Bidding Documents of CN-02/083-84/NCB/Works/C/WSSMOBTL

Office Chief

सार्वजनिक खरिद ऐन २०६३ को दफा ६५ को उपदफा (१) को खण्ड (ग) ले दिएको अधिकार बमोजिम
सार्वजनिक खरिद अनुगमन कार्यालयबाट जारी गरिएको

(Issued by the Public Procurement Monitoring Office in accordance with the authority given by clause (c) of Subsection (1) of Section 65 of the Public Procurement Act, 2063)

STANDARD BIDDING DOCUMENT (SBD)

Procurement of

Construction of Entire Works of Imiliya Water Supply Project, Buddhabhumi-09, Kapilvastu

National Competitive Bidding (NCB)

Single-Stage: Two-Envelope Bidding Procedure

[Procurement of value above NRs. 20 Million]

Government of Nepal

Ministry of Infrastructure Development

Department of water Supply and Sewerage Management

Water Supply and Sewerage Management Office,
Butwal, Rupandehi

Issued on: 28th September, 2026
Issued to: All Eligible Bidders
Invitation for Bids No.: BTL/01/083-84
Contract Identification No.: 02/083-84/NCB/Works/C/WSSMOBTL

Government of Nepal
Ministry of Urban Development
Department of Water Supply and Sewerage Management
Office
Butwal, Rupandehi
Bidding Documents of CN-02/083-84/NCB/Works/C/WSSMOBTL
Office Chief

Guidance Notes on the Use of

The Standard Bidding Document (SBD)

This Standard Bidding Document for Procurement of Works, has been prepared by the Government of Nepal (GoN), Public Procurement Monitoring Office (PPMO) to facilitate Single-Stage: Two-Envelope Bidding Procedures used for the procurement of Works through National competitive bidding (NCB) procedure (Procurement of value above NRs. 20 million) and is applicable to all the Public Entities as defined in the Public Procurement Act, 2063.

Guidance notes in the Standard Bidding Document within the left square bracket and right square bracket and guidance footnotes are intended as information for preparing the bidding documents and hence should be deleted in the final document.

This document has 10 Sections, of which Section I (Instructions to Bidders) and Section VIII (General Conditions of Contract) must not be altered or modified under any circumstances. The Invitation for Bid (IFB) is a copy for advertisement that provides relevant and essential information to help the Bidders to decide whether or not to participate in the particular bidding process; this is provided in the Biding Document for information only.

The Procuring Entity should provide its specific needs in the Bid Data Sheet (BDS), the Special Conditions of Contract (SCC) and the detailed requirements of the procurement in the Works Requirements.

This Standard Bidding Document, when properly completed should provide all the information that a Bidder needs in order to prepare and submit a bid. This should also provide a sound basis on which a Procuring Entity can fairly, transparently and accurately carry out evaluation of the Bids received from the bidders.

The Procuring Entity, before publishing the Invitation for Bids, should identify and approve from the competent authority the procurement requirements, its technical features, and cost estimate. Furthermore, the Procuring Entity should keep in mind the availability of the budget and possible slicing and packaging of the procurement requirements.

If any amendments on Public Procurement Act, 2063 or Public Procurement Regulation, 2064 are made, the Procuring Entity shall incorporate such amendments when preparing a particular Bidding Document.

Brief description of different sections of the Standard Bidding Document and how a Procuring Entity should use these when preparing a particular Bidding Document is detailed below:

Government of Nepal
Ministry of Infrastructure and Transport Development
Department of Water Supply and Sewerage Management Office
Water Supply and Sewerage Management Office
Butwal, Rupandehi
Office Chief

SECTION I
Instructions to Bidders (ITB)

This Section provides relevant information to help the Bidders to prepare their Bids. Information is also provided on the submission, opening, and evaluation of Bids and on the award of Contract.

The Instructions to Bidders (ITB) specify the procedures that regulate the bidding process. The ITB contain standard provisions that have been designed to remain unchanged and to be used without modifying their text. The ITB clearly identify the provisions that may need to be specified for a particular bidding process and require that such specification be introduced through the BDS.

The Instructions to Bidders are not a Contract document and, therefore, are not a part of the Contract.

SECTION II
Bid Data Sheet (BDS)

The Bid Data Sheet (BDS) contains information and provisions that are specific to each bidding process. The Employer must specify in the BDS provisions that supplement the information and requirements specified in Section I, Instructions to Bidders. All information shall be provided; no clause shall be left blank.

To facilitate the preparation of the BDS, the clauses in the BDS format are numbered with the same numbers as the corresponding ITB clauses. The instructions included in the BDS are to guide the Employer on how to enter all required information.

SECTION III
Evaluation and Qualification Criteria (EQC)

The purpose of the Evaluation and Qualification Criteria (EQC) is to specify the criteria that determine the substantially responsive bid closest to the Average Bid Price and the qualifications of the Bidder to perform the contract. The Procuring Entity shall prepare the EQC by taking into account the nature, quantity and or amount of the procurement and include it as a part of the Bidding Document. In determining the Evaluation and Qualification Criteria, the Procuring Entity shall follow the guidance incorporated on this section and shall not limit the competition or make onerous criteria.

The EQC is not a part of the Contract document.

Office Chief

SECTION IV
Bidding Forms

This Section contains the forms which are to be completed by the Bidder and submitted as part of his Bid.

This Section provides the standard format for the Letter of Technical and Price Bid, table of price adjustment data, Bid Security Form, Technical proposal form, Bidder's information and qualification forms to be submitted by the Bidder.

SECTION V
Eligible Countries

This section contains the list of eligible countries. The procuring entity shall mention the list of eligible countries as per the instructions provided in this section.

SECTION VI
Works Requirements

This section contains the volumes of information that describe the Works to be constructed and includes Specification, the Drawings, and supplementary information that describe the Works to be procured Personnel Requirements and Equipment Requirements.

SECTION VII
Bill of Quantities (BOQ)

This Section provides estimated information on the itemized quantities in sufficient detail to distinguish between the different classes of Works to be performed by the bidder and enable to the Bidder to prepare priced bill of quantities efficiently and accurately.

SECTION VIII
General Conditions of Contract (GCC)

The GCC contain standard provisions that have been designed to remain unchanged and to be used without modifying their text. This Section provides the General Conditions of Contract that will apply to the Contract for which the Biding document is issued. The GCC clearly identify the provisions that

Office Chief
Government of Nepal
Ministry of Infrastructure Development
Department of Water Supply and Sewerage Management
Water Supply and Sewerage Management Office
Butwal, Rupandehi

may normally need to be specified for a particular bidding process and require that such information be introduced through the SCC

SECTION IX
Special Conditions of Contract (SCC)

The contents of this Section supplement Section VIII: General Conditions of Contract. The Special Conditions of Contract shall be prepared by the Procuring Entity.

The Special Conditions of Contract (SCC) contain provisions that the GCC require be specified for a particular bidding process. The Employer should include at the time of issuing the Bidding Document, all information that the GCC indicate shall be provided in the SCC. No SCC Clause should be left blank.

To facilitate the preparation of the SCC, the Clauses in the SCC format are numbered with same numbers as the corresponding GCC Clauses. The instructions included in the SCC are to guide the Employer to provide the required information.

The SCC is a part of the Contract Document; therefore, the Procuring Entity shall provide the information in appropriate manner as indicated in the SCC.

SECTION X
Contract Forms

This Section contains the Sample format for Letter of Intent, Letter of Acceptance, Contract Agreement Form, the forms for Performance Security, Advance Payment Security and Retention Money Security.

Office Chief

BIDDING DOCUMENT

for

THE PROCUREMENT OF

Construction of Entire Works of Imiliya Water Supply Project, Buddhabhumi-09, Kapilvastu

National Competitive Bidding (NCB)

Single-Stage: Two-Envelope Bidding Procedure

Water Supply and Sewerage Management Office, Butwal, Rupandehi

Issued on: 28th September, 2026
Issued to: All Eligible Bidders
Invitation for Bids No.: BTL/01/083-84
Contract Identification No.: 02/083-84/NCB/Works/C/WSSMOBTL

Office Chief

Abbreviations

BD ... Bidding Document

BDF ... Bidding Forms

BDS ... Bid Data Sheet

BOQ ... Bill of Quantities

COF ... Contract Forms

DP ... Development Partners

DWSSM ... Department of Water Supply and Sewerage Management

WSSMO ... Water Supply and Sewerage Management Office

e-GP ... Electronic Government Procurement

ELI ... Eligibility

EQC ... Evaluation and Qualification Criteria

EXP ... Experience

FIN ... Financial

GCC ... General Conditions of Contract

GoN[1] ... Government of Nepal

ICC ... International Chamber of Commerce

IFB ... Invitation for Bids

ITB ... Instructions to Bidders

JV ... Joint Venture

LIT ... Litigation

NCB ... National Competitive Bidding

NRs. ... Nepalese Rupees

PAN ... Permanent Account Number

PPA ... Public Procurement Act

PPMO ... Public Procurement Monitoring Office

PPR ... Public Procurement Regulations

PL ... Profit & Loss

PS ... Provisional Sum

SBD ... Standard Bidding Document

SCC ... Special Conditions of Contract

TS ... Technical Specifications

VAT ... Value Added Tax

WRQ ... Works Requirements

[1] "GoN" word indicates all public entities according to Public Procurement Act, 2063

Office Chief

Table of Contents

Invitation for Bids 4

Part I: BIDDING PROCEDURES 6

Section I: Instructions to Bidders 9

Section II : Bid Data Sheet 33

Section III: Evaluation and Qualification Criteria 36

Section IV: Bidding Forms 47

Section V - Eligible Countries 73

Part II : REQUIREMENT 74

Section VI: Works Requirements 76

Section VI: Bill of Quantities 82

Part III: CONDITIONS OF CONTRACT AND CONTRACT FORMS 91

Section VIII: General Conditions of Contract 95

Section IX: Special Conditions of Contract 124

Section X: Contract Forms 129

Office Chief

Invitation for Bids

Government of Nepal (GoN)

Ministry of Infrastructure Development

Department of water Supply and Sewerage Management

Water Supply and Sewerage Management Office,

Butwal, Rupandehi

Invitation for Bids No: BTL/01/083-84

Date of publication: 28th September, 2026

1. ***The Government of Nepal [GoN] has allocated funds*** towards the cost of ***Construction of Entire Works of Imiliya Water Supply Project, Buddhabhumi-09, Kapilvastu*** and intends to apply part of the funds to cover eligible payments under the Contract ***for 02/083-84/NCB/Works/C/WSSMOBTL***. Bidding is open to all eligible as per Section V of bidding document.

2. ***Water Supply and Sewerage Management Office, Butwal, Rupandehi*** invites sealed bids from eligible bidders for the ***Construction of Entire Works of Imiliya Water Supply Project, Buddhabhumi-09, Kapilvastu*** under National Competitive Bidding – Single Stage Two Envelope Bidding procedures.

   Only eligible bidders with the following key qualifications should participate in this bidding:

   - Minimum Average Annual Construction Turnover of the best 3 years within the last 10 years: ***NRs 116,345,000.00***
   - Minimum Work experience of similar size and nature: Participation as Prime Contractor/Management Contractor/Subcontractor in, ***1(One) no. of Water Supply Project/Water Quality Improvement Project/Sewerage Management Project/Wastewater Treatment Project/Stormwater Drainage Project*** having Value ***at least NRs. 93,076,000.00*** within ten (10) years, that have been successfully or are substantially completed.

3. Under the Single Stage, Two Envelope Procedure, Bidders are required to submit simultaneously two separate sealed envelopes, one containing (i) the Technical Bid and the other (ii) the Price Bid, both in turn enclosed in one sealed envelope as per the provision of ITB 21 of the Bidding Document.

   Eligible Bidders may obtain further information and inspect the Bidding Documents at the office of ***Water Supply and Sewerage Management Office, Butwal, Rupandehi,***
   Phone no.: 071-420518 / 9857078518, email: fwssmpbutwal@gmail.com

4. A complete set of Bidding Documents may be purchased from the office ***Water Supply and Sewerage Management Office, Butwal, Rupandehi by*** eligible Bidders on the submission of a written application, along with the *copy of company/firm registration certificate*, and upon payment of a non-refundable fee of ***NRs.10000.00 till 27th October, 2026 during office hours*** in the account as specified below.

   Information to deposit the cost of bidding document in Bank:

   Name of the Bank: Agricultural Development Bank
   Name of Office: ***Water Supply and Sewerage Management Office, Butwal***
   Office Code no.: 337054801 Account no.: 0100201277009016
   Rajaswa (revenue) Shirshak no.: 14229

Office Chief

5. Pre-bid meeting shall be held at ***Water Supply and Sewerage Management Office, Butwal*** at ***8th October, 2026, 13:00 Hrs.***

6. Sealed bids must be submitted to the office ***Water Supply and Sewerage Management Office, Butwal*** by hand/courier on or before ***12:00 Hrs*** on ***28th October, 2026.*** Bids received after this deadline will be rejected.

7. The bids will be opened in the presence of Bidders' representatives who choose to attend at ***13:00 Hrs on 28th October, 2026*** at the office of ***Water Supply and Sewerage Management Office, Butwal***. Bids must be valid for a period of ***90 days from*** the bid submission deadline and must be accompanied by a bid security, amounting to a minimum of **NRs. 3,900,000.00**, which shall be valid for 30 days beyond the validity period of the bid ***(i.e 24th Feb., 2027).***

8. If the last date of purchasing and /or submission falls on a government holiday, then the next working day shall be considered as the last date. In such case the validity period of the bid and bid security shall remain the same as specified for the original last date of bid submission.

Office Chief

Part I: BIDDING PROCEDURES

Bidding Documents of CS-02/083-84/NCB/Works/C/Ward SSMC&BTL
Office Chief
Government of Nepal, Ministry of Public Works and Transport Management, Department of Water Supply and Sewerage Management, Water Supply and Sewerage Management Office, Butwal, Rupandehi

Section I: Instructions to Bidders (ITB)

This section specifies the procedures to be followed by Bidders in the preparation and submission of their Bids. Information is also provided on the submission, opening, and evaluation of bids and on the award of contract.

Table of Clauses

A. General **9**
1. Scope of Bid 9
2. Source of Funds 9
3. Fraud and Corruption 9
4. Eligible Bidders 11
5. Eligible Materials, Equipment and Services 13

B. Contents of Bidding Documents **13**
6. Sections of Bidding Document 14
7. Clarification of Bidding Document, Site Visit, Pre-Bid Meeting 14
8. Amendment of Bidding Document 15
9. Cost of Bidding 15
10. Language of Bid 15
11. Documents Comprising the Bid 15
12. Letter of Bid and Schedules 16
13. Alternative Bids 16
14. Bid Prices and Discounts 17
15. Currency of Bid and Payment 17
16. Documents Comprising the Technical Proposal 17
17. Documents Establishing the Qualifications of the Bidder 18
18. Period of Validity of Bids 18
19. Bid Security 18
20. Format and Signing of Bid 19

D. Submission and Opening of Bids **20**
21. Sealing and Marking of Bids 20
22. Deadline for Submission of Bids 22
23. Late Bids 22
24. Withdrawal, and Modification of Bids 22

Office Chief

25. Bid Opening 24
E. Evaluation and Comparison of Bids 25
26. Confidentiality 25
27. Clarification of Bids 25
28. Deviations, Reservations, and Omissions 26
29. Examination of Technical Bid 26
30. Determination of Responsiveness of Technical Bid 26
31. Non-conformities Errors, and Omissions 27
32 Eligibility and Qualification of the Bidder 27
33. Correction of Arithmetical Errors 27
34 Subcontractors 28
35. Evaluation of Price Bids 28
36. Comparison of Bids 29
37. Employer's Right to Accept Any Bid, and to Reject Any or All Bids 30
38. Award Criteria 30
39. Letter of Intent to Award the Contract/Notification of Award 30
40. Performance Security 30
41 Signing of Contract 31
42. Complaint and Review 31

Section I: Instructions to Bidders

A. General	
1. Scope of Bid	1.1 In connection with the Invitation for Bids **indicated in the Bid Data Sheet (BDS)**, the Employer, **as indicated in the BDS**, issues this Bidding Document for the procurement of Works as specified in Section VI (Works Requirements). The name, identification, and number of lots (contracts) / multiple contracts of the National Competitive Bidding (NCB) are **provided in the BDS.**
	1.2 Throughout this Bidding Document: (a) the term "in writing" means communicated in written form and delivered against receipt through e-GP system or email or fax or courier; (b) except where the context requires otherwise, words indicating the singular also include the plural and words indicating the plural also include the singular; and (c) "day" means calendar day.
2. Source of Funds	2.1 GoN Funded: In accordance with its annual program and budget, approved by the GoN, the implementing agency **indicated in the BDS** plans to apply a portion of the allocated budget to eligible payments under the contract(s) for which this Bidding Document is issued. Or Public Entities' own Resource Funded: In accordance with its annual program and budget, approved by the public entity, the implementing agency **indicated in the BDS** plans to apply a portion of the allocated budget to eligible payments under the contract(s) for which this Bidding Document is issued. Or DP Funded: The GoN has applied for or received financing (hereinafter called "funds") from the Development Partner (hereinafter called "the DP") **indicated in the BDS** toward the cost of the project named in the BDS. The GoN intends to apply a portion of the funds to eligible payments under the contract(s) for which this Bidding Document is issued.
	2.2 DP Funded: Payment by the DP will be made only at the request of the GoN and upon approval by the DP in accordance with the terms and conditions of the financing agreement between the GoN and the DP (hereinafter called the "Loan/Grant Agreement"), and will be subject in all respects to the terms and conditions of that Loan/Grant Agreement. No party other than the GoN shall derive any rights from the Loan Agreement or have any claim to the funds.
3. Fraud and Corruption	3.1 Procuring Entities as well as Bidders, suppliers and contractors and their sub-contractors shall adhere to the highest standard of ethics during the procurement and execution of such contracts. In pursuance of this; (a) the Employer adopts, for the purposes of this provision, the terms as defined below: (i) "corrupt practice" means the offering, giving, receiving, or soliciting, directly or indirectly, anything of value to influence improperly the actions of another party;

(ii) "fraudulent practice" means any act or omission, including a misrepresentation, that knowingly or recklessly misleads, or attempts to mislead, a party to obtain a financial or other benefit or to avoid an obligation;

(iii) "coercive practice" means impairing or harming, or threatening to impair or harm, directly or indirectly, any party or the property of the party to influence improperly the actions of a party;

(iv) "collusive practice" means an arrangement between two or more parties designed to achieve an improper purpose, including influencing improperly the actions of another party.

v) "obstructive practice" means (a) deliberately destroying, falsifying, altering, or concealing of evidence material to an investigation; (b) making false statements to investigators in order to materially impede an investigation; (c) failing to comply with requests to provide information, documents, or records in connection with an investigation; (d) threatening, harassing, or intimidating any party to prevent it from disclosing its knowledge of matters relevant to the investigation or from pursuing the investigation; or (e) materially impeding GoN/DP's contractual rights of audit or access to information; and

vi) "integrity violation" is any act which violates Anticorruption Policy, including (i) to (v) above and the following: abuse, conflict of interest, violations of GoN/DP sanctions, retaliation against whistleblowers or witnesses, and other violations of Anticorruption Policy, including failure to adhere to the highest ethical standard.

(b) the Employer will reject a proposal for award if it determines that the Bidder recommended for award has, directly or through an agent, engaged in corrupt, fraudulent, collusive, coercive, or obstructive practices or other integrity violations in competing for the contract;

(c) DP will cancel the portion of the financing allocated to a contract if it determines at any time that representative(s) of the GoN/or of a beneficiary of DP-financing engaged in corrupt, fraudulent, collusive, or coercive practices or other integrity violations during the procurement or the execution of that contract, without the GoN having taken timely and appropriate action satisfactory to DP to remedy the situation.

d) DP will impose remedial actions on a firm or an individual, at any time, in accordance with DP's Anticorruption Policy and related Guidelines (as amended from time to time), including declaring ineligible, either indefinitely or for a stated period of time, to participate in DP-financed, -administered, or -supported activities or to benefit from an DP-financed, -administered, or -supported contract, financially or otherwise, if it at any time determines that the firm or individual has, directly or through an agent, engaged in corrupt, fraudulent, collusive, coercive, or obstructive practices or other integrity violations; and

(e) The Contractor shall permit the GoN/DP to inspect the Contractor's accounts and records relating to the performance of the Contractor and to have them audited by auditors appointed by the GoN /DP, if so, required by the GoN/DP.

3.2 The Bidder shall not carry out or cause to carry out the following acts with an intention to influence the implementation of the procurement process or the procurement agreement:
(a) give or propose improper inducement directly or indirectly,
(b) distortion or misrepresentation of facts,
(c) engaging in corrupt or fraudulent practice or involving in such act,
(d) interference in participation of other competing bidders,
(e) coercion or threatening directly or indirectly to cause harm to the person or the

Office Chief

	property of any person to be involved in the procurement proceedings, (f) collusive practice among bidders before or after submission of bids for distribution of works among bidders or fixing artificial/uncompetitive bid price with an intention to deprive the Employer the benefit of open competitive bid price, (g) Contacting the Employer with an intention to influence the Employer with regards to the bids or interference of any kind in examination and evaluation of the bids during the period from the time of opening of the bids until the notification of award of contract.
	3.3 PPMO, on the recommendation of the Procuring Entity may blacklist a Bidder for a period of one (1) to three (3) years for its conduct including on the following grounds and seriousness of the act committed by the bidder: (a) if convicted by a court of law in a criminal offence which disqualifies the Bidder from participating in the contract, (b) if it is established that the contract agreement signed by the Bidder was based on false or misrepresentation of Bidder's qualification information, (c) if it at any time determines that the firm has, directly or through an agent, engaged in corrupt, fraudulent, collusive, coercive, or obstructive practices in competing for, or in executing, a GoN/DP-financed contract. (d) if the Successful Bidder fails to sign the Contract. (e) if the bidder fails to inform or informs after the specified time about the saturation of the maximum number of contracts as per ITB 4.10. (f) a Bidder requests for withdrawal or modification of its bid: (i) after the Bid Submission deadline and during the period of validity specified by the Bidder on the Letter of Technical Bid and Price Bid, in case of electronic submission; (ii) from the period twenty-four hours prior to bid submission deadline up to the period of bid validity specified by the Bidder on the Letter of Technical Bid and Price Bid, in case of hard copy submission. (g) if the bidder does not provide clarifications of its Bid by the date and time set in the Employer's request for clarification as per ITB 27.1. (h) a Bidder changes the prices or substance of the bid while providing information pursuant to ITB 27.1.
	3.4 A bidder declared blacklisted and ineligible by the GoN, Public Procurement Monitoring Office (PPMO), by a competent authority under the prevailing law for failure to repay a loan disbursed by a bank or financial institution, and/or the DP in case of DP funded project, shall be ineligible to bid for a contract during the period of time determined by the GoN, PPMO, the competent authority, and/or the DP.
	3.5 In case of a natural person or firm/institution/company which is already declared blacklisted and ineligible by the GoN, any other new or existing firm/institution/company owned partially or fully by such Natural person or Owner or Board of director of blacklisted firm/institution/company; shall not be eligible bidder.
	3.6 Furthermore, Bidders shall be aware of the provisions of GCC 28.3 and GCC 72.3(j).
4. Eligible Bidders	4.1 A Bidder may be a natural person, private entity, or government owned entity subject to ITB 4.5 or any combination of them in the form of a Joint Venture (JV) under an existing agreement, or with the intent to constitute a legally-enforceable joint venture. In the case of a JV: (a) all partners shall be jointly and severally liable for the execution of the Contract

Office Chief

in accordance with the Contract terms. Maximum number of JV shall be as **specified in the BDS** and

(b) the JV shall nominate a Representative who shall have the authority to conduct all business for and on behalf of any and all the parties of the JV during the bidding process and, in the event the JV is awarded the Contract, during Contract execution.

4.2 A Bidder, and all parties constituting the Bidder, shall have the nationality of an eligible country, in accordance with Section V (Eligible Countries). A Bidder shall be deemed to have the nationality of a country if the Bidder is a citizen or is constituted, or incorporated, and operates in conformity with the provisions of the laws of that country. This criterion shall also apply to the determination of the nationality of proposed sub-contractors or suppliers for any part of the Contract including related services.

4.3 A Bidder shall not have a conflict of interest. A Bidder found to have a conflict of interest shall be disqualified. A Bidder may be considered to be in a conflict of interest with one or more parties in this bidding process, if any of, including but not limited to, the following apply:

(a) they have controlling shareholders in common; or

(b) they receive or have received any direct or indirect subsidy from any of them; or

(c) they have the same legal representative for purposes of this bid; or

(d) they have a relationship with each other, directly or through common third parties, that puts them in a position to have access to material information about or improperly influence the Bid of another Bidder, or influence the decisions of the Employer regarding this bidding process; or

(e) a Bidder participates in more than one bid in this bidding process either individually or as a partner in a joint venture. This will result in the disqualification of all Bids in which it is involved. However, subject to any finding of a conflict of interest in terms of ITB 4.3 (a)-(d) above, this does not limit the participation of the same subcontractor in more than one bid; or

(f) a Bidder or any of its affiliated entity, participated as a consultant in the preparation of the design or technical specifications of the works that are the subject of the Bid; or

(g) a Bidder was affiliated with a firm or entity that has been hired (or is proposed to be hired) by the Employer as Engineer for the Contract.

(h) a Bidder that has a close business or family relationship with a professional staff of the Procuring Entity.

4.4 A firm that is under a declaration of ineligibility by the GoN in accordance with ITB 3, at the date of the deadline for bid submission or thereafter, shall be disqualified. A firm shall not be eligible to participate in any procurement activities under an DP-financed, -administered, or -supported project while under temporary suspension or debarment by DP pursuant to the DP's Anticorruption Policy (see ITB 3), whether such debarment was directly imposed by the DP, or enforced by other DPs pursuant to the Agreement for Mutual Enforcement of Debarment Decisions. A bid from a temporary suspended or debarred firm will be rejected.

4.5 Enterprises owned by Government shall be eligible only if they can establish that they are legally and financially autonomous and operate under commercial law, and that they are not a dependent agency of the GoN.

	4.6 Bidders shall provide such evidence of their continued eligibility satisfactory to the Employer, as the Employer shall reasonably request.
	4.7 Firms shall be excluded in any of the cases, if (a) by an act of compliance with a decision of the United Nations Security Council taken under Chapter VII of the Charter of the United Nations, Nepal prohibits any import of goods or contracting of works or services from that country or any payments to persons or entities in that country. Where Nepal prohibits payments to a particular firm or for particular goods by such an act of compliance, that firm may be excluded; (b) DP Funded: as a matter of law or official regulation, Nepal prohibits commercial relations with that country, provided that the DP is satisfied that such exclusion does not preclude effective competition for the supply of goods or related services required; (c) DP Funded: a firm sanctioned or temporarily suspended by the DP in relation to their guidelines or appropriate provisions on preventing and combating fraud and corruption in projects financed by them.
	4.8 In case a prequalification process has been conducted prior to the bidding process, this bidding is open only to prequalified Bidders.
	4.9 The Bidder, including all parties constituting the Bidder, shall be ineligible to participate in the open competitive bidding process if it has already secured maximum number of construction contracts (in open competitive bidding) **as specified in BDS** and has not yet completed the work as stipulated in the respective contracts
	4.10 For the purpose of ITB 4.9 above, the bidder shall declare that the bidder, and all parties constituting the Bidder have not already secured maximum number of construction contract (in open competitive bidding) **as specified in BDS**. If the bidder, and all parties constituting the Bidder has participated in bidding processes of many public entities and during that period the maximum number of contracts have been attained as specified saturates due to issuance of letters of acceptance by a particular public entity, the bidder shall inform in writing to all other concerned public entities, where the bidder have participated in bidding process, within three days of issuance of last letter of acceptance that saturates the maximum number of contracts as specified.
5. Eligible Materials, Equipment and Services	5.1 The materials, equipment and services to be supplied under the Contract shall have their origin in any source countries as defined in accordance with Section V (Eligible Countries) and all expenditures under the Contract will be limited to such materials, equipment, and services. At the Employer's request, Bidders may be required to provide evidence of the origin of materials, equipment and services.
	5.2 For purposes of ITB 5.1 above, "origin" means the place where the materials and equipment are mined, grown, produced or manufactured, and from which the services are provided. Materials and equipment are produced when, through manufacturing, processing, or substantial or major assembling of components, a commercially recognized product results that differs substantially in its basic characteristics or in purpose or utility from its components.
B. Contents of Bidding Documents	

6. Sections of Bidding Document	6.1 The Bidding Document consist of Parts I, II, and III, which include all the Sections indicated below, and should be read in conjunction with any Addenda issued in accordance with ITB 8. PART I Bidding Procedures Section I — Instructions to Bidders (ITB) Section II — Bid Data Sheet (BDS) Section III — Evaluation and Qualification Criteria (EQC) Section IV — Bidding Forms (BDF) Section V — Eligible Countries PART II Requirements Section VI — Works Requirements (WRQ) Section VII — Bill of Quantities (BOQ) PART III Conditions of Contract and Contract Forms Section VIII — General Conditions of Contract (GCC) Section IX — Special Conditions of Contract (SCC) Section X — Contract Forms (COF)
	6.2 The Invitation for Bids (IFB) issued by the Employer is not part of the Bidding Document.
	6.3 The Employer is not responsible for the completeness of the Bidding Document and their Addenda, if they were not obtained directly from the source stated by the Employer in the Invitation for Bids.
	6.4 The Bidder is expected to examine all instructions, forms, terms, and specifications in the Bidding Document and to furnish with its bid all information and documentation as is required by the Bidding Documents. Failure to furnish all information or documentation required by the Bidding Document may result in the rejection of the bid.
7. Clarification of Bidding Document, Site Visit, Pre-Bid Meeting	7.1 A prospective Bidder requiring any clarification of the Bidding Document shall contact the Employer in writing at the Employer's address **indicated in BDS** or raise any question or curiosity during the pre-bid meeting if provided for in accordance with ITB 7.4. The Employer will respond in writing to any request for clarification, provided that such request is received within the period as mentioned in ITB 7.5. The Employer shall forward copies of its response to all Bidders who have acquired the Bidding Document in accordance with ITB 6.3, including a description of the inquiry but without identifying its source. Should the Employer deem it necessary to amend the Bidding Document as a result of a request for clarification, it shall do so following the procedure under ITB 8 and ITB 22.2.
	7.2 The Bidder is advised to visit and examine the Site of Works and its surroundings and obtain for itself, on its own risk and responsibility, all information that may be necessary for preparing the bid and entering into a Contract for construction of the Works. The costs of visiting the Site shall be at the Bidder's own expense.
	7.3 The Bidder and any of its personnel or agents will be granted permission by the Employer to enter upon its premises and lands for the purpose of such visit, but only upon the express condition that the Bidder, its personnel, and agents will release and indemnify the Employer and its personnel and agents from and against all liability in respect thereof, and will be responsible for death or personal injury, loss of or damage to property, and any other loss, damage, costs, and expenses incurred as a result of the inspection.

Office Chief

	7.4 The Bidder's designated representative is invited to attend a pre-bid meeting, if **provided for in the BDS**. The purpose of the meeting will be to clarify issues and to answer questions on any matter that may be raised at that stage.
	7.5 The Bidder is requested, to submit any questions in writing, to reach the Employer as **mentioned in BDS.**
	7.6 Minutes of the pre-bid meeting, including the text of the questions raised, without identifying the source, and the responses given, together with any responses prepared after the meeting, will be transmitted promptly to all Bidders who have acquired the Bidding Document in accordance with ITB 6.3. Any modification to the Bidding Document that may become necessary as a result of the pre-bid meeting shall be made by the Employer exclusively through the issue of an addendum pursuant to ITB 8 and not through the minutes of the pre-bid meeting.
	7.7 Nonattendance at the pre-bid meeting will not be a cause for disqualification of a Bidder.
8. Amendment of Bidding Document	8.1 At any time prior to the deadline for submission of bids, the Employer may amend the Bidding Document by issuing addendum or several addenda.
	8.2 Any addendum issued shall be part of the Bidding Document and shall be communicated in writing to all who have obtained the Bidding Document from the Employer in accordance with ITB 6.3.
	8.3 To give prospective Bidders reasonable time in which to take an addendum into account in preparing their Bids, the Employer may, at its discretion, extend the deadline for the submission of Bids, pursuant to ITB 22.2. However, the time available to submit bids shall not be less than five (5) days since amendment in bidding document.
	C. Preparation of Bids
9. Cost of Bidding	9.1 The Bidder shall bear all costs associated with the preparation and submission of its Bid, and the Employer shall in no case be responsible or liable for those costs, regardless of the conduct or outcome of the bidding process.
10. Language of Bid	10.1 The Bid, as well as all correspondence and documents relating to the bid exchanged by the Bidder and the Employer, shall be written in the language **specified in the BDS**. Supporting documents and printed literature that are part of the Bid may be in another language provided they are accompanied by an accurate translation of the relevant passages in the language **specified in the BDS**, in which case, for purposes of interpretation of the Bid, such translation shall govern.
11. Documents Comprising the Bid	11.1 The Bid shall comprise two envelopes submitted simultaneously, one called the Technical Bid containing the documents listed in ITB 11.2 and the other the Price Bid containing the documents listed in ITB 11.3, both envelopes enclosed together in an outer single envelope. 11.2 The Technical Bid shall comprise the following: (a) Letter of Technical Bid; (b) Bid Security in accordance with ITB 19;

	(c) alternative Technical Bid, at Bidder's option and if permissible, in accordance with ITB 13; (d) written confirmation authorizing the signatory of the Bid to commit the Bidder, in accordance with ITB 20.2; (e) documentary evidence in accordance with ITB 17, establishing the Bidder's qualifications to perform the contract; (f) Technical Proposal in accordance with ITB 16; (g) Bids submitted by a Joint Venture shall include a copy of the Joint Venture Agreement entered into by all partners. Alternatively, a Letter of Intent to execute a Joint Venture Agreement in the event of a successful Bid shall be signed by all partners and submitted with the Bid, together with a copy of the proposed agreement. The Joint Venture agreement, or letter of intent to enter into a Joint Venture including a draft agreement shall indicate at least the parts of the Works to be executed by the respective partners; (h) list of subcontractors, in accordance with ITB 34 (If any); and (i) Any other documents required in the **BDS.** 11.3 The Price Bid shall comprise the following: (a) Letter of Price Bid; (b) completed Bill of Quantities (BoQ), in accordance with ITB 12 and ITB 14, or as stipulated in the BDS; (c) alternative price Bids, at Bidder's option and if permissible, in accordance with ITB 13; (d) Table of Price adjustment (if applicable) ; and (e) Any other document required in the **BDS**.
	11.4 The Bidder is solely responsible for the authenticity of the submitted documents. 11.5 The Technical Bid shall not include any financial information related to the Price Bid. A Technical Bid containing such material financial information shall be declared non-responsive.
12. Letter of Bid and Schedules	12.1 The Letters of Technical Bid and Price Bid, Schedules, and all documents listed under ITB 11, shall be prepared using the relevant forms in Section IV (Bidding Forms) and in Section VII (Bill of Quantities). The forms must be completed without any alterations to the text, and no substitutes shall be accepted. All blank spaces shall be filled in with the information requested.
13. Alternative Bids	13.1 Unless otherwise **specified in the BDS**, alternative bids shall not be considered.
	13.2 When alternative times for completion are explicitly invited, a statement to that effect will be **included in the BDS**, as will the method of evaluating different times for completion.
	13.3 When specified in the BDS pursuant to ITB 13.1, and subject to ITB 13.4 below, Bidders wishing to offer technical alternatives to the requirements of the Bidding Document must first price the Employer's design as described in the Bidding Document and shall further provide all information necessary for a complete evaluation of the alternative by the Employer, including drawings, design calculations, technical specifications, breakdown of prices, and proposed construction methodology and other relevant details. Only the technical alternatives, if any, of the evaluated Bidder whose Bid

	Price is closest to the Average Bid Price conforming to the basic technical requirements shall be considered by the Employer.
	13.4 When **specified in the BDS**, Bidders are permitted to submit alternative technical solutions for specified parts of the Works. Such parts will be **identified in the BDS** and described in Section VI (Works Requirements). The method for their evaluation will be stipulated in Section III (Evaluation and Qualification Criteria).
14. Bid Prices and Discounts	14.1 The prices and discounts quoted by the Bidder in the Letter of Price Bid and in the Schedules shall conform to the requirements specified below.
	14.2 The Bidder shall submit a bid for the whole of the works described in ITB 1.1 by filling in prices for all items of the Works, as identified in Section VII (Bill of Quantities). In case of Unit Rate Contracts, the Bidder shall fill in rates and prices for all items of the Works described in the Bill of Quantities. Items against which no rate or price is entered by the Bidder will not be paid for by the Employer when executed and shall be deemed covered by the rates for other items and prices in the Bill of Quantities.
	14.3 The price to be quoted in the Letter of Price Bid shall be the total price of the Bid, excluding any discounts offered. Absence of the total price in the Letter of Price Bid may result in rejection of the Bid.
	14.4 The Bidder shall quote any discounts and the methodology for their application in the Letter of Price Bid, in accordance with ITB 12.1.
	14.5 If so indicated in ITB 1.1and ITB 35.4, bids are invited for individual Contracts or for any combination of Contracts (packages). Bidders wishing to offer any price reduction for the award of more than one Contract shall specify in their bid the price reductions applicable to each package, or alternatively, to individual Contracts within the package. Price reductions or discounts shall be submitted in accordance with ITB 14.4, provided the Bids for all Contracts are submitted and opened at the same time.
	14.6 Unless otherwise **provided in the BDS** and the Conditions of Contract, the prices quoted by the Bidder shall be fixed. If the prices quoted by the Bidder are subject to adjustment during the performance of the Contract in accordance with the provisions of the Conditions of Contract, the Bidder shall furnish the indices and weightings for the price adjustment formulae in the Table of Adjustment Data in Section IV (Bidding Forms) and the Employer may require the Bidder to justify its proposed indices and weightings.
	14.7 All duties, taxes, and other levies payable by the Contractor under the Contract, or for any other cause, as of the date 30 days prior to the deadline for submission of bids, shall be included in the rates and prices and the total bid price submitted by the Bidder.
15. Currency of Bid and Payment	15.1 The currency of the bid and payment shall be in Nepalese Rupees.
16. Documents Comprising the Technical	16.1 The Bidder shall furnish a Technical Proposal including a statement of work methods, equipment, personnel, schedule and any other information as stipulated in Section IV (Bidding Forms), in sufficient detail to demonstrate the adequacy of the Bidders' proposal to meet the work requirements and the completion time.

Office Chief

Proposal	
17. Documents Establishing the Qualifications of the Bidder	17.1 To establish its qualifications to perform the Contract in accordance with Section III (Evaluation and Qualification Criteria) the Bidder shall provide the information requested in the corresponding information sheets included in Section IV (Bidding Forms).
18. Period of Validity of Bids	18.1 Bids shall remain valid for the period **specified in the BDS.** The bid validity period shall start from the bid submission deadline as prescribed by the Employer in accordance with ITB 22.1. If the prescribed bid submission deadline date falls on a government holiday, then the next working day shall be considered as the bid submission deadline date. In such case the validity period of the bids shall be considered from the original bid submission deadline date. In the case of electronic bid submission, if any technical issue arises in the handling of the e-GP system, the PPMO may extend the deadline for bid submission. However, the validity period of the bids shall still be counted from the original bid submission deadline. A bid valid for a shorter period shall be rejected by the Employer as nonresponsive.
	18.2 In exceptional circumstances, prior to the expiration of the bid validity period, the Employer may request Bidders to extend the period of validity of their Bids. The request and the responses shall be made in writing. If a bid security is requested in accordance with ITB 19, it shall also be extended 30 days beyond the deadline of the extended validity period. A Bidder may refuse the request without forfeiting its bid security. A Bidder granting the request shall not be required or permitted to modify its Bid and to include any additional conditions against the provisions specified in Bid Documents.
19. Bid Security	19.1 The Bidder shall furnish as part of its bid, in original form, a bid security as **specified in the BDS**. In case of e-submission of bid, the Bidder shall upload scanned copy of Bid security letter at the time of electronic submission of the bid. The Bidder accepts that the scanned copy of the Bid security shall, for all purposes, be equal to the original. The details of original Bid Security and the scanned copy submitted with e-bid should be the same otherwise the bid shall be non-responsive.
	19.2 The bid security shall be, at the Bidder's option, in any of the following forms: (a) an unconditional bank guarantee from Commercial Bank or Financial Institution eligible to issue Bank Guarantee as per prevailing Law or; (b) a cash deposit voucher in the Employer's Account as **specified in BDS**. In the case of a bank guarantee, the bid security shall be submitted either using the Bid Security Form included in Section IV (Bidding Forms) or in another Form acceptable to the employer. The form must include the complete name of the Bidder. The bid security shall be valid for minimum thirty (30) days beyond the original validity period of the bid, or beyond any period of extension if requested under ITB 18.2. A bid security valid for a shorter period shall be rejected by the Employer as nonresponsive.
	19.3 The bid security issued by any foreign Bank outside Nepal must be counter guaranteed by Commercial Bank or Financial Institution eligible to issue Bank Guarantee as per prevailing Law in Nepal.

Government of Nepal
Ministry of Urban Development
Department of Water Supply and Sewerage Management
Project Management Office
Butwal Rupandehi
Office Chief

	19.4 Any bid not accompanied by an enforceable and substantially compliant bid security shall be rejected by the Employer as nonresponsive. In case of e- Submission, if the scanned copy of an acceptable Bid Security letter is not uploaded with the electronic Bid then Bid shall be rejected.
	19.5 The public entity shall return the bid securities except those that are to be forfeited as per ITB 19.6 to the respective bidders within three (3) days after the successful bidder has furnished the required performance security and signed the Contract Agreement pursuant, to ITB 40.1 and ITB 41.1.
	19.6 The bid security shall be forfeited if: **GoN funded:** (a) a Bidder requests for withdrawal or modification of its bid, except as provided in ITB 18.2: (i) during the period of bid validity specified by the Bidder on the Letter of Technical Bid and Price Bid, in case of electronic submission; (ii) from the period twenty-four hours prior to bid submission deadline up to the period of bid validity specified by the Bidder on the Letter of Technical Bid and Price Bid, in case of hard copy submission. (b)a Bidder changes the prices or substance of the bid while providing information pursuant to clause 27.1; (c) a Bidder involves in fraud and corruption pursuant to clause 3.1; (d) the successful Bidder fails to: (i) furnish a performance security in accordance with ITB 35.5, ITB 35.8 and ITB 40.1; or (ii) sign the Contract in accordance with ITB 41.1; or (iii) accept the correction of arithmetical errors pursuant to clause 33.1; (e) if the bidder fails to inform about the saturation of the maximum number of contracts as per ITB 4.10. **DP funded:** The bid security shall be forfeited (a) if a Bidder withdraws its bid during the period of bid validity specified by the Bidder on the Letters of Technical Bid and Price Bid, except as provided in ITB 18.2; or (b) if the successful Bidder fails to (i) furnish a performance security in accordance with ITB 35.5 and ITB 40.1; or (ii) sign the Contract in accordance with ITB 41.1; or (iii) accept arithmetical corrections in accordance with ITB 33.1.
	19.7 The Bid Security of a Joint Venture shall be in the name of the Joint Venture that submits the bid. If the Joint Venture has not been legally constituted at the time of bidding, the Bid Security shall be in the names of all future partners as named in the letter of intent mentioned in ITB 4.1.
20. Format and Signing of Bid	20.1 The Bidder shall prepare one original set of the Technical Bid and one original of the Price Bid comprising the Bid as described in ITB 11 and clearly mark it **"ORIGINAL – TECHNICAL BID"** and **"ORIGINAL – PRICE BID."** Alternative bids, if permitted in accordance with ITB 13, shall be clearly marked **"ALTERNATIVE".** In

Office Chief

	addition, the Bidder shall submit copies of the bid in the number specified in the BDS, and clearly mark each of them **"COPY."** In the event of any discrepancy between the original and the copies, the original shall prevail. In case of e-submission of bid, the Bidder shall submit his bid electronically in PDF or web forms files as specified in ITB Clause 21.1(b).
	20.2 The original and all copies of the bid shall be typed or written in indelible ink and shall be signed by a person duly authorized to sign on behalf of the Bidder. This authorization shall consist of a written confirmation as **specified in the BDS** and shall be attached to the bid. The name and position held by each person signing the authorization must be typed or printed below the signature. All pages of the bid, except for un amended printed literature, shall be signed or initialed by the person signing the bid.
	20.3 Any amendments such as interlineations, erasures, or overwriting shall be valid only if they are signed or initialed by the person signing the bid.
	D. Submission and Opening of Bids
21. Sealing and Marking of Bids	21.1 Unless otherwise **specified in BDS**, Bidders shall submit their bids by electronic or by mail/by hand/by courier. Procedures for submission, sealing and marking are as follows: (a) Bidders submitting bids by mail, by hand or by courier shall enclose the original of the Technical Bid, and the original of the Price Bid and each copy of the Technical Bid and Price Bid, including alternative bids, if permitted in accordance with ITB 13, in separate sealed envelopes, duly marking the envelopes as **"ORIGINAL TECHNICAL BID", "ORIGINAL – PRICE BID", "ALTERNATIVE" and "COPY No. – TECHNICAL BID" and "COPY NO. PRICE BID"** These envelopes containing the original and the copies shall then be enclosed in one single envelope. (b) Bidders submitting Bids electronically shall follow the electronic bid submission procedure specified in this clause. i. The bidder is required to register in the e-GP system https://www.bolpatra.gov.np/egp following the procedure specified in e-GP guideline. ii. Interested bidders may either purchase the bidding document from the Employer's office as specified in the Invitation for Bid (IFB) or bidders may download the IFB and bidding document from e-GP system. iii. The registered bidders need to maintain their profile data required during preparation of bids. iv. The bidder can prepare their technical and price bids using data and documents maintained in bidder's profile and forms/format provided in bidding document by Employer. The bidder may submit bids as a single entity or as a joint venture. The bidder submitting bid in joint venture shall have to upload joint venture agreement along with partner(s) Bolpatra ID provided during bidder's registration. v. Bidders (all partners in case of JV) should update their profile data and documents required during preparation and submission of their technical bids. vi. In case of bid submission in JV, the consent of the partners shall be obtained through the confirmation link sent to the registered email address and the partners shall have to acknowledge their confirmation.

The required forms and documents shall be part of technical bids.

No.	Document	Requirement	Remarks
1.	Letter of Technical Bid	Mandatory	PDF
2.	Bid Security / Bank Guarantee	Mandatory	PDF
3.	Firm or Company registration Certificate	Mandatory	PDF
4.	VAT and PAN registration Certificate	Mandatory (for domestic bidders only)	PDF
5.	Business Registration Licence	Mandatory	PDF
6.	Tax Clearance Certificate/Tax return submission evidence/evidence of time extension	Mandatory (for domestic bidders only)	PDF
7.	Power of Attorney of Bid signatory	Mandatory	PDF
8.	Joint venture agreement	Mandatory in case of JV Bids Only	PDF
9.	Qualification Documents	Mandatory	Using profile data(financial details, contract details etc.) and Technical Proposal
10.	Additional documents] specified in ITB 11.2 (i)	Mandatory (If any)	PDF

The required forms and documents shall be part of price bids.

No.	Document	Requirement	Remarks
1.	Letter of Price Bid	Mandatory	PDF
2.	Completed Bill of Quantities (BoQ)	Mandatory	Online Forms
3.	Price Adjustment Table	Mandatory (If applicable)	Online Forms
4.	Additional Documents specified in ITB 11.3 (e)	Mandatory (If any)	PDF

Note:

a) *The documents specified as "Mandatory" should be included in e-submission and non-submission of the documents shall be considered as non-responsive bid.*

b) *Bidders (all partners in case of JV) should verify/update their profile documents as appropriate for the specific bid before submitting their bid electronically.*

vii. After providing all the details and documents, two separate bid response documents i.e technical bids and price bids will be generated from the system. Bidders are advised to download and verify the response documents prior to bid submission.

viii. For verifying the authentic user, the system will send one time password (OTP) in the registered e-mail address of the bidder. System will validate the OTP and allow bidder to submit their bid.

ix. Electronically submitted bids can be modified and/or withdrawn through

	system. The bidder may modify their bids multiple times online within bid submission date and time specified in e-GP system. Once a Bid is withdrawn, bidder won't be able to submit another bid response for the same bid. x. The Bidder / Bid shall meet the following requirements and conditions for e-submission of bids; aa) The e-submitted bids must be readable through PDF reader. bb) The facility for submission of bid electronically through e-submission is to promote transparency, non-discrimination, equality of access, and open competition in the bidding process. The Bidders are fully responsible to use the e- submission facility properly in e-GP system as per specified procedures and in no case the Employer shall be held liable for Bidder's inability to use this facility. cc) When a bidder submits electronic bid through the PPMO e-GP portal, it is assumed that the bidder has prepared the bid by studying and examining the complete set of the Bidding documents including specifications, drawings and conditions of contract. 21.2. The inner and outer envelopes shall: (aa) bear the name and address of the Bidder; (bb) be addressed to the Employer as provided in BDS 22.1; (cc) bear the specific identification of this bidding process indicated in BDS 1.1; and 21.3 The outer envelope and the inner envelope containing Technical Proposal shall bear a warning not to open before the time and date for the opening of Technical Bid in accordance with ITB 25.1. 21.4 The inner envelope containing the Price Bid shall bear a warning not to open until advised by the Employer in accordance with ITB 25.7 21.5 If all envelopes are not sealed and marked as required, the Employer will assume no responsibility for the misplacement or premature opening of the bid.
22. Deadline for Submission of Bids	22.1 Bids must be received by the Employer at the address and no later than the date and time indicated **in the BDS**. In case of e-submission, the standard time for e-submission is Nepal Standard Time as set out in the server. The e-procurement system will accept the e-submission of bid from the date of publishing of notice and will automatically not allow the e-submission of bid after the deadline for submission of bid.
	22.2 The Employer may, at its discretion, extend the deadline for the submission of bids by amending the Bidding Document in accordance with ITB 8, in which case all rights and obligations of the Employer and Bidders previously subject to the deadline shall thereafter be subject to the deadline as extended.
23. Late Bids	23.1 The Employer shall not consider any bid that arrives after the deadline for submission of bids, in accordance with ITB 22. Any bid received by the Employer after the deadline for submission of bids shall be declared late, rejected, and returned unopened to the Bidder.
24. Withdrawal, and Modification	24.1 A Bidder may withdraw, or modify its bid- Technical or Price - after it has been submitted either in hard copy or by e-submission. Once a Bid is withdrawn, bidder shall not be able to submit another bid for this bidding process. Procedures for withdrawal or modification of submitted bids are as follows:

Office Chief

of Bids	(i) **Bids submitted in Hard Copy** **GoN Funded:** a) Bidders may withdraw or modify its bids by sending a written notice in a sealed envelope, duly signed by an authorized representative, and shall include a copy of the authorization in accordance with ITB 20.2. The corresponding modification of the bid must accompany the respective written notice. All notices must be: (aa) prepared and submitted in accordance with ITB 20 and ITB 21, and in addition, the respective envelopes shall be clearly marked **"WITHDRAWAL", "MODIFICATION;"** and (bb) received by the Employer twenty; four hours prior to the deadline prescribed for submission of bids, in accordance with ITB 22. **DP Funded:** A Bidder may withdraw or modify its Bid – Technical or Price – after it has been submitted by sending a written notice, duly signed by an authorized representative, and shall include a copy of the authorization in accordance with ITB 20.2, (except that withdrawal notices do not require copies). The corresponding modification of the Bid must accompany the respective written notice. All notices must be (a) prepared and submitted in accordance with ITB 20 and ITB 21 (except that withdrawal notices do not require copies), and in addition, the respective envelopes shall be clearly marked "WITHDRAWAL," and "MODIFICATION;" and (b) received by the Employer prior to the deadline prescribed for submission of Bids, in accordance with ITB 22. ii) **E-submitted bids**. a) Bidder may submit modification or withdrawal prior to the deadline prescribed for submission of bids through e-GP system by using the forms and instructions provided by the system.
	24.2 Bids requested to be withdrawn in accordance with ITB 24.1 shall not be opened. In case of hard copy submission, the Bid will be returned unopened to the Bidders.
	24.3 The following provisions apply for withdrawal or modification of the Bids: **GoN Funded:** (i) In case of bids submitted in hard copy no bid shall be withdrawn or modified in the interval between 24 hours prior to the deadline for submission of bids and the expiration of the period of bid validity specified by the Bidder on the Letter of Bid or any extension thereof. (ii) In case of e-submitted bids no bids shall be withdrawn or modified in the interval between deadline for submission of bids and the expiration of the period of bid validity specified by the Bidder on the Letter of Technical Bid and Price Bid or any extension thereof. **DP Funded:** No Bid may be withdrawn or modified in the interval between the deadline for submission of Bids and the expiration of the period of bid validity specified by the Bidder on the Letters of Technical Bid and Price Bid or any extension thereof.
	24.4 Except in case of any modification or correction in bid document made by procuring entity, Bidder may submit request for withdrawal or modification only one time.

	24.5 In case of hard copy bid, no bid may be withdrawn if the bid has already been modified; except in case of any modification or correction in bid document by procuring entity.
	24.6 Request for withdrawal or modification must be made through the same medium of submission. Request for withdrawal or modifications through different medium shall not be considered.
25. Bid Opening	25.1 The Employer shall open the Technical Bids in public at the address, on the date and time **specified in the BDS** in the presence of Bidders' designated representatives who choose to attend. The Price Bids will remain unopened and will be held in custody of the Employer until the specified time of their opening. If the Technical Bid and Price Bid are submitted together in one envelope, the Employer shall reject the Bid as nonresponsive.
	25.2 The Employer shall download the e-submitted Technical Bid. The e-GP system allows the Employer to download the e-submitted technical bid only after bid opening date and time after login simultaneously by at least two members of the Bid Opening Committee.
	25.3 Electronically submitted Technical Bid shall be opened at first in the same time and date as specified above. Electronic Bids shall be opened one by one and read out. The e-submitted technical bids must be readable through open standards interfaces. Unreadable and or partially submitted bid files shall be considered incomplete.
	25.4 Thereafter, envelopes marked "WITHDRAWAL" shall be opened and read out and the envelope with the corresponding Bid shall not be opened, but returned to the Bidder. No bid withdrawal shall be Permitted unless the corresponding withdrawal notice contains a valid authorization to request the withdrawal and is read out at bid opening. Next, envelopes marked "MODIFICATION" shall be opened and read out with the corresponding bid. No Technical Bid and/or Price Bid modification shall be permitted unless the corresponding modification notice contains a valid authorization to request the modification and is read out and recorded at bid opening. Only the Technical Bid, both Original as well as Modification, are to be opened, read out, and recorded at the opening. Price Bids, both Original and Modification, will remain unopened in accordance with ITB 25.1.
	25.5 All other envelopes holding the Technical Bid shall be opened one at a time, reading out: the name of the Bidder; whether there is a modification; the presence of a bid security and any other details as the Employer may consider appropriate. Only Technical Bids read out and recorded at bid opening shall be considered for evaluation. No bid shall be rejected at opening of Technical Bids except for late bids, in accordance with ITB 23.1.
	25.6 The Employer shall prepare a record of the opening of Technical Bids that shall include, as a minimum: the name of the Bidder and whether there is a withdrawal, or modification; and the presence or absence of a bid security. The Bidders' representatives who are present shall be requested to sign the record. The omission of a Bidder's signature on the record shall not invalidate the contents and effect of the record.
	25.7 At the end of the evaluation of the Technical Bids, the Employer will invite bidders who have submitted substantially responsive Technical Bids and who have been determined as being qualified for award to attend the opening of the Price Bids. The

	date, time, and location of the opening of Price Bids will be advised in writing by the Employer. Bidders shall be given at least 7 days' notice for the opening of Price Bids.
	25.8 The Employer will notify Bidders in writing who have been rejected on the grounds of their Technical Bids being substantially nonresponsive to the requirements of the Bidding Document and return their Price Bids unopened.
	25.9 The Employer shall conduct the opening of Price Bids of all Bidders who submitted substantially responsive Technical Bids, in the presence of Bidders' representatives who choose to attend at the address, on the date, and time specified by the Employer. The Bidder's representatives who are present shall be requested to sign a register evidencing their attendance.
	25.10 All envelopes containing Price Bids shall be opened one at a time and the following read out and recorded: (a) the name of the Bidder; (b) whether there is a modification; (c) the Bid Prices, including any discounts and alternative offers; and (d) any other details as the Employer may consider appropriate. Only Price Bids, discounts, modifications, and alternative offers read out and recorded during the opening of Price Bids shall be considered for evaluation. No Bid shall be rejected at the opening of Price Bids.
	25.11 The Employer shall prepare a record of the opening of Price Bids that shall include, as a minimum, the name of the Bidder, the Bid Price (per lot if applicable), any discounts, modifications and alternative offers. The Bidders' representatives who are present shall be requested to sign the record. The omission of a Bidder's signature on the record shall not invalidate the contents and effect of the record.
E. Evaluation and Comparison of Bids	
26. Confidentiality	26.1 Information relating to the examination, evaluation, comparison, and post-qualification of bids and recommendation of Contract award, shall not be disclosed to Bidders or any other persons not officially concerned with such process until information on Contract award is communicated to all Bidders.
	26.2 Any attempt by a Bidder to influence the Employer in the evaluation of the bids or Contract award decisions may result in the rejection of its bid.
	26.3 Notwithstanding ITB 26.2, from the time of bid opening to the time of Contract award, if any Bidder wishes to contact the Employer on any matter related to the bidding process, it may do so in writing.
27. Clarification of Bids	27.1 To assist in the examination, evaluation, and comparison of the Technical and Price Bids, the Employer may, at its discretion, ask any Bidder for a clarification of its Bid. Any clarification submitted by a Bidder that is not in response to a request by the Employer shall not be considered. The Employer's request for clarification and the response shall be in writing. No change in the substance of the Technical Bid or prices in the Price Bid shall be sought, offered, or permitted, except to confirm the correction of arithmetic errors discovered by the Employer in the evaluation of the Price Bids, in

	accordance with ITB 33. In case of e-submission of bid, upon notification from the employer, the bidder shall also submit the original of documents comprising the Technical and Price Bid as per ITB 11.2 and ITB 11.3 for verification of submitted documents for acceptance of the e-submitted bid.
	27.2 If a Bidder does not provide clarifications of its Bid by the date and time set in the Employer's request for clarification, its Bid shall be rejected.
28. Deviations, Reservations, and Omissions	28.1 During the evaluation of bids, the following definitions apply: (a) "Deviation" is a departure from the requirements specified in the Bidding Document; (b) "Reservation" is the setting of limiting conditions or withholding from complete acceptance of the requirements specified in the Bidding Document; and (c) "Omission" is the failure to submit part or all of the information or documentation required in the Bidding Document.
29. Examination of Technical Bid	29.1 The Employer shall examine the Technical Bid to confirm that all documents and technical documentation requested in ITB 11.2 have been submitted. If any of these documents or information (except alternative Technical Bid which is optional) is missing, the bid shall be rejected.
	29.2 In case of e-submission bids, the Employer shall confirm that all the documents and information requested in ITB 21.1 have been submitted. If any of these documents or information is missing, the bid shall be rejected.
30. Determination of Responsiveness of Technical Bid	30.1 The Employer's determination of a Bid's responsiveness is to be based on the contents of the bid itself, as defined in ITB 11.2.
	30.2 A substantially responsive Technical Bid is one that meets the requirements of the Bidding Document without material deviation, reservation, or omission. A material deviation, reservation, or omission is one that, (a) if accepted, would: (i) affect in any substantial way the scope, quality, or performance of the Works specified in the Contract; or (ii) limit in any substantial way, inconsistent with the Bidding Document, the Employer's rights or the Bidder's obligations under the proposed Contract; or (b) if rectified, would unfairly affect the competitive position of other Bidders presenting substantially responsive bids.
	30.3 The Employer shall examine the technical aspects of the Bid submitted in accordance with ITB 16, Technical Proposal, in particular, to confirm that all requirements of Section VI (Works Requirements) have been met without any material deviation, reservation or omission.
	30.4 If a bid is not substantially responsive to the requirements of the Bidding Document, it shall be rejected by the Employer and may not subsequently be made responsive by correction of the material deviation, reservation, or omission.
	30.5 In case of e-submission bids, the Employer evaluates the bid on the basis of the information in the electronically submitted bid files. If the Bidder cannot substantiate or

Office Chief

	provide evidence to establish the information provided in e-submitted bid through documents/ clarifications as per ITB Clause 27.1, the bid shall not be considered for further evaluation.
	30.6 Except in case of e-submission, the Price Bid of the bidder, which is evaluated as substantially non-responsive in technical bid, shall be returned to the respective bidders.
31. Non-conformities Errors, and Omissions	31.1 Provided that a bid is substantially responsive, the Employer may waive any non-conformities in the bid that do not constitute a material deviation, reservation, or omission.
	31.2 Provided that a Technical Bid is substantially responsive, the Employer may request that the Bidder submit the necessary information or documentation, within a reasonable period of time, to rectify nonmaterial nonconformities in the Technical Bid related to documentation requirements. Requesting information or documentation on such nonconformities shall not be related to any aspect of the Price Bid. Failure of the Bidder to comply with the request may result in the rejection of its bid.
	31.3 Provided that a Technical Bid is substantially responsive, the Employer shall rectify quantifiable nonmaterial nonconformities related to the Bid Price. To this effect, the Bid Price shall be adjusted, for comparison purposes only, to reflect the price of a missing or non-conforming item or component. The adjustment shall be made using the methods indicated in Section III (Evaluation and Qualification Criteria).
	31.4 If the monetary value of such non-conformities is found to be more than fifteen percent of the Bid Price of the bidder pursuant to ITB **31.3**, such bid shall be considered nonresponsive and shall not be involved in evaluation.
32 Eligibility and Qualification of the Bidder	32.1 The Employer shall determine to its satisfaction during the evaluation of Technical Bids whether Bidders meet the eligibility and qualifying criteria specified in Section III (Evaluation and Qualification Criteria).
	32.2 The determination shall be based upon an examination of the documentary evidence of the Bidder's qualifications submitted by the Bidder, pursuant to ITB 17.1. If two or more companies or firms have been merged prior to the submission of the bid, the qualifications of the companies or firms existing prior to such merger shall be deemed to form part of the qualifications of the resulting merged firm or company.
	32.3 An affirmative determination shall be a prerequisite for the opening and evaluation of a Bidder's Price Bid. A negative determination shall result into the disqualification of the Bid, in which event the Employer shall return the unopened Price Bid to the Bidder.
33. Correction of Arithmetical Errors	33.1 During the evaluation of Price Bids, the Employer shall correct arithmetical errors on the following basis: (a) only for unit price Contracts, if there is a discrepancy between the unit price and the total price that is obtained by multiplying the unit price and quantity, the unit price shall prevail and the total price shall be corrected, unless in the opinion of the Employer there is an obvious misplacement of the decimal point in the unit price, in which case the total price as quoted shall govern and the unit price shall be corrected; (b) if there is an error in a total corresponding to the addition or subtraction of subtotals, the subtotals shall prevail and the total shall be corrected;

	(c) If there is a discrepancy between the bid price in the Summary of Bill of Quantities and the bid amount in item (c) of the Letter of Price Bid, the bid price in the Summary of Bill of Quantities will prevail and the bid amount in item (c) of the Letter of Price Bid will be corrected. (d) If there is a discrepancy between words and figures, the amount in words shall prevail, unless the amount expressed in words is related to an arithmetic error, in which case the amount in figures shall prevail subject to (a), (b) and (c) above.
	33.2 If a Bidder does not accept the correction of arithmetical errors, its bid shall be disqualified and its bid security shall be forfeited.
34 Subcontractors	34.1 In case of Prequalification, the Bidder's Bid shall name the same subcontractor as submitted in the prequalification application and approved by the Employer. In case of Post-qualification, the Employer may permit subcontracting for certain specialized works as indicated in Section III When subcontracting is permitted by the Employer, the sub-contractor shall meet the qualifications criteria as indicated in section III. Sub-contractors' qualification and experience will not be considered for evaluation of the Bidder. The Bidder on its own (without taking into account the qualification and experience of the sub-contractor) should meet the qualification criteria. Bidders may propose subcontracting up to the percentage of total value of contracts or the volume of works as **specified in the BDS.**
35. Evaluation of Price Bids	35.1 The Employer shall use the criteria and methodologies listed in this Clause. No other evaluation criteria or methodologies shall be permitted.
	35.2 To evaluate a Price Bid, the Employer shall consider the following: (a) the bid price, excluding Value Added Tax, and Provisional Sums, in the Summary Bill of Quantities, for Unit Rate Contracts, or Schedule of Prices for lump sum Contracts, but including Day work items, where priced competitively; (b) adjustment for correction of arithmetic errors in accordance with ITB 33.1; (c) adjustment due to discounts offered in accordance with ITB 14.4; (d) adjustment for nonconformities in accordance with ITB 31.3; (e) application of all the evaluation factors indicated in Section III (Evaluation and Qualification Criteria) If the evaluated Bid Price of the Bidder is more than 30 (thirty) percent below or substantially higher than the cost estimate, the Employer shall reject the Bid as non-responsive.
	35.3 The estimated effect of the price adjustment provisions of the Conditions of Contract, applied over the period of execution of the Contract, shall not be taken into account in bid evaluation.
	35.4 If this Bidding Document allows Bidders to quote separate prices for different lots (Contracts), and to award multiple Contracts to a single Bidder **as specified in BDS**, the methodology to determine the lowest evaluated price of the Contract combinations, including any discounts offered in the Letter of Price Bid, is specified in Section III (Evaluation and Qualification Criteria).

Office Chief

	35.5 If the bid for a Unit Rate Contract, evaluated as per ITB 36.1, is front-loaded or has quoted abnormally high rate for any item believing that the item was underestimated, the Employer **shall** require the Bidder to provide clarification along with detailed rate analysis, for any or all items of the Bill of Quantities as per ITB 27.1. The rate analysis submitted shall be analyzed and compared against prevailing norms and rates, on the basis of the work execution methodology, technology, and management methods specified by the bidder. If the clarification is deemed unsatisfactory, the Employer shall require that the amount of the performance security be increased at the expense of the Bidder as **specified in BDS**.
	35.6 In case of e-submission bids, the Employer evaluates the bid on the basis of the information in the electronically submitted bid files. If the Bidder cannot substantiate or provide evidence to establish the information provided in e-submitted bid through documents/ clarifications as per ITB Clause 27.1, the bid shall not be considered for further evaluation.
	35.7 If all the Bids evaluated are substantially higher than the cost estimate, the employer may negotiate with the bidder who submitted the lowest evaluated substantially responsive Bid to propose a lump sum discount rate in order to bring the bid price within the approved cost estimate. However, no change in the substance of the bid is permitted during the negotiations.
	35.8 If no agreement can be reached as per ITB 35.7, the employer shall cancel the procurement proceedings.
36. Comparison of Bids	36.1 The Employer shall evaluate all the bid prices of the substantially responsive bids in accordance with ITB 35.2. The Employer shall determine the Average Bid Price of all the substantially responsive Bids. The Bid Price which is closest to the Average Bid Price <u>AND is not substantially higher than the cost estimate</u> shall be selected for awarding the contract. In case two or more Bid Prices are determined to be equally closest to the Average Bid Price, the Bid Price which is below the Average Bid Price shall be selected for awarding the contract.
	36.2 While evaluating the Bid Price as per ITB 36.1, if the Bid Price of two or more Bidders is found to be equal, the Employer shall select the bid for awarding the contract by drawing of lots in presence of Bidders' designated representatives who choose to attend in date, time and place as notified by the Employer in writing to the concerned bidders. The Bidders' representatives who are present shall be requested to sign a record evidencing their attendance. The omission of a Bidder's signature on the record or the absence of a Bidder during the drawing of lots shall not invalidate the contents and the effect of the record. The method of drawing of lots shall be determined by the Employer.

37. Employer's Right to Accept Any Bid, and to Reject Any or All Bids	37.1 The Employer reserves the right to accept or reject any bid, and to annul the bidding process and reject all Bids at any time prior to contract award, without thereby incurring any liability to Bidders. In case of annulment, all Bids submitted and specifically, bid securities, shall be promptly returned to the Bidders.
	37.2 The public entity shall give notice of the rejection of bids or the cancellation of the procurement proceedings pursuant to ITB 37.1, along with the reasons for such rejection or cancellation, to all bidders.
	37.3 Where any bidder requests, within thirty (30) days of the communication of the notice pursuant to ITB 37.2, the grounds for the rejection of all bids or the cancellation of the procurement proceedings, the public entity shall provide such information to that bidder.
F. Award of Contract	
38. Award Criteria	38.1 The Employer shall award the Contract to the Bidder whose Bid Price is selected as per ITB 35.7, ITB 36.1 or ITB 36.2 and is substantially responsive to the Bidding Document, provided further that the Bidder is determined to be qualified to perform the Contract satisfactorily.
39. Letter of Intent to Award the Contract/Notification of Award	39.1 The Employer shall notify the concerned Bidder whose bid has been selected in accordance with ITB 38.1 within seven days of the selection of the bid, in writing that the Employer has intention to accept its bid and the information regarding the name, address and amount of selected bidder shall be given to all other bidders who submitted the bid.
	39.2 After issuance of the notice under ITB 39.1 if the concerned bidder provides information pursuant to ITB 4.10 regarding saturation of maximum number of contracts, the employer shall disqualify the bidder and shall select the next Bidder whose Bid Price is closest to the previously determined Average Bid Price in accordance with ITB 38.1 and notify accordingly as per ITB 39.1.
	39.3 If no bidder submits an application pursuant to ITB 42 within a period of seven days of the notice provided under ITB 39.1, the Employer shall, accept the bid selected in accordance with ITB 38.1 and Letter of Acceptance shall be communicated to the selected bidder prior to the expiration of period of Bid validity, to furnish the performance security and sign the contract within fifteen days.
	39.4 After communicating letter of acceptance under ITB 39.3, if the concerned bidder provides information pursuant to ITB 4.10 regarding saturation of maximum number of contracts, the employer shall reject the bid of that bidder and shall select the next Bidder whose Bid Price is closest to the previously determined Average Bid Price in accordance with ITB 38.1 and shall issue the notice accordingly as per ITB 39.1. In such case bid security of the rejected bidder shall not be forfeited.
40. Performance Security	40.1 Within Fifteen (15) days of the receipt of Letter of Acceptance from the Employer, the successful Bidder shall furnish the performance security in an amount equal to 5 (five) percent of the Bid Price in accordance with the Conditions of Contract and subject to ITB 35.5, from Commercial Bank or Financial Institution eligible to issue Bank Guarantee as per prevailing Law in Nepal using Sample Form for the Performance Security included in Section X (Contract Forms), or another form acceptable to the Employer. The performance security issued by any foreign Bank outside Nepal must be counter guaranteed by Commercial Bank or Financial Institution eligible to issue Bank

Office Chief

	Guarantee as per prevailing Law in Nepal. The Bid Price shall be without VAT but including Provisional Sum.
	40.2 Failure of the successful Bidder to submit the above-mentioned Performance Security or to sign the Contract Agreement shall constitute sufficient grounds for the annulment of the award and forfeiture of the bid security. In that event the Employer may award the Contract to the next Bidder whose Bid Price is closest to the previously determined Average Bid Price in accordance with ITB 38.1 whose offer is substantially responsive and is determined by the Employer to be qualified to perform the Contract satisfactorily. The process shall be repeated according to ITB 39.
41 Signing of Contract	41.1 The Employer and the successful Bidder shall sign the Contract Agreement within the period as stated ITB 40.1.
	41.2 At the same time, the Employer shall affix a public notice on the result of the award on its notice board and make arrangement for causing such notice to be affixed on the notice board also of the ***District Coordination Committee, District Administration Office, Provincial Treasury and Controller Office and District Treasury and Controller Office.*** The Employer may make arrangements to post the notice into its website, if it has; and if it does not have, into the website of the Public Procurement Monitoring Office, identifying the bid and lot numbers and the following information: (i) the result of evaluation of bid; (ii) date of publication of notice inviting bids; (iii) name of newspaper; (iv) reference number of notice; (v) item of procurement; (vi) name and address of bidder making contract and (viii) contract price
	41.3 Within thirty (30) days from the date of issuance of notification pursuant to ITB 39.1 unsuccessful bidders may request in writing to the Employer for a debriefing seeking explanations on the grounds on which their bids were not selected. The Employer shall promptly respond in writing to any unsuccessful Bidder who, requests for debriefing.
	41.4 If the bidder whose bid has been accepted fails to sign the contract as stated ITB 40.1, the Public Procurement Monitoring Office shall blacklist the bidder on recommendation of the Public Entity.
42. Complaint and Review	42.1 If a Bidder is dissatisfied with the Procurement proceedings or the decision made by the Employer in opening of the price bid or the intention to award the Contract, it may file an application to the Chief of the Public Entity within Seven (7) days of providing the notice under ITB 25.8 and ITB 39.1 by the Public Entity, for review of the proceedings stating the factual and legal grounds.
	42.2 Late application filed after the deadline pursuant to ITB 42.1 shall not be processed.
	42.3 The chief of Public Entity shall, within five (5) days after receiving the application, give its decision with reasons, in writing pursuant to ITB 42.1: (a) whether to suspend the procurement proceeding and indicate the procedure to be adopted for further proceedings; or (b) to reject the application. The decision of the chief of Public Entity shall be final for the Bid amount up to the value as stated in 42.4.
	42.4 If the Bidder is not satisfied with the decision of the Public Entity in accordance with ITB 42.3, or the decision is not given within five (5) days of receipt of application pursuant to ITB 42.1, it can, within seven (7) days of receipt of such decision, file an

	application to the Public Procurement Review Committee of the GoN, stating the reason of its disagreement on the decision of the chief of Public Entity and furnishing the relevant documents, provided that its Bid amount ,equal or more than Rupees Twenty Million (NRs. 20,000,000). The application may be sent by hand, by post, by courier, or by electronic media at the risk of the Bidder itself.
	42.5 Late application filed after the deadline pursuant to ITB 42.4 shall not be processed.
	42.6 Within three (3) days of the receipt of application from the Bidder, pursuant to ITB 42.4, the Public Procurement Review Committee shall notify the concerning Public Entity to furnish its procurement proceedings, pursuant to ITB 42.3.
	42.7 Within three (3) days of receipt of the notification pursuant to ITB 42.6, the Public Entity shall furnish the copy of the related documents to the Public Procurement Review Committee.
	42.8 The Public Procurement Review Committee, after inquiring from the Bidder and the Public Entity, if needed, shall give its decision within thirty (30) days of the receipt of the application filed by the Bidder, pursuant to ITB 42.4.
	42.9 The Bidder, filing application pursuant to ITB 42.4, shall have to furnish a cash amount or Bank guarantee from Commercial Bank or Financial Institution eligible to issue Bank Guarantee as per prevailing Law equivalent to ten percent (10 %) of amount of bid security in case of complaint against decision pursuant to ITB 25.8 and one percent (1%) of its quoted Bid amount in case of complaint against decision pursuant to ITB 39.1 with the validity period of at least ninety (90) days from the date of the filing of application pursuant to ITB 42.4.
	42.10 If the claim made by the Bidder pursuant to ITB 42.4 is justified, the Public Procurement Review Committee shall have to return the security deposit to the applicant, pursuant to ITB 42.9, within seven (7) days of such decision made.
	42.11 If the application submitted by the Bidder pursuant to ITB 42.4 is dismissed by the Public Procurement Review Committee, the security deposit (Cash or Bank Guarantee) submitted by the Bidder pursuant to ITB 42.9 shall be forfeited.
	42.12 If the Employer does not implement the decision of the Public Procurement Review Committee, the bidder may file an application to the Public Procurement Review Committee.

Office Chief

Section II: Bid Data Sheet

This section consists of provisions that are specific to each procurement and supplement the information or requirements included in Section I. Instructions to Bidders.

A. General	
ITB 1.1	The number of the Invitation for Bids is: **02/083-84/NCB/Works/C/WSSMO-BUTWAL.**
ITB 1.1	The Employer is: ***Water Supply and Sewerage Management Office, Butwal.***
ITB 1.1	**Multiple Contract or lots (contracts) is *"not applicable"*.**
ITB 2.1	The name of the Project is ***Construction of Entire Works of Imiliya Water Supply Project, Buddhabhumi-09, Kapilvastu.*** The implementing agency is ***Water Supply and Sewerage Management Office, Butwal.*** GoN Funded or DP Funded: ***GoN Funded***
ITB 4.1 (a)	**For GoN Funded:** Maximum number of partners in a joint venture shall be: **3 (three)**
ITB 4.4	*For GoN:* ***www.ppmo.gov.np***
ITB 4.9 & ITB 4.10	**For GoN Funded:** The Bidder, including all parties constituting the Bidder, shall be ineligible to participate in the open competitive bidding process if it has already secured **five (5)** number of construction contracts (in open competitive bidding) and has not yet completed the work as stipulated in the respective contracts. Following Procurement of Works contracts shall not be counted for this purpose: a) The works for which tender were invited or contracts accepted before 2078-12-03 B.S (March 17, 2022 A.D). b) The works for which tender were invited and contracts accepted after 2078-12-03 B.S (March 17, 2022 A.D) but the work acceptance report has been approved according to Rule 117 of PPR. c) The works for which tenders were invited or contracts accepted under all types of foreign assistance.
B. Bidding Document	
ITB 7.1	For clarification purposes only, the Employer's address is: Attention: The Office Chief Address: Water Supply and Sewerage Management Office, Butwal Telephone: 071-420518 / 9857078518 Facsimile number: 071-420518 Electronic mail address: fwssmpbutwal@gmail.com.

Office Chief

ITB 7.4	A Pre-Bid meeting ***"shall"*** held. Pre-Bid Meeting will **Take place at the following date, time and place:** Date: 8th October, 2026 Time: 13:00 Hrs Place: Water Supply and Sewerage Management Office, Butwal A site visit ***"shall not be"*** organized by the Employer.
ITB 7.5	Time for request: Requests for clarification should be received by the Employer no later than **10 days** prior to the deadline for submission of bids.
C. Preparation of Bids	
ITB 10.1	The language of the bid is: **English / Nepali**
ITB 11.2 (i)	The Bidder shall submit with its Technical Bid the following additional documents: ***None.***
ITB 11.3 (b)	In accordance with ITB 12 and ITB 14, the following schedules shall be submitted with the bid, including the priced Bill of Quantities for Unit Rate Contracts and Schedule of Prices for lump sum contracts: ***None.***
ITB 11.3 (e)	The Bidder shall submit with its Price Bid the following additional documents: ***None.***
ITB 13.1	Alternative bids ***"shall not be"*** permitted.
ITB 13.2	Alternative times for completion ***"shall not be"*** permitted.
ITB 13.4	Alternative technical solutions shall be permitted for the following parts of the Works: ***Not Applicable.***
ITB 14.6	The prices quoted by the Bidder ***"shall be"*** subject to adjustment during the performance of the Contract. ***"Bidder shall submit the Table of Price Adjustment Data as a part of price bid."***
ITB 18.1	The bid validity period shall be: ***Ninety (90) days.***
ITB 19.1	The Bidder shall furnish a bid security, from Commercial Bank or Financial Institution eligible to issue Bank Guarantee as per prevailing Law in Nepal with a minimum of NRs ***3,900,000.00***, which shall be valid for 30 days beyond the validity period of the bid.
ITB 19.2 (b)	Office Name: Bank Name: Agricultural Development Bank Bank Address: Rupandehi Account Number: 0414301014253027 Office Code: 337054801
ITB 20.1	In addition to the original of the bid, the number of copy/ies is/are: ***"Not Applicable.***
ITB 20.2	The written confirmation of authorization to sign on behalf of the Bidder shall indicate: (a) The name and description of the documentation required to demonstrate the authority of the signatory to sign the Bid such as a Power of Attorney; and (b) In the case of Bids submitted by an existing or intended JV, an undertaking signed by

	all parties (i) stating that all parties shall be jointly and severally liable, and (ii) nominating a Representative who shall have the authority to conduct all business for and on behalf of any and all the parties of the JV during the bidding process and, in the event the JV is awarded the Contract, during contract execution.
D. Submission and Opening of Bids	
ITB 21.1	Bidders shall have the option of submitting their bids ***: by hand / by courier"***.
ITB 22.1	For bid submission purposes only, the Employer's address is: Attention: The Office Chief Address: Water Supply and Sewerage Management Office, Butwal. The deadline for bid submission is: Date: 28th October, 2026 Time: 12:00 Hrs
ITB 25.1	The Technical Bid opening shall take place at: Address: Water Supply and Sewerage Management Office, Butwal. Date: 28th October, 2026 Time: 13:00 Hrs
E. Evaluation and Comparison of Bids	
ITB 34.1	Contractor's proposed subcontracting: Maximum percentage of subcontracting permitted is: **25% of the total contract amount without VAT but including PS.**
ITB 35.4	Bidders are ***"not permitted"*** to quote separate prices for lots (Contracts), and a single Bidder will be awarded multiple lots (Contracts) based on provision of ***Paragraph 1.2, Multiple Contracts Section III (Evaluation and Qualification Criteria):***
ITB 35.5	The amount of the performance security be increased by **Eight (8)** percent of the quoted bid price without VAT but Including PS.

Office Chief

Section III: Evaluation and Qualification Criteria

This Section contains all the criteria that the Employer shall use to evaluate bids and qualify Bidders by post-qualification exercise. GoN requires bidders to be qualified by meeting predefined, precise minimum requirements. The method sets pass-fail criteria, which, if not met by the bidder, results in disqualification. In accordance with ITB 32 and ITB 35, no other methods, criteria and factors shall be used. The Bidder shall provide all the information requested in the forms included in Section IV (Bidding Forms).

1. Evaluation

In addition to the criteria listed in ITB 35.2 (a) - (e) the following criteria shall apply:

Note:

Use the evaluation criteria listed below as appropriate and required for the project.

1.1 Adequacy of Technical Proposal

Evaluation of the Bidder's Technical Proposal will include an assessment of the Bidder's technical capacity, to mobilize key equipment and personnel for the contract consistent with its proposal regarding work methods, scheduling, and material sourcing in sufficient detail and fully in accordance with the requirements stipulated in Section VI (Works Requirements).

Non-compliance with equipment and personnel requirements described in Section VI (Works Requirements) shall not be grounds for bid rejection and such non-compliance will be subject to clarification and rectification prior to contract award.

1.2 Multiple Contracts

Multiple Contracts, if permitted under ITB 35.4, will be evaluated as follows:

Award Criteria for Multiple Contracts [ITB 35.4]:

Bidders have the option to Bid for any one or more Contracts. Bids will be evaluated taking into account discounts offered, if any, for combined contracts. The contract(s) will be awarded to the Bidder or Bidders offering the lowest evaluated cost to the Employer for combined contracts, subject to the selected Bidder(s) meeting the required qualification criteria for combination of multiple contracts as the case may be.

Qualification Criteria for Multiple Contracts:

The criteria for qualification shall be the sum of the minimum requirements for respective individual contracts as specified under items 2.3.2, 2.3.3, 2.3.4 and 2.4.2 b.

With respect to the **Contracts of Similar Size and Nature** under item 2.4.2(a) of Section III, the evaluation shall be done as below:

N is the minimum number of contracts required as per Specific Construction Experience (2.4.2(a)).

V is the minimum value of a single contract as per Note (2)~~,~~ **or** (3) of 2.4.2 Specific Construction Experience.

i. Minimum requirements for combined contract(s) shall be the aggregate requirements for each contract for which the bidder has submitted bids as follows, and N1,N2,N3, etc. shall be different contracts:

Contract 1: N1 contracts, each of minimum value V1;

Contract 2: N2 contracts, each of minimum value V2;

Contract 3: N3 contracts, each of minimum value V3;

----etc.

Or

ii. Total number of contracts is equal or less than N1 + N2 + N3 +--but the total value of all such contracts is equal or more than N1 x V1 + N2 x V2 + N3 x V3 +---.

1.3 In Case, other than Multiple Contracts

Bidders have the option to Bid for any one or more Contracts. The contracts will be awarded to the Bidder or Bidders offering the **substantially responsive Bid closest to the Average Bid Price** to the Employer, subject to the selected Bidder(s) meeting the required qualification which shall be the sum of the minimum requirements for respective individual contracts. Under this case, the Contract shall be awarded based on Least Cost Combination to the Employer.

1.4 Completion Time

An alternative Completion Time, if permitted under ITB 13.2, will be evaluated as follows:

Not Applicable.

1.5 Alternative Technical Solutions

Alternative technical solutions, if permitted under ITB 13.4, will be evaluated as follows:

Not Applicable.

1.6 Quantifiable Nonconformities and Omissions

Subject to ITB 14.2 and ITB 35.2, the evaluated cost of quantifiable nonconformities including omissions, is determined as follows:

[*Insert in bidding document:* "Pursuant to ITB 31.3, the cost of all quantifiable nonmaterial nonconformities shall be evaluated, but excluding omission of prices in the BoQ.The Employer will make its own assessment of the cost of any nonmaterial nonconformities and omissions for the purpose of ensuring fair comparison of bids."]

2. Qualification

2.1 Eligibility

Criteria	Compliance Requirements				Documents
Requirement	Single Entity	Joint Venture			Submission Requirements
		All Partners Combined	Each Partner	One Partner	
2.1.1 Nationality					
Nationality in accordance with ITB sub-clause 4.2	must meet requirement	must meet requirement	must meet requirement	not applicable	Letter of Technical Bid, Forms ELI –1; ELI –2 with attachments
2.1.2 Conflict of Interest					
No conflicts of interest in accordance with ITB Sub-Clause 4.3.	must meet requirement	existing or intended JV must meet requirement	must meet requirement	not applicable	Letter of Technical Bid
2.1.3 Government/ DP Eligibility					
Not having been declared ineligible by government /DP, as described in ITB Sub-Clause 4.4.	must meet requirement	must meet requirement	must meet requirement	not applicable	Letter of Technical Bid
2.1.4 Government-owned Entity					
Bidder required to meet conditions of ITB Sub-Clause 4.5.	must meet requirement	existing or intended JV must meet requirement	must meet requirement	not applicable	Letter of Technical Bid, Forms ELI - 1, ELI - 2, with attachments

Office Chief

2.1.5 UN Eligibility					
Not having been declared ineligible based on a United Nations resolution or Employer's country law, as described in ITB Sub-Clause 4.7.	must meet requirement	existing or intended JV must meet requirement	must meet requirement	not applicable	Letter of Technical Bid
2.1.6 Bidder's Running Contracts					
Bidders have not yet secured five (5) number of construction Contracts[2] (in open competitive bidding) as described in ITB Sub-Clause 4.9.	must meet requirement	existing or intended JV must meet requirement	must meet requirement	not applicable	Letter of Technical Bid, Form ELI-3
2.1.7 Other Eligibility					
Firm or Company Registration Certificate	must meet requirement	not applicable	must meet requirement	not applicable	Document attachment
Business Registration License	must meet requirement	not applicable	must meet requirement	not applicable	Document attachment
VAT and PAN Registration certificate	must meet requirement	not applicable	must meet requirement	not applicable	Document attachment
Tax Clearance Certificate or Tax return submission evidence or evidence of time extension for the F/Y 082/83.	must meet requirement	not applicable	must meet requirement	not applicable	Document attachment

[2] Following Procurement of Works contracts shall not be counted for this purpose:

a) The works for which tender were invited or contracts accepted before 2078-12-03 B.S (March 17, 2022 A.D)

b) The works for which tender have been invited and contracts accepted after 2078-12-03 B.S (March 17, 2022 A.D) but the work acceptance report has been approved according to Rule 117 of PPR.

c) The works for which tenders were invited or contracts accepted under all types of foreign assistance.

Office Chief

Ministry of Energy, Water Resources and Irrigation, Government of Nepal
Department of Water Supply and Sewerage Management
Water Supply and Sewerage Management Office
Butwal, Rupandehi

2.2 Pending Litigation

Criteria	Compliance Requirements				Documents
Requirement	Single Entity	Joint Venture			Submission Requirements
		All Partners Combined	Each Partner	One Partner	
2.2.1 Pending Litigation					
All pending litigation shall be treated as resolved against the Bidder and so shall in total not represent more than ***50%*** percent of the Bidder's net worth.	must meet requirement by itself or as partner to past or existing JV	not applicable	must meet requirement by itself or as partner to past or existing JV	not applicable	Form LIT - 1

Note:

(1) The percentage should normally be within the range of 50% to 100% of the Bidder's net worth.

2.3 Financial Situation

2.3.1 Historical Financial Performance					
Submission of audited balance sheets and income statements, for the last ***Three (3)*** years to demonstrate the current soundness of the Bidder's financial position. As a minimum, a Bidder's net worth for the last year calculated as the difference between total assets and total liabilities should be positive.	must meet requirement	not applicable	must meet requirement	not applicable	Form FIN - 1 with attachments

Note:

(2)The financial information provided by a Bidder should be reviewed in its entirety to allow a truly informed judgment, and the pass-fail decision on the financial position of the Bidder should be given on this basis. Balance sheet of the past three to five year's period which shall be decided according to the nature of the work.

Office Chief
Ministry of Urban Development
Department of Water Supply and Sewerage Management
Butwal, Rupandehi

2.3.2 Average Annual Construction Turnover					
Minimum average annual construction turnover of NRs ***116,345,000.00 (One Hundred Sixteen Million Three Hundred Forty-five Thousand)*** calculated as total certified payments received for construction contracts in progress or completed, within best three years out of last ten fiscal years.	must meet requirement	must meet requirement	must meet ***25%*** of the requirement	must meet ***40%*** of the requirement	Form FIN -2

Only the net amount shall be calculated after deducting the amount for VAT and such amount shall be adjusted to present value by applying wholesale price index of Nepal Rastra Bank.

Note:

(3) The amount stated should normally not be less than 1.5 x V/T, the estimated annual turnover in the subject contract based on a straight-line projection of the Engineer's estimated cost (V), over the contract duration (T) in year. The Engineer's estimated cost (V) is taken without VAT and contingencies but including provisional sum. Contract duration less than one year shall be considered one year. The multiplier of 1.5 may be reduced up to1 (one) in accordance with the size, nature and complexity of contracts.

(4) Usually not less than 25 %

(5) Usually not less than 40 %

2.3.3 Financial Resources					
Using Forms FIN - 3 and FIN - 4 in Section IV (Bidding Forms) the Bidder must demonstrate access to, or availability of, financial resources such as liquid assets[3], unencumbered real assets, and other financial resources, (other than any contractual advance payments) to meet the cash-flow requirement of **NRs.** ***32,318,000.00 (Thirty-Two Million Three Hundred Eighteen Thousand)***	must meet requirement	must meet requirement	must meet ***25%*** of the requirement	must meet ***40%*** of the requirement	Form FIN - 3

[3] Liquid Assets mean cash and cash equivalents, short-term financial instruments, short term available-for-sale-securities, marketable securities, trade receivables, short-term financing receivables and other assets that can be converted into cash within ONE YEAR.

Office Chief

Note:

(6) Construction cash flow requirement for a number of months (to the nearest half-month), determined as the total time needed by the Employer to pay a contractor's invoice, allowing for (a) the actual time consumed for construction, from the beginning of the month invoiced, (b) the time needed by the Project Manager to issue the monthly payment certificate, (c) the time needed by the Employer to pay the amount certified, and (d) a contingency period of one month to allow for unforeseen delays. The total period should not exceed three months for estimated cost (without VAT and contingencies but including PS) more than NRs. 250 Millions and for estimated cost (without VAT and contingencies but including PS) less than NRs. 250 Millions, the total period should not exceed 5 months. The assessment of the monthly amount should be based on a straight-line projection of the estimated cash flow requirement over the particular contract period, neglecting the effect of any advance payment and retention monies, but including contingency allowances in the estimated contract cost.]

(7) Usually not less than 25 %

(0) Usually not less than 40 %

2.3.4 Required Bid Capacity					
The bidding capacity of the bidder should be equal to or more than the ***NRs 134,900,000.00 (One Hundred Thirty-Four Million Nine Hundred Thousand).***	must meet requirement	must meet requirement	must meet 25% of the requirement	must meet 40% of the requirement	Form FIN - 4 and Form FIN - 5

Note:

(9) The amount stated should be 80 % to 100 % of Engineer's Estimate (without VAT and Contingencies but including Provision Sum) in round figure

(10) Usually not less than 25 %

(11) Usually not less than 40 %

2.4 Experience

Criteria	Compliance Requirements				Documents Submission Requirement
Requirement	Single Entity	Joint Venture			
		All Partners Combined	Each Partner	One Partner	
2.4.1 General Construction Experience					
Experience under construction contracts in the role of contractor, subcontractor, or management contractor for at least the last ***Five (5)*** years prior to the applications submission deadline.	must meet requirement	not applicable	must meet requirement	not applicable	Form EXP - 1

Note:

(12) Insert number of years in words and figures. The time period is normally 5 years, but may be reduced to not less than 3 years, according to the nature of works.

Criteria	Compliance Requirements				Documents Submission Requirement
Requirement	Single Entity	Joint Venture			
		All Partners Combined	Each Partner	One Partner	
2.4.2 Specific Construction Experience					
(a) Contracts of Similar Size and Nature					
(ii) For Works with Estimated value (without VAT & Contingency but including PS) above NRs. 100 million					
Participation as Prime contractor, management contractor, or subcontractor, within the last ten (10) years, that have been successfully or are substantially[a] completed and that are similar to the proposed works. The similarity shall be based on the physical size, complexity, methods, technology or other characteristics as described; 1 Water Supply Project ***or*** 2 Water Quality Improvement Project ***or*** 3 Sewerage Management Project ***or*** 4 Wastewater Treatment Project ***or*** 5 Stormwater Drainage Project	must meet requirement, in at least One (1) Contract with a value of at least ***NRs 93,076,000.00 (Ninety-Three Million Seventy-Six Thousand)***	not applicable	not applicable	must meet requirement, in at least One (1) Contract with a value of at least ***NRs 93,076,000.00 (Ninety-Three Million Seventy-Six Thousand)***	Form EXP – 2(a)

Only the net amount shall be calculated after deducting the amount for VAT and such amount shall be adjusted to present value by applying wholesale price index of Nepal Rastra Bank.

***Complex works means those works involving complex technology such as tunnel roads, roads (asphalt concrete, Rigid pavement with high strength concrete etc.), major bridges, special bridges (pre stress bridge, arch bridge, cable stayed bridge, suspension bridge etc.), airport, large water supply and wastewater projects, large irrigation projects and their components like Headworks, weir, Barrage, Tunnel works, hydropower projects and similar works. However, in case of complex works like tunnel roads, airports, railway lines, hydropower projects, flyover, viaduct etc. for which experienced domestic bidders may not be available in market, in order to enhance capability of domestic bidders, the qualification criteria may be specified in a similar manner for non-complex works i.e. each partner's requirement may be specified as "not applicable".*

[a] A contract for which a Taking-Over Certificate has been issued shall be considered as substantially completed.

Note:

(13) Insert amount in Nepalese rupees, which is 40% (in above round figure in thousand) of the estimated value

Government of Nepal
Ministry of Urban Development
Office of Chief Supply and Sewerage Management Project Office
Butwal, Rupandehi
Office Chief

(without VAT and contingencies but including provisional sum) of the subject contract.
(14) Insert amount in Nepalese rupees, which is 60% (in above round figure in thousand) of the estimated value (without VAT and contingencies but including provisional sum) of the subject contract.
(15) Only in case of complex works, insert amount which is 10% (in above round figure in thousand) of the estimated value (without VAT and contingencies but including provisional sum) of the subject contract.

Criteria	Compliance Requirements				Documents
Requirement	Single Entity	Joint Venture			Submission Requirement
		All Partners Combined	Each Partner	One Partner	
(b) Construction Experience in Key Activities*					
Participation as Prime contractor, management contractor, or subcontractor, within a last ten (10) years, For the above or other contracts stipulated in 2.4.2(a) above, a minimum annual production rate on construction experience in the following key activities that have been successfully or substantially completed: 1. *Procurement, supplying, laying and jointing of HDPE/PE/GI/DI/CS/ Seamless not less than **50 mm diameter** of length at least **52.00 km** in separate or combined in single/multiple contracts.* 2. *Construction of at least **1** number of reinforced cement concrete **(RCC)** Overhead Reservoir Tank **(OHT)** of at least **100 cum** capacity.*	must meet all requirements	must meet all requirements	not applicable	not applicable	Form EXP - 2(b)

* *Under Criterion 2.4.2 (a), the specified requirements define the similarity of contracts, whereas the key activities or production rates to be specified under Criterion 2.4.2 (b) define the required capability of the Bidder to execute key components of the Works. There shall be no inconsistency or duplication of requirements between Criteria 2.4.2(a) and 2.4.2(b).*

* *For the rate of production, the rate of production shall be on the basis of the average during the entire contract period.*

Office Chief
Ministry of Water Supply and Sewerage Management Office
Butwal, Rupandehi

* *Only the activities having weightage 10 percent or more of the total estimated amount that should be manufactured or built by contractor should be considered as key activities.*

* *Key activities or production rates to be specified shall not restrict innovation and better quality.*

* *Key activities or production rates of different contracts for a particular duration can be added while evaluating. The annual production rate of key activities can be converted to a monthly production rate during the overlap period for better interpretation and evaluation.*

* *While specifying key activities or production rates, it shall be assured and to be recorded by public entity so that sufficient bidders with required qualification are available in market for adequate competition.*

* *Key activities or production rates to be specified shall be unambiguous e.g. environmentally friendly, international/high standard, complex technology etc.*

* *While specifying Key activities or production rates, the similarity shall be based on the complexity, methods or technology to be adopted.*

* *The activities that can be sub-contracted or readily available in the market (e.g. lift, elevator, electrical works, special type of facilities etc.) shall not considered as key activities.*

Office Chief

2.5 Subcontractors

The experience and financial capacity of the sub-contractors shall not be added to those of the Bidder for purposes of qualification of the Bidder.

The sub-contractors proposed shall be fully qualified for their work proposed, and meet the following criteria:

2.5 (a) Nature of Works that can be sub contracted:

(i) ……..

(ii) ……..

Note: Employer should specify the nature of work, if sub-contracting is permitted.

2.5 (b) Qualification Criteria

The proposed sub-contractor shall meet the following requirements:

1) Within the last ten (10) years, completion of at least NRs. ……..(5)……*for work of a similar nature to the work being subcontracted.*
2) Minimum average annual construction turnover for the work being sub contracted of NRs …..(6)….., calculated as total certified payments received for construction contracts in progress or completed, within best three years out of last ten fiscal years.

Note: Delete 2.5(b) if 2.5(a) is not applicable

(5) 80% of the value in Nepalese Rupees (NRs).

*(6) The amount stated should not be less than 1.5 * V/T where V is the proposed value of sub contract works and T is estimated time in year for which the intended sub-contracting work is to be completed. For intended Sub contracting work duration of up to 1 year, T shall be "1".*

Office Chief

Section IV: Bidding Forms

This Section contains the forms which are to be completed by the Bidder and submitted as part of its Bid.

Ministry of Water Supply and Sewerage Management Office
Butwal, Rupandehi
Office Chief

Letter of Technical Bid

The Bidder must accomplish the Letter of Technical Bid in its letter head clearly showing the Bidder's complete name and address.

Date: .....

Name of the contract: .....

Invitation for Bid No.: .....

To: ***[Insert Complete name of Employer]*** .....

We, the undersigned, declare that:

(a) We have examined and have no reservations to the Bidding Documents, including Addenda issued in accordance with Instructions to Bidders (ITB) Clause 8.

(b) We offer to execute in conformity with the Bidding Documents the following Works: ***[Insert Description of the works]***

(c) Our Bid consisting of the Technical Bid and the Price Bid shall be valid for a period of ***[insert validity period as specified in ITB 18.1 of the BDS]*** days from the date fixed for the bid submission deadline in accordance with the Bidding Documents, and it shall remain binding upon us and may be accepted at any time before the expiration of that period.

(d) Our firm, including any subcontractors or suppliers for any part of the Contract, have nationalities from eligible countries in accordance with ITB 4.2 and meet the requirements of ITB 3.4,& ITB 3.5

(e) We are not participating, as a Bidder or as a subcontractor, in more than one Bid in this bidding process in accordance with ITB 4.3(e), other than alternative offers submitted in accordance with ITB 13.

(f) Our firm, its affiliates or subsidiaries, including any Subcontractors or Suppliers for any part of the contract, has not been declared ineligible by DP, under the Employer's country laws or official regulations or by an act of compliance with a decision of the United Nations Security Council;

(g) [We are not a government owned entity] / [We are a government owned entity but meet the requirements of ITB 4.5];[1]

(h) We declare that, we including any subcontractors or suppliers for any part of the contract do not have any conflict of interest in accordance with ITB 4.3 and we have not been punished for an offense relating to the concerned profession or business.

(i) We declare that we are solely responsible for the authenticity of the documents submitted by us. The document and information submitted by us are true and correct. If any document/information given is found to be concealed at a later date, we shall accept any legal actions by the Employer.

(j) We agree to permit the Employer/DP or its representative to inspect our accounts and records and other documents relating to the bid submission and to have them audited by auditors appointed by the

Office Chief

Employer.

(k) If our Bid is accepted, we commit to mobilizing key equipment and personnel in accordance with the requirements set forth in Section VI (Works Requirement) and our technical proposal, or as otherwise agreed with the Employer.

(l) We declare that we have not yet secured five (5)[4] number of construction contract (in open competitive bidding) as described in ITB Sub-Clause 4.9.

Name: ***[insert complete name of the person signing the Bid]***.....

In the capacity of ***[insert legal capacity of person signing the Bid]***.....

Signed ***[signature of the person whose name and capacity are shown above]***.....

Duly authorized to sign the Bid for and on behalf of ***[insert complete name of the Bidder]***.....

Date ***[insert date of signing]***.....

[1] Note: Use one of the two options as appropriate.

[4] Note: Following Procurement of Works contracts shall not be counted for this purpose:

a) The works for which tender were invited or contracts accepted before 2078-12-03 B.S (March 17, 2022 A.D).

b) The works for which tender have been invited and contracts accepted after 2078-12-03 B.S (March 17, 2022 A.D) but the work acceptance report has been approved according to Rule 117 of PPR.

c) The works for which tenders were invited or contracts accepted under all types of foreign assistance.

Office Chief
Water Supply and Sewerage Management Office
Butwal, Rupandehi

Letter of Price Bid

The Bidder must accomplish the Letter of Price Bid in its letterhead clearly showing the Bidder's complete name and address.

Date: .....

Name of the contract: .....

Invitation for Bid No.: .....

To: ***[Insert Complete name of Employer]*** .....

We, the undersigned, declare that:

(a) We have examined and have no reservations to the Bidding Documents, including Addenda issued in accordance with Instructions to Bidders (ITB) Clause 8;

We offer to execute in conformity with the Bidding Documents the following Works: ***[Insert Description of the works]*** .

(c)The total price of our Bid, excluding any discounts offered in item (d) below is: ***[Insert one of the options below as appropriate]*** or when left blank is the Bid Price indicated in the Bill of Quantities.

Option 1, in case of single contract: Total price is: ***[insert the total price of the Bid in words and figures];***

Or

Option 2, in case of multiple lots (contracts): (i) Total price of each lot (contracts): ***[insert the total price of each lot in words and figures]***; (ii) Total price of subject contract [say Lot1] and Lot2 [another contract] ***[insert the total price in words and figures];*** (iii) Total price of subject contract [say Lot1]and Lot3 [another contract] ***[insert the total price in words and figures];*** Total price of subject contract [say Lot1], Lot2 [another contract], Lot3 [another contract], ...***[insert the total price in words and figures]***;

(d) The discounts offered and the methodology for their application for subject contract [single contract] are:..... [For Bidding Documents not provisioning multiple contracts]

Add following if Bidding Document provisions applicability of multiple contracts:

The discounts offered and the methodology for their application for subject contract [say Lot1] and Lot2 [another contract] are:.....

The discounts offered and the methodology for their application for subject contract [say Lot1] and Lot3 [another contract] are:.....

Office Chief

The discounts offered and the methodology for their application for subject contract [say Lot1], Lot2 [another contract] and Lot3 [another contract],.....,
are:.....

[Note:

1. Formulate possible combinations depending upon the number of lots under Bidding Process and modify accordingly Paragraph (c) and (d)]

(e) Our bid shall be valid for a period of ***[insert validity period as specified in ITB 18.1]*** days from the date fixed for the bid submission deadline in accordance with the Bidding Documents, and it shall remain binding upon us and may be accepted at any time before the expiration of that period;

(f) If our bid is accepted, we commit to obtain a performance security in accordance with the Bidding Document;

(g) We have paid, or will pay the following commissions, gratuities, or fees with respect to the bidding process or execution of the Contract:[5]

Name of Recipient	Address	Reason	Amount
.....	.....	.....	.....
.....	.....	.....	.....

(h) We understand that this bid, *together with your written acceptance thereof* included in your notification of award, shall constitute a binding contract between us, until a formal contract is prepared and executed;

(i) We understand that you are not bound to accept the bid closest to the Average Bid Price or any other bid that you may receive; and

(j) We declare that we are solely responsible for the authenticity of the documents submitted by us.

(k) We agree to permit the Employer/DP or its representative to inspect our accounts and records and other documents relating to the bid submission and to have them audited by auditors appointed by the Employer.

Name: ***[insert complete name of the person signing the Bid]***.....

In the capacity of ***[insert legal capacity of person signing the Bid]***.....

Signed ***[signature of the person whose name and capacity are shown above]*** .....

Duly authorized to sign the Bid for and on behalf of ***[insert complete name of the Bidder]***.....

Date ***[insert date of signing]***..... .....

---

5 If none has been paid or is to be paid, indicate "None".

Office Chief

Table of Price Adjustment Data[6]

[To be used if Price Adjustment is applicable as per GCC 53.1]

Code	Index Description	Source of Index*	Base Value and Date	Employer's Proposed Weighting Range (coefficient)	Bidder's Proposed Weighting (coefficient)**
1	2	3	4	5	6
	Non - Adjustable (A)			0.15	0.15
	Labor (b)				
	Materials (c)***				
	Equipment usage (d)				
		Total			1.00

*Normally following source of index shall apply. Public Entity shall choose applicable Index for each item.

(a) Labor: "National Salary and Wage Rate Index"- "Construction Labor" of Nepal Rastra Bank or rate fixed by District Rate Fixation Committee

(b) Material: "National Wholesale Price Index" - Construction Materials" of Nepal Rastra Bank

(c) Equipment usage: "National Wholesale Price Index" - Machinery and Equipment" of Nepal Rastra Bank or "Fuel" Price fixed by Nepal Oil Corporation.

** Bidders proposed weightings should be within the range specified by the Employer in column - 5
*** The materials can be broken down into major construction materials if necessary. In this case the source of index shall be the specified by Employer, preferably as per the published ex-factory price or published price from the sole authorized seller.

[6] Non-compliance of the data (stipulated by the bidder in this table) with requirements described here shall not be grounds for bid rejection and such non-compliance will be subject to clarification and rectification prior to contract award.

Office Chief

Table of Price Adjustment Data[7]

[To be used if Price Adjustment is applicable as per GCC 53.6]

Code	Construction Material*	Unit	Base Price (NRs/Unit) (Ex-factory)	Source (Factory)**
1	2	3	4	5

* Major construction materials to be specified by Employer in column - 2.

** Base Price and source normally to be specified by Employer (or alternatively informed to be proposed by bidder) in column 4 and 5.

Note:

The base prices of the construction materials shall be taken as of 30 days before the deadline for submission of the Bid as quoted by the Bidder and verified by the Employer. For the purpose of calculation of price adjustment, the Ex-factory price of the same source shall be taken into consideration.

[7] Non-compliance of the data (stipulated by the bidder in this table) with requirements described here shall not be grounds for bid rejection and such non-compliance will be subject to clarification and rectification prior to contract award.

Office Chief

Ministry of Infrastructure Development
Department of Water Supply and Sewerage Management
Water Supply and Sewerage Management
Butwal, Rupandehi

Bid Security

Bank Guarantee

Bank's Name, and Address of Issuing Branch or Office

(On Letter head of the Bank)

Beneficiary: .....***[Insert name and address of Employer]*** .....

Date: .....Bid Security No.: .....

We have been informed that. ..... ***[insert name of the Bidder]*** (hereinafter called "the Bidder")intends to submit its bid (hereinafter called "the Bid") to you for the execution of .....***[Insert name of Contract]*** ..... under Invitation for Bids No. .....***[insert IFB No.]*** ("the IFB").

Furthermore, we understand that, according to your conditions, bids must be supported by a bid guarantee.

At the request of the Bidder, we..... . ***[Insert name of Bank]*** ..... hereby irrevocably undertake to pay you any sum or sums not exceeding in total an amount of Nepalese Rupees . . ..***[Insert amount in figures and amount in words}*** ..... upon receipt by us of your first demand in writing accompanied by a written statement stating that the Bidder is in breach of its obligation(s) under the bid conditions, because the Bidder:

(a) has withdrawn or modifies its Bid:

i) during the period of bid validity specified by the Bidder on the Letter of Technical and Price Bid, in case of electronic submission

(ii) from the period twenty-four hours prior to bid submission deadline up to the period of bid validity specified by the Bidder on the Letter of Technical Bid and Price Bid, in case of hard copy submission; or

(b) does not accept the correction of errors in accordance with the Instructions to Bidders (hereinafter "the ITB"); or

(c) changes the prices or substance of the bid while providing information pursuant to clause 27.1 of ITB; or

(d) having been notified of the acceptance of its Bid by the Employer during the period of bid validity, (i) fails or refuses to execute the Contract Agreement, or (ii) fails or refuses to furnish the performance security, in accordance with the ITB; or

(e) is involved in fraud and corruption in accordance with the ITB; or

(f) if the bidder fails to inform about the saturation of the maximum number of contracts as per ITB 4.10.

This guarantee will remain in force up to and including the date .....***number***.....days after the deadline for submission of Bids as such deadline is stated in the instructions to Bidders or as it may be extended by the Employer, notice of which extension(s) to the Bank is hereby waived. Any demand in respect of this guarantee should reach the Bank not letter than the above date.

This Bank guarantee shall not be withdrawn or released merely upon return of the original guarantee by the Bidder unless notified by you for the release of the guarantee.

This guarantee is subject to the Uniform Rules for Demand Guarantees (URDG), 2010 Revisions, ICC Publication No. 758, except that the supporting statement under Article 15(a) is hereby excluded.

. . .Bank's seal and authorized signature(s) . . .

Note:

The bid security of ..... has been counter guaranteed by the Bank ..... on ..... (Applicable for Bid Security of Foreign Banks).

Office Chief
Ministry of Water Supply and Sewerage Management Office
Butwal, Rupandehi

Technical Proposal Format

Personnel

Equipment

Site Organization

Method Statement

Mobilization Schedule

Construction Schedule

Others

Personnel

Office Chief

Form PER - 1: Proposed Personnel

Bidders should provide the names of suitably qualified personnel to meet the specified requirements for each of the positions listed in Section VI (Work Requirements). The data on their experience should be supplied using the Form below for each candidate.

No.	Name	Position*	Academic Qualification	Total Work Experience [Years]	Experience in Similar Works [years]
1.					
2.					
3.					
4.					
5.					

* As listed in Section VI (Work Requirements).

Office Chief

Form PER - 2: Resume of Proposed Personnel

The Bidder shall provide all the information requested below.

Position*		
Personal Information	Name	Date of Birth
	Professional qualifications	
Present employment	Name of employer	
	Address of employer	
	Telephone	Contact (manager/personnel officer)
	Fax	E-mail
	Job title	Years with present employer

Summarize professional experience over the last twenty years in reverse chronological order. Indicate particular technical and managerial experience relevant to the project.

From	To	Company, Project, Position and Relevant Technical and Management Experience

Office Chief

Equipment

Form EQU: Equipment

The Bidder shall provide adequate information to demonstrate clearly that it has the capability to meet the requirements for the key equipment listed in Section VI (Work Requirements). A separate Form shall be prepared for each item of equipment listed, or for alternative equipment proposed by the Bidder.

(i) For the equipment under Bidder's ownership

No.	Equipment Type and Characteristics	Total Nos. of Equipment under Bidder's Ownership	No. of Equipment engaged/proposed for ongoing/committed contracts	Nos. of Equipment proposed for this contract
1.				
2.				
3.				
4.				
5.				

(ii) For the Equipment to be leased/hired

No.	Equipment Type and Characteristics	Total Nos. of Equipment under the ownership of lease/hire provider	No. of Equipment engaged/committed for other works	Nos. of Equipment proposed to be leased/hired for this contract
1.				
2.				
3.				
4.				
5.				

Type of Equipment		
Equipment Information	Name of manufacturer	Model and power rating
	Capacity	Year of manufacture
Current Status	Current location	
	Details of current commitments	
Source	Indicate source of the equipment ☐ Owned ☐ Rented ☐ Leased ☐ Specially manufactured	

The following information shall be provided only for equipment not owned by the Bidder.

Office Chief

Owner	Name of owner	
	Address of owner	
	Telephone	Contact name and title
	Fax	email
Agreements	Details of rental / lease / manufacture agreements specific to the project	

The Bidder shall be solely responsible for the data provided. However, this shall not limit the right of Employer to verify the authenticity of submitted information.

Office Chief

Government of Nepal
Ministry of Urban Development
Water Supply and Sewerage Management Office
Butwal, Rupandehi

Bidder's Information and Qualification Format

Site Organization

Method Statement

Mobilization Schedule

Construction Schedule

Others

Office Chief

Bidder's Qualification

To establish its qualifications to perform the contract in accordance with Section III (Evaluation and Qualification Criteria) the Bidder shall provide the information requested in the corresponding Information Sheets included hereunder.

Form ELI - 1: Bidder's Information Sheet

Bidder's Information	
Bidder's legal name	
In case of JV, legal name of each partner	
Bidder's country of constitution	
Bidder's year of constitution	
Bidder's legal address in country of constitution	
Bidder's authorized representative (name, address, telephone numbers, fax numbers, e-mail address)	
Attached are copies of the following original documents.	
1. In case of single entity, articles of incorporation or constitution of the legal entity named above, in accordance with ITB 4.1 and 4.2. 2. Authorization to represent the firm or JV named in above, in accordance with ITB 20.2. 3. In case of JV, letter of intent to form JV or JV agreement, in accordance with ITB 4.1. 4. In case of a government-owned entity, any additional documents not covered under 1 above required to comply with ITB 4.5.	

Office Chief

Form ELI - 2: JV Information Sheet

Each member of a JV must fill in this form

JV / Specialist Subcontractor Information	
Bidder's legal name	
JV Partner's or Subcontractor's legal name	
JV Partner's or Subcontractor's country of constitution	
JV Partner's or Subcontractor's year of constitution	
JV Partner's or Subcontractor's legal address in country of constitution	
JV Partner's or Subcontractor's authorized representative information (name, address, telephone numbers, fax numbers, e-mail address)	

Attached are copies of the following original documents.

1. articles of incorporation or constitution of the legal entity named above, in accordance with ITB 4.1 and 4.2.
2. Authorization to represent the firm named above, in accordance with ITB 20.2.
3. In the case of government-owned entity, documents establishing legal and financial autonomy and compliance with commercial law, in accordance with ITB 4.5.

Office Chief

Government of Nepal
Ministry of Infrastructure Development
Department of Water Supply and Sewerage Management
Water Supply and Sewerage Management
Butwal, Rupandehi

Form ELI - 3: Bidder's Running Contracts[8]

Each member of a JV must fill in this form

	Bidder's Running Contracts				
Name of office	Contract Identification no.	Source of Fund*	Date of issuance of Letter of Acceptance	Status of contract**	Date of Issuance of Taking Over Certificate***

* Mention GON funded or DP funded or Other PE (Insert name) funded

** Mention "Yet to sign" if contract is not signed, "Running" if contract has been signed and contract is running and "Substantially completed" if taking over certificate has been issued.

** Insert date of issuance of taking over certificate if the awarded contract has been substantially completed and taking over certificate has been issued.

[8]:Note Following Procurement of Works contracts shall not be counted for this purpose

a) The works for which tender were invited or contracts accepted before 2078-12-03 B.S (March 17, 2022 A.D).

b) The works for which tender have been invited and contracts accepted after 2078-12-03 B.S (March 17, 2022 A.D) but the work acceptance report has been approved according to Rule 117 of PPR.

c) The works for which tenders were invited or contracts accepted under all types of foreign assistance

Office Chief

Form LIT - 1: Pending Litigation

Each member of a JV must fill in this form

Pending Litigation			
☐ No pending litigation in accordance with Criteria 2.2 of Section III (Evaluation and Qualification Criteria) ☐ Pending litigation in accordance with Criteria 2.2 of Section III (Evaluation and Qualification Criteria)			
Year	**Matter in Dispute**	**Value of Pending Claim in NRS**	**Value of Pending Claim as a Percentage on Net Worth**

Office Chief

Government of Nepal
Ministry of Infrastructure Development
Department of Water Supply and Sewerage Management
Water Supply and Sewerage Management Office
Butwal, Rupandehi

Form FIN - 1: Financial Situation

Each Bidder or member of a JV must fill in this form

Financial Data for Previous 3 Years [in NRS]		
Year 1 :	**Year 2 :**	**Year 3 :**

Information from Balance Sheet

Total Assets			
Total Liabilities			
Net Worth			
Current Assets			
Current Liabilities			

Information from Income Statement

Total Revenues			
Profit Before Tax			
Profit After Tax			

- Attached are copies of financial statements (balance sheets including all related notes, and income statements) for the last three or above years, as indicated above, complying with the following conditions.
- All such documents reflect the financial situation of the Bidder or partner to a JV, and not sister or parent companies.
- Historic financial statements must be audited by a certified auditor.
- Historic financial statements must be complete, including all notes to the financial statements.
- Historic financial statements must correspond to accounting periods already completed and audited (no statements for partial periods shall be requested or accepted).

Government of Nepal
Ministry of Infrastructure Development
Department of Water Supply and Sewerage Management
Water Supply and Sewerage Management
Butwal, Rupandehi
Office Chief

Form FIN - 2: Average Annual Construction Turnover

Each Bidder or member of a JV must fill in this form

The information supplied should be the Annual Turnover of the Bidder or each member of a JV in terms of the amounts billed to clients for each year for work in progress or completed to NRs at the end of the period reported.

Annual Turnover Data for the Last 10 Years (Construction only)	
Year	Amount Currency

- **Average Annual Construction Turnover (Best three years within the last 10 years)**

Office Chief

Form FIN - 3: Financial Resources

Specify proposed sources of financing, such as liquid assets, unencumbered real assets and other financial means, net of current commitments, available to meet the total construction cash flow demands of the subject contract or contracts as indicated in Section III (Evaluation and Qualification Criteria).

Financial Resources		
No.	**Source of financing**	**Amount (in NRS)**
1		
2		
3		

Office Chief

Government of Nepal
Ministry of Infrastructure Development
Department of Water Supply and Sewerage Management Office
Water Supply and Sewerage Management Office
Butwal, Rupandehi

Form FIN – 4: Bid Capacity

Each Bidder or member of a JV must fill in this form

Bid Capacity = [(5 x A) – B]

A = Average Annual Turnover of best three years out of last ten fiscal years.

B = Annual Value of the existing commitments and works (ongoing) to be completed, calculated from **FIN-4.**

SN	Name of Bidder	Pan No.	A, in Million	B, in Million	Bid Capacity, in Million
1					
2					
3					

Total Bid Capacity:

Signature of Bidder

Government of Nepal
Ministry of Infrastructure Development
Department of Water Supply and Sewerage Management
Water Supply and Sewerage Management Office
Butwal, Rupandehi

Office Chief

Form FIN- 5: Current Contract Commitments / Works in Progress

Bidders and each partner to a JV should provide information on their current commitments on all contracts that have been awarded, or for which a letter of intent or acceptance has been received, or for contracts approaching completion, but for which an unqualified, full completion certificate has yet to be issued.

Current Contract Commitments (For Calculation of B with reference of FIN-3)

No.	Name of Contract	Name of the Contractor/s	Employer's Contact Address, Tel, Fax	Contract Share in % (a)	Contract Amount in Millions (b)	Contract Date(yyyy-mm) (c)	Initial or Revised Contract Duration (months) (d)	Value of outstanding works [In Millions, NRS]# (e)	Estimated Time in Month to Complete the outstanding works (f) = (c) + (d) – Date of Invitation of Bid (f)
1									
2									
3									
4									

Signature of Bidder

 # The Outstanding Works means Contract Price (excluding Vat) minus Work Evaluated by Employer till the reference date. Bidder shall have to submit the relevant documentary evidence to substantiate the facts/figures.

Note 1: "B" shall be calculated as : $B = \sum \left[\frac{(e) \times (a)}{(f)} \right] x12$ **, If (f) is less than 12, then value of (f) shall be taken as 12.**

Note 2: If Initial or Revised Contract Date is run out with respect to Date of Invitation of Bid, the Estimated Time in Month to Complete the outstanding works shall be taken equal to 12 months.

Form EXP - 1: General Construction Experience

Office Chief

Each Bidder or member of a JV must fill in this form.

General Construction Experience				
Starting Month Year	**Ending Month Year**	**Year**	**Contract Identification and Name and Address of Employer Brief Description of the Works Executed by the Bidder**	**Role of Bidder**

Office Chief

Form EXP - 2(a): Specific Construction Experience

Fill up one (1) form per contract.

Contract of Similar Size and Nature			
Contract No..... of.....	Contract Identification		
Award Date		Completion Date	
Role in Contract	☐ Contractor	☐ Management Contractor	☐ Subcontractor
Total Contract Amount	☐ NRS		
If Partner in a JV or subcontractor, specify participation of total contract amount	Percent of Total	Amount	
Employer's Name Address Telephone/Fax Number E-mail			
Description of the similarity in accordance with Criteria 2.4.2 (a) of Section III			
Participation as Prime contractor, management contractor, or subcontractor, within the last ten (10) years, that have been successfully or are substantially completed and that are similar to the proposed works. The similarity shall be based on the physical size, complexity, methods, technology or other characteristics as described; 1 Water Supply Project or 2 Water Quality Improvement Project or 3 Sewerage Management Project or 4 Wastewater Treatment Project or 5 Stormwater Drainage Project in at least One (1) Contract with a value of at least NRs 93,076,000.00 (Ninety-Three Million seventy-Six Thousand)			

Office Chief

Butwal, Rupandehi

Form EXP - 2(b): Specific Construction Experience in Key Activities

Fill up one (1) form per contract.

Contract of Similar Size and Nature			
Contract No..... of.....	Contract Identification		
Award Date		Completion Date	
Role in Contract	☐ Contractor	☐ Management Contractor	☐ Subcontractor
Total Contract Amount	☐ NRS		
If Partner in a JV or subcontractor, specify participation of total contract amount	Percent of Total	Amount	
Employer's Name Address Telephone/Fax Number E-mail			
Description of the similarity in accordance with Criteria 2.4.2 (a) of Section III			
Participation as Prime contractor, management contractor, or subcontractor, within a last ten (10) years, For the above or other contracts stipulated in 2.4.2(a) above, a minimum annual production rate on construction experience in the following key activities that have been successfully or substantially completed: 1. Procurement, supplying, laying and jointing of HDPE/PE/GI/DI/CS/Seamless not less than 50 mm diameter of length at least 52.00 km in separate or combined in single/multiple contracts. 2. Construction of at least 1 number of reinforced cement concrete (RCC) Overhead Reservoir Tank (OHT) of at least 100 cum capacity.			

Office Chief

Section V - Eligible Countries

[This section contains the list of eligible countries. Select one option, either GoN Funded or DP Funded.]

For GoN funded*: [with estimate up to NRs. 5 billion]*

For the purpose of ITB 4.2: "**Nepal**"; and

For the purpose of Country-of-Origin ITB 5.1 and GCC 79.2: **"all Countries"**

Office Chief

Part II: REQUIREMENTS

Table of Clauses

Section VI: Works Requirements (WRQ)

Scope of Work 77

Specifications 78

Notes on the Specifications 78

Sample Clause: Equivalency of Standards and Codes 79

Drawings 80

Supplementary Information 81

Personal Requirements 85

Equipment Requirements 86

Section VII: Bill of Quantities 84

Notes for Unit Rate Contracts: 84

Preamble of Bill of Quantities 87

A. General 87

B. Day work Schedule 90

Provisional Sums 88

Bill of Quantities 90

Office Chief

Section VI: Works Requirements

This Section contains the Scope of Work, Specification, the Drawings, supplementary information that describe the Works to be procured, Personnel Requirements and Equipment Requirements.

Office Chief

Ministry of Infrastructure and Transport
Department of Water Supply and Sewerage Management
Water Supply and Sewerage Office
Butwal, Rupandehi

Scope of Work

The works consist of construction works of Deep Tubewell (DTW) - 3 Nos., Borehole Platform and Casing well Platform - 3 Nos., RCC Overhead tank (225 cum) - 1 Nos., RCC Ground Reservoir Tank – 1 No., Aeration Tower and Pressure Filter – 3 Nos., Valve Chambers – 35 Nos., Washout Chambers – 5 Nos., Guard House – 1 No., Pump House – 3 Nos., Office Building - 1 No., House Connections from PE pipes - 2379 Nos., Pipeline works and other associated works under project Construction of Entire Works of Imiliya Water Supply Project, Buddhabhumi-09, Kapilvastu

Office Chief

Specifications

Notes on the Specifications

A set of precise and clear specifications is a prerequisite for Bidders to respond realistically and competitively to the requirements of the Employer without qualifying or conditioning their Bids. The specifications must be drafted to permit the widest possible competition and, at the same time, present a clear statement of the required standards of workmanship, materials, and performance of the goods and services to be procured. Only if this is done will the objectives of economy, efficiency and fairness in procurement be realized, responsiveness of Bids be ensured, and the subsequent task of bid evaluation facilitated. The specifications should require that all goods and materials to be incorporated in the Works be new, unused, of the most recent or current models, and incorporate all recent improvements in design and materials unless provided otherwise in the Contract.

Samples of specifications from previous similar projects are useful in this respect. The use of metric units is encouraged by the Funding Agency in case of funding assisted projects. Most specifications are normally written specially by the Employer or Project Manager to suit the Contract Works in hand. The available standard specification of works of Ministry of Physical Infrastructure and Transport, DoLI and Other line Ministries can be adopted for respective civil construction works.

There are considerable advantages in standardizing General Specifications for repetitive Works in recognized public sectors, such as highways, urban housing, irrigation, and water supply, in the same country or region where similar conditions prevail. The General Specifications should cover all classes of workmanship, materials, and equipment commonly involved in construction; however, it may not necessarily be adequate to be used in a particular Works Contract and may necessitate preparation of Particular (Special) Specifications to amend and or supplement the provision of the General Specifications to meet the requirement of the particular Works.

Care must be taken in drafting specifications to ensure that they are not restrictive. In the specification of standards for goods, materials, and workmanship, recognized international standards should be used as much as possible. Where other particular standards are used, whether national standards of Nepal or other standards, the specifications should state that goods, materials, and workmanship that meet other authoritative standards, and which ensure substantially equal or higher quality than the standards mentioned, will also be acceptable.

Employers should decide whether technical solutions to specified parts of the Works are to be permitted. Alternatives are appropriate in cases where obvious (and potentially less costly) alternatives are possible to the technical solutions indicated in the Procurement Documents for certain elements of the Works, taking into consideration the comparative specialized advantage of potential bidders. For example:

The Employer should provide a description of the selected parts of the Works with appropriate references to Drawings, Specifications, Bill of Quantities, and Design or Performance criteria, stating that the alternative solutions if applicable shall be at least structurally and functionally equivalent to the basic design parameters and specifications.

Such alternative solutions shall be accompanied by all information necessary for a complete evaluation by the Employer, including drawings, design calculations, technical specifications, breakdown of prices, proposed construction methodology, and other relevant details.

Sample Clause: Equivalency of Standards and Codes

Wherever reference is made in the Contract to specific standards and codes to be met by the goods and materials to be furnished, and work performed or tested, the provisions of the latest current edition or revision of the relevant standards and codes in effect shall apply, unless otherwise expressly stated in the Contract. Where such standards and codes are national, or relate to a particular country or region, other authoritative standards that ensure a substantially equal or higher quality than the standards and codes specified will be accepted subject to the Project Manager's prior review and written consent. Differences between the standards specified and the proposed alternative standards shall be fully described in writing by the Contractor and submitted to the Project Manager at least 30 days prior to the date when the Contractor desires the Project Manager's consent. In the event the Project Manager determines that such proposed deviations do not ensure substantially equal or higher quality, the Contractor shall comply with the standards specified in the documents.

These Notes for Preparing Specifications are intended only as information for the Employer or the person drafting the Procurement Documents. They should not be included in the final documents.

[Insert Specifications]

Government of Nepal
Ministry of Infrastructure Development
Department of Water Supply and Sewerage Management Office
Water Supply and Sewerage Management
Butwal, Rupandehi

Office Chief

Government of Nepal
Ministry of Infrastructure Development
Department of Water Supply and Sewerage Management

TECHNICAL SPECIFICATIONS

General Technical Specifications

Government of Nepal
Ministry of Infrastructure Development
Department of Water Supply and Sewerage Management Office
Water Supply and Sewerage Management Office
Butwal, Rupandehi
Office Chief

1 ITEMS OF GENERAL APPLICATION 1
1.1 General 1
1.1.1 Scope 1
1.1.1.1 Scope of the Contract 1
1.1.2 Scope of Works 2
1.1.3 Definitions 3
1.1.3.1 General 3
1.1.3.2 Tolerances 3
1.1.3.3 Measurement and Payment 3
1.1.4 Languages 3
1.2 Facilities for the Engineer 3
1.2.1 Engineering Laboratory 3
1.2.2 Delay in provision of engineer facilities 4
1.2.3 Cost for engineer facilities 4
1.2.4 Provision of Vehicle Facility 4
1.2.5 Operation and Maintenance of Vehicle 4
1.2.6 Survey Equipment and Field Assistance 5
1.2.7 Safety Equipment 5
1.2.8 Testing of Material and Workmanship 5
1.2.9 Measurement and Payment 5
1.3 Access to and Possession of Site 5
1.3.1 The Site 5
1.3.2 Temporary Wayleaves and Access 5
1.3.3 Access to Adjoining Property 5
1.3.4 Permanent Right-of-Way 5
1.3.5 Measurement and Payment 5
1.4 Provision and Maintenance of Site Installations 5
1.4.1 Camp for Contractor's Staff 5
1.4.2 Contractor's Offices, Stores and Services 6
1.4.3 Preparation of the temporary Stockyard in the Site of Sub-project 6
1.4.4 Contractor's Construction Equipment 6
1.4.5 Water Supply 6
1.4.6 Sanitation 6
1.4.7 Sewage and Waste Disposal 6
1.4.8 Energy Supply 6
1.4.9 Pollution 7
1.4.10 Supply of Fuel, Lubricants, etc 7
1.4.11 Temporary Telephone and Internet Connections 7
1.4.12 First Aid 7
1.4.13 Fire Protection 7
1.4.14 Contractor's Canteen 7
1.4.15 Testing Facilities, Laboratory 7
1.4.16 Site Safety 8
1.4.17 Protection of Overhead and Underground Services 8
1.4.18 Signboards 8
1.4.19 Site Roads, Loading and Turning Areas 9
1.4.20 Site Drainage 9
1.4.21 Cleaning-up of Site 9
1.4.22 Measurement and Payment 9

Government of Nepal
Ministry of Infrastructure Development
Department of Water Supply and Sewerage Management Office
Butwal, Rupandehi

Office Chief

1.5 Provision of Temporary Facilities 9
1.5.1 Temporary Diversions of Utilities 9
1.5.2 Detours and Traffic Control 10
1.5.3 Provision of Temporary Services 10
1.5.4 Protection of Adjoining Property 11
1.5.4.1 Land 11
1.5.4.2 Buildings and other Structures 11
1.5.5 Reinstatement Upon Completion 11
1.5.6 Measurement and Payment 11
1.6 Coordination with Other Authorities 11
1.6.1 Statutory Services 11
1.6.2 Notices, Permits 11
1.6.3 Witnessing and Post-Construction Clearances 11
1.6.4 Measurement and Payment 12
1.7 Submissions by the Contractor 12
1.7.1 Pre-Construction Surveys and Setting Out 12
1.7.2 Detailed Design of Temporary Works 12
1.7.3 Working Drawings 12
1.7.4 As-Built Drawings and GIS Data Creation 13
1.7.4.1 As-Built Drawings 13
1.7.4.2 GIS Data Creation 13
1.7.5 Construction Programme and Progress of Works 14
1.7.5.1 Construction Programme 14
1.7.5.2 Updating, Monitoring and Progress Reporting 14
1.7.5.3 Detailed Fortnightly Programme 14
1.7.5.4 Progress Reports 14
1.7.6 Operation and Maintenance Manual 15
1.7.7 Record / Progress Photographs 15
1.7.8 Measurement and Payment 15
1.8 Quality Control 15
1.8.1 Quality Control Plan and Procedures 15
1.8.2 Sampling and Testing 16
1.8.3 Inspection and Acceptance 16
1.8.4 Materials/Plant Certificates 17
1.8.5 Site Records 17
1.8.6 Daily Log Book 17
1.8.7 Local Training for Operation and Maintenance 18
1.8.8 Measurement and Payment 18
1.9 Standards, Codes and Abbreviations 18
1.9.1 Reference Standards and Codes 18
1.9.2 Metric Units 18
1.9.3 Abbreviations 18
1.9.4 Measurement and Payment 20
1.10 Securities and Insurances 20
1.10.1 Performance Security 20
1.10.2 Insurance of Works and Contractor's Equipment 20
1.10.3 Third Party Insurance Policy 20
1.10.4 Insurance of Employer's Personnel 20
1.10.5 Measurement and Payment 21

Government of Nepal
Ministry of Infrastructure Development
Department of Water Supply and Sewerage Management
Water Supply and Sewerage Management Office
Butwal, Rupandehi

Office Chief

1.10.6 Other Provisional Items 21
1.11 Items Supplied by the Employer 21
2 CIVIL ENGINEERING WORK 22
2.1 Site Clearance 22
2.1.1 Scope 22
2.1.2 Interpretations 22
2.1.2.1 Supporting Specifications 22
2.1.2.2 Application 22
2.1.2.3 Definitions 22
2.1.3 Materials 22
2.1.4 Construction Equipment 22
2.1.5 Construction and Workmanship 22
2.1.5.1 Areas to be Cleared and Grubbed 22
2.1.5.2 Cutting of Trees 22
2.1.5.3 Clearing 23
2.1.5.4 Grubbing 23
2.1.5.5 Re-clearing of Vegetation 23
2.1.5.6 Dismantling 23
2.1.5.7 Measurement and Payment 23
2.2 Earthworks 24
2.2.1 Scope 25
2.2.2 Interpretations 25
2.2.2.1 Supporting Specifications 25
2.2.2.2 Application 25
2.2.2.3 Definitions 25
2.2.3 Materials 25
2.2.3.1 Classification for Excavation Purposes 25
2.2.3.2 Classification for Placing Purposes 25
2.2.3.3 Selection 26
2.2.3.4 Explosives and Blasting 26
2.2.3.5 Gabions 26
2.2.4 Construction Equipment 27
2.2.5 Construction and Workmanship 27
2.2.5.1 Precautions 27
2.2.5.2 Methods and Procedures 27
2.2.6 Tolerances 28
2.2.6.1 Positions, dimensions, levels, etc 32
2.2.6.2 Moisture content and density 32
2.2.7 Testing and Acceptance 32
2.2.8 Measurement and Payment 32
2.3 Cement Concrete 32
2.3.1 Scope 34
2.3.2 Interpretations 34
2.3.2.1 Supporting specifications 34
2.3.2.2 Application 34
2.3.2.3 Definitions 34
2.3.2.4 Abbreviations 34
2.3.3 Materials 35
2.3.3.1 Approval of materials 35

Government of Nepal
Ministry of Infrastructure Development
Department of Water Supply and Sewerage Management Office
Butwal, Rupandehi

Office Chief

2.3.3.2 Cement 35
2.3.3.3 Water 36
2.3.3.4 Aggregates 36
2.3.3.5 All-In-Aggregates (Combined Aggregates) 36
2.3.3.6 Admixtures 37
2.3.3.7 Reinforcement 37
2.3.3.8 Storage capacity 37
2.3.3.9 Deteriorated material 37
2.3.3.10 Waterstops 37
2.3.3.11 Joint filler 38
2.3.3.12 Joint sealant 38
2.3.3.13 Waterproof Membrane 38
2.3.3.14 Concrete Curing Compound 38
2.3.3.15 Premixed Grout 38
2.3.3.16 Bituminous Paint 38
2.3.4 Construction Equipment 38
2.3.4.1 General 38
2.3.4.2 Mixing equipment 38
2.3.4.3 Vibrators 39
2.3.4.4 Formwork 39
2.3.4.5 Scaffolding and ladders 39
2.3.4.6 Casting beds and moulds 39
2.3.4.7 Construction Equipment for handling, lifting, and stacking 39
2.3.5 Construction and Workmanship 40
2.3.5.1 Reinforcement 40
2.3.5.2 Splicing of Reinforcement 40
2.3.5.3 Placing of Reinforcement 41
2.3.5.4 Cover of the Reinforcement 41
2.3.5.5 Formwork 41
2.3.5.6 Holes, chases, and fixing blocks 42
2.3.5.7 Pipes and conduits 42
2.3.6 Concrete 42
2.3.6.1 Quality 42
2.3.6.2 Grades of Concrete 42
2.3.6.3 Mix Proportion 43
2.3.6.4 Design Mix Concrete 43
2.3.6.5 Selection of Water Content and Fine Aggregates Ratio 43
2.3.6.6 Nominal Mix Concrete 43
2.3.6.7 Mixing of Concrete 44
2.3.6.8 Control Over Production of Concrete 44
2.3.6.9 Batching of Concrete 44
2.3.6.10 Transportation and Placing of Concrete 44
2.3.6.11 Compaction of Concrete 46
2.3.6.12 Construction Joints in Concrete 46
2.3.6.13 Curing and Protection of Concrete 47
2.3.6.14 Concrete surfaces 47
2.3.6.15 Watertight concrete 47
2.3.6.16 Concrete in wet ground 48
2.3.6.17 Grouting 48

Government of Nepal
Ministry of Infrastructure Development
Department of Water Supply and Sewerage Management
Water Supply and Sewerage Management Office
Butwal, Rupandehi
Office Chief

2.3.6.18 Concrete pumping 48
2.3.6.19 Defects 48
2.3.6.20 Handling and erection of precast units 48
2.3.6.21 Joint Sealers 48
2.3.6.22 Concrete for benching 49
2.3.6.23 Records 49
2.3.7 Tolerances 49
2.3.7.1 General 49
2.3.7.2 Permissible Deviations 49
2.3.8 Tests and Acceptance 50
2.3.8.1 Facilities and frequencies of sampling 52
2.3.8.2 Testing 52
2.3.8.3 Acceptance criteria for designed mix concrete 52
2.3.8.4 Individual Load Tests on Precast Units 52
2.3.9 Measurement and Payment if not otherwise specified in the BOQ 53
2.3.9.1 Formwork 53
2.3.9.2 Reinforcement 53
2.3.9.3 Concrete 53
2.3.9.4 Miscellaneous Items 53
2.4 Brickworks 54
2.4.1 Scope 55
2.4.2 Interpretations 55
2.4.2.1 Supporting Specifications 55
2.4.2.2 Application 55
2.4.3 Materials 55
2.4.3.1 Bricks 55
2.4.3.2 Hollow concrete blocks 55
2.4.3.3 Cement for mortar 55
2.4.3.4 Sand for mortar 55
2.4.3.5 Water for mortar 56
2.4.3.6 Construction Equipment 56
2.4.4 Construction and Workmanship 56
2.4.4.1 Mortar 56
2.4.4.2 Workability of mortar 56
2.4.4.3 Workability of grout 56
2.4.4.4 Cement mortar mixing and using period 56
2.4.4.5 Mixing of mortar 56
2.4.4.6 Brick laying 56
2.4.4.7 Half brick thick wall and Curtain Walls 57
2.4.4.8 Exposed Brick Work 57
2.4.4.9 Brick manholes / Chambers 58
2.4.4.10 HONEY COMB BRICK WORK 58
2.4.4.11 Brick Work in Arches 58
2.4.4.12 Brick Pavement 58
2.4.4.13 Brick Soling 58
2.4.5 Tolerances 58
2.4.6 Measurement and Payment 59
2.5 Stone Masonry Works 59
2.5.1 Scope 60
..... 60

Government of Nepal
Ministry of Infrastructure Development
Department of Water Supply and Sewerage Management
Water Supply and Sewerage Management Office
Butwal, Rupandehi
Office Chief

2.5.2 Interpretations 60
2.5.2.1 Supporting Specifications 60
2.5.2.2 Application 60
2.5.3 Materials 60
2.5.3.1 Stone 60
2.5.3.2 Cement for mortar 60
2.5.3.3 Sand for mortar 60
2.5.3.4 Water for mortar 60
2.5.3.5 Construction Equipment 60
2.5.4 General Construction and Workmanship 60
2.5.5 Random Rubble Masonry (Un-coursed and Coursed) 61
2.5.5.1 Dressing 61
2.5.5.2 Insertion of Chips 61
2.5.5.3 Hearting Stones 61
2.5.5.4 Bond Stones 61
2.5.5.5 Quoin Stone 61
2.5.5.6 Plum Stone 61
2.5.5.7 Wet Foundation 62
2.5.5.8 Laying 62
2.5.5.9 Items to Include in the unit rate 63
2.5.5.10 Joints 63
2.5.6 Dry Rubble Masonry for Retaining structures 63
2.5.7 Dry Stone Pitching/Dry Rubble masonry 63
2.5.8 Stone Soling Work Blinding in Floor 64
2.5.9 Measurement and Payment 64
2.6 Cement Plaster Works 65
2.6.1 Scope 65
2.6.2 Interpretations 65
2.6.2.1 Supporting Specifications 65
2.6.2.2 Application 65
2.6.3 Materials 65
2.6.3.1 Cement 65
2.6.3.2 Sand 65
2.6.3.3 Water for mortar 65
2.6.3.4 Scaffolding and ladders 65
2.6.3.5 Care of Tools and Accessories 65
2.6.3.6 Plastering 66
2.6.4 Preparation of Plaster 66
2.6.4.1 Proportioning 66
2.6.4.2 Quantity of Water 66
2.6.4.3 Mixing 66
2.6.5 General Precaution in Plastering 67
2.6.5.1 Cleanliness and Protection of Existing Work 67
2.6.5.2 Cleaning off on Completion 67
2.6.5.3 Suction Adjustment 67
2.6.5.4 Adjustment of Working to the Setting Properties of Plaster 67
2.6.5.5 Control of Cracking 67
2.6.5.6 Maintenance of Proper Time Intervals 67
2.6.6 Preliminary Programming of Work 67

Government of Nepal
Ministry of Infrastructure Development
Department of Water Supply and Sewerage Management Office
Water Supply and Sewerage Management Office
Butwal, Rupandehi
Office Chief

2.6.7 Sequence of operations 68
2.6.8 Special Finishing Textures 68
2.6.9 Trueness of Plaster System 68
2.6.10 Curing 68
2.6.11 Approval by the Engineer of plaster work 68
2.6.12 Inspection and Diagnosis –Applicable Only if the Engineer Deems it Necessary 68
2.6.13 Plastering Defects & Remedies – Applicable Only If the Engineer Deems It Necessary 69
2.6.14 Measurement and Payment 69
2.7 Other Finishes 70
2.7.1 Scope 70
2.7.2 Interpretations 70
2.7.2.1 Supporting Specifications 70
2.7.2.2 Application 70
2.7.3 Materials 70
2.7.4 Construction Equipment 71
2.7.5 Construction and Workmanship 71
2.7.5.1 Cement Concrete Floor 71
2.7.5.2 Cement Floor (Cement Screed) 71
2.7.5.3 Cement Floor Finishing (Cement Punning) 71
2.7.5.4 Pointing 72
2.7.5.5 Terrazzo Tiles 72
2.7.5.6 Ceramic Tiles 72
2.7.5.7 Waterproof Cement Paint 73
2.7.5.8 Oil bound distemper 73
2.7.5.9 Distempering 73
2.7.5.10 Plastic Emulsion Paint 74
2.7.5.11 Ready-mixed Enamel Paint 74
2.7.5.12 French Polish 74
2.7.5.13 Roofing 74
2.7.6 Tolerances 74
2.7.7 Measurement and Payment 74
2.8 Steel and Metalwork 75
2.8.1 Scope 75
2.8.2 Structural Steel Work 75
2.8.3 Bolts and Nuts 75
2.8.4 Steel Chequered Plate 75
2.8.5 Handrailing 75
2.8.6 Ladder 75
2.8.7 Step Irons 76
2.8.8 Fencing 76
2.8.9 Aluminium Structures and Sections 76
2.8.10 Galvanized Metals 76
2.8.11 Dissimilar Metals 76
2.8.12 Manhole Covers, Surface Boxes, etc. 76
2.8.12.1 Metal Doors, Windows, Ventilators, Glazed Shutters etc 77
2.8.12.2 Window grills, fences, railing and gates 77
2.8.12.3 Collapsible gates and rolling shutters 77
2.8.12.4 Welding Consumables 77
2.8.12.5 Coating Materials 77

Government of Nepal
Ministry of Infrastructure Development
Department of Water Supply and Sewerage Management Office
Water Supply and Sewerage Management
Butwal, Rupandehi

Office Chief

2.8.13 Measurement and Payment 77
2.9 Carpentry and Joinery Works 78
2.9.1 Scope 78
2.9.2 Interpretations 78
2.9.2.1 Supporting Specifications 78
2.9.2.2 Application 78
2.9.3 Materials 78
2.9.3.1 Timber 78
2.9.3.2 Preservatives 79
2.9.3.3 Cover Moulds 79
2.9.3.4 Rebates 79
2.9.3.5 Post Keys 79
2.9.3.6 Hold Fast 79
2.9.3.7 Panelled Shutter 79
2.9.3.8 Flush Door Shutter 79
2.9.3.9 Fixtures & Fastening 80
2.9.4 Construction Equipment 80
2.9.5 Construction and Workmanship 80
2.9.6 Test and Acceptance 81
2.9.7 Measurement and Payment 81
2.10 Roads and Parking Areas 82
2.10.1 Scope 82
2.10.2 Interpretations 82
2.10.2.1 Supporting Specifications 82
2.10.2.2 Application 82
2.10.3 Materials 82
2.10.3.1 Classification for excavation purposes 82
2.10.3.2 Classification for placing purposes 82
2.10.4 Construction Equipment 85
2.10.4.1 General 85
2.10.4.2 Mixing Equipment 85
2.10.4.3 Binder Distributors 85
2.10.5 Construction and Workmanship 86
2.10.5.1 General 86
2.10.5.2 Compaction 86
2.10.5.3 Cut and Borrow 86
2.10.5.4 Formation of Embankment 86
2.10.5.5 Sub-base and Gravelling 87
2.10.5.6 Water Bound Macadam Base 87
2.10.5.7 Prime Coat 89
2.10.5.8 Asphaltic Concrete 89
2.10.5.9 Surface Dressing Work 91
2.10.5.9.5 Aftercare and Control of Traffic 94
2.10.6 Tolerances 94
2.10.6.1 Embankments 94
2.10.6.2 Sub base and Gravelling 94
2.10.6.3 Waterbound Macadam 95
2.10.6.4 Prime Coat 95
2.10.6.5 Asphaltic Concrete 95

Government of Nepal
Ministry of Infrastructure Development
Department of Water Supply and Sewerage Management
Water Supply and Sewerage Management Office
Butwal, Rupandehi
Office Chief

2.10.7 Tests and Acceptance 95
2.10.7.1 Embankments 95
2.10.7.2 Sub Base and Gravelling 95
2.10.7.3 Waterbound Macadam 95
2.10.7.4 Prime Coat 95
2.10.7.5 Asphaltic Concrete 95
2.10.8 Measurement and Payment 96
2.10.8.1 Excavation and Fill 96
2.10.8.2 Subbase and Gravelling 96
2.10.8.3 Water Bound Macadam for Base 96
2.10.8.4 Prime Coat 96
2.10.8.5 Asphaltic Concrete 97
2.10.8.6 Surface Dressing 97
3 PIPELINES AND RELATED WORKS 98
3.1 Pipe Trenches 98
3.1.1 Scope 98
3.1.2 Interpretations 98
3.1.2.1 Supporting Specifications 98
3.1.2.2 Application 98
3.1.2.3 Definitions 98
3.1.3 Materials 98
3.1.4 Construction Equipment 99
3.1.5 Construction and Workmanship 99
3.1.5.1 Precautions 99
3.1.5.2 Maximum base width 99
3.1.5.3 Maximum Length of open Trench per Gang 99
3.1.5.4 Site clearance 99
3.1.5.5 Excavation 100
3.1.5.6 Widening Trench at Joints etc 100
3.1.5.7 Over-Excavation of Trench Bottoms 100
3.1.5.8 Trench bottom 100
3.1.5.9 Backfilling 100
3.1.5.10 Compaction 101
3.1.5.11 Reinstatement of surfaces 101
3.1.6 Tolerances 101
3.1.6.1 Alignment and grade 101
3.1.6.2 Moisture content and density 101
3.1.7 Testing and Acceptance 101
3.1.8 Measurement and Payment 102
3.2 Pipe Bedding and Fill 103
3.2.1 Scope 103
3.2.2 Interpretations 103
3.2.2.1 Supporting Specifications 103
3.2.2.2 Application 103
3.2.2.3 Definitions 103
3.2.3 Materials 103
3.2.3.1 Imported selected granular material 103
3.2.3.2 Imported selected fill material 104
3.2.3.3 Bedding 104

Government of Nepal
Ministry of Infrastructure Development
Department of Water Supply and Sewerage Management
Water Supply and Sewerage Management Office
Butwal, Rupandehi

Office Chief

3.2.3.4 Selection 104
3.2.4 Construction Equipment 104
3.2.5 Construction and Workmanship 104
3.2.5.1 General 104
3.2.5.2 Placing and compacting of bedding for rigid pipes 105
3.2.5.3 Concrete surround 105
3.2.6 Tolerances 105
3.2.7 Testing and Acceptance 105
3.2.8 Measurement and Payment 105
3.3 Supply, Delivery and Installation of Water pipelines 106
3.3.1 Overall Scope 106
3.3.2 Supply and Delivery of DI Pipe, Fittings, Appurtenances and Other Specials 106
3.3.2.1 General and Storage 106
3.3.2.2 Materials and Packing 109
3.3.2.3 Supply of Goods 111
3.3.2.4 Ductile Iron Pipe and Fittings 113
3.3.2.5 Slip-on Type couplings 115
3.3.2.6 Mechanical Coupling 115
3.3.2.7 Valves 115
3.3.2.8 Polyethylene Pipes and Fittings 122
3.3.3 Installation of Water Pipelines 129
3.3.3.1 Interpretations 129
3.3.3.2 Materials 129
3.3.3.3 Construction Equipment 129
3.3.3.4 Construction and Workmanship for DI Pipes 130
3.3.3.5 Tolerances 133
3.3.3.6 Pressure and Leakage Test 134
3.3.3.7 Sectional Allowable Lengths of Installed Pipe for pressure and leakage test 135
3.3.3.8 Field Testing of Valves 136
3.3.4 Supply and Installation of Galvanized steel pipes and fittings 136
3.3.4.1 General 136
3.3.4.2 Material and Standard 136
3.3.4.3 Dimensions 136
3.3.4.4 Tolerance 136
3.3.4.5 Specials and fittings 136
3.3.4.6 Jointing 136
3.3.4.7 Laying of GI pipes and fittings 136
3.3.4.8 Other Specials and Fittings Required for GI Pipelines reinstatement 137
3.3.5 Technical specifications and particular conditions: PVC-O pipes 140
3.3.5.1 General 1
1.1 Ambient Conditions 1
1.2 Potable Water Certification 1
1.3 Toxic Materials and Environmental Safety 1
1.4 Quality Assurance and Third-Party Inspection 1
1.5 Testing After Delivery 1
1.6 Pipes Packing and Protection 2
1.7 Identification and Marking 2
1.8 Handling 2
1.9 Pre-Shipment Inspection 2

Government of Nepal
Ministry of Infrastructure Development
Department of Water Supply and Sewerage Management Office
Butwal, Rupandehi
Office Chief

1.10 Rejected Goods 3
1.11 Experience of Manufacturer 3
1.12 Approved Manufacturer's Instructions 4
2 PVC-O Pipes Technical Specifications 5
2.1 Standards and Compliance 5
2.2 Pipe Properties 5
2.3 Connection Types 5
3 PVC-O Fittings 6
3.1 Standards for Fittings 6
3.2 Fitting Types and Dimensions 6
4 Installation and Disinfection 7
4.1 Installation 7
4.2 Disinfection 7
4.3 Transport and Delivery 7
3.3.6 Measurement and Payment 144
4 WATER METERS 138
4.1 Household Revenue Meters 138
4.1.1 General 138
4.1.2 Materials 138
4.1.3 Design and Construction 138
4.1.4 Markings 138
4.1.5 Meter Performance 139
4.1.6 Factory Warranty 139
4.1.7 Essential Features 139
4.1.8 Testing 140
4.2 Bulk Water Meters 140
4.2.1 General Applications 140
4.2.2 Reference to standards 140
4.2.3 Shop testing and inspection 141
4.2.4 Submittals 141
4.2.5 Handling and storing 141
4.2.6 General Design and Construction 141
4.2.7 Requirements 141
4.2.8 Technical requirements 142
4.2.9 Markings 142
4.2.10 Characteristic flows 143
4.2.11 Accuracies 143
4.2.12 Packing 143
4.2.13 Factory Warranty 143
5 ELECTRICAL INSTALLATIONS 144
5.1 Scope 144
5.2 Interpretations 144
5.2.1 Supporting Specifications 144
5.2.2 Application 144
5.2.3 Abbreviations 144
5.3 Materials 145
5.3.1 Low Voltage Distribution Boards 145
5.3.2 Fuses 145
5.3.3 Miniature and Moulded Case Circuit Breakers 145

Government of Nepal
Ministry of Infrastructure Development
Department of Water Supply and Sewerage Management Office
Butwal, Rupandehi
Office Chief

5.3.4 Residual Current Circuit Breakers 145
5.3.5 Cables 145
5.3.6 Site Lighting 146
5.3.7 Lighting Luminaries 147
5.3.8 Lamps 147
5.3.9 Lighting Switches 147
5.3.10 Small Power Outlets 147
5.3.11 Ceiling Fans 147
5.3.12 Conduits 147
5.3.13 Earth Electrodes 148
5.4 Plant And Equipment 148
5.5 Construction and Workmanship 148
5.5.1 Regulations and Standards 148
5.5.2 Cable Installation 148
5.5.3 Distribution Boards 151
5.5.4 Small Power Outlets 151
5.5.5 Lighting Switches 151
5.5.6 Lighting Luminaries 151
5.5.7 Earthing and Bonding 152
5.5.8 Earth Electrodes 152
5.5.9 Site Lighting 153
5.6 Test and Acceptance 153
5.7 Measurement and Payment 153
6 PLUMBING 154
6.1 Scope 154
6.2 Interpretations 154
6.2.1 Supporting Specifications 154
6.2.2 Application 154
6.2.3 Applicable codes 154
6.3 General Requirements 155
6.4 Pipes and fittings 157
6.5 Material, fittings, appliances and structures for water supply 157
6.5.1 General 157
6.5.2 Fixtures and Appliances 157
6.5.2.1 Brass or Gunmetal water fittings 157
6.5.2.2 Bib cock (tap)s and stop cock (tap) 157
6.5.2.3 Screw Down Wheeled Stop Tap 158
6.5.2.4 Self closing taps and other special fittings 158
6.5.2.5 Valves for Plumbing 158
6.5.3 Water Storage tanks on terraces 159
6.5.4 Underground Water Storage Tanks 159
6.5.5 Fittings and accessories for RCC Water Reservoirs 159
6.6 Sanitary fittings and appliances 159
6.6.1 General 159
6.6.2 Protection 159
6.6.3 Workmanship 160
6.6.4 Testing 160
6.6.5 Bath, Lavatory and Mixing Taps 160
6.6.6 Wash basins 160

Government of Nepal
Ministry of Infrastructure Development
Department of Water Supply and Sewerage Management
Water Supply and Sewerage Management Office
Butwal, Rupandehi
Office Chief

6.6.7 Mirror 160
6.6.8 Sink 160
6.6.9 Floor Trap 161
6.6.10 Water closet 161
6.6.10.1 Orissa Pattern Water Closet 161
6.6.10.2 European type white glazed earthenware water-closet 161
6.6.10.3 Measurement 162
6.6.11 Urinals 162
6.6.11.1 Half stall Urinals 162
6.6.11.2 Squatting Plate Urinal 162
6.6.11.3 Measurement 162
6.6.12 Toilet Requisites 162
6.6.12.1 Towel Rail 162
6.6.12.2 Toilet paper holder 162
6.6.12.3 Shower 162
6.6.12.4 Towel pipe and towel cloth stand etc. 162
6.6.12.5 Measurement 162
6.6.13 Water Heaters 162
6.6.14 Soil, Water and Vent Pipes 163
6.6.14.1 Cast Iron Rain Water Pipes 163
6.6.14.2 Cast Iron Soil Vent Pipes 163
6.6.15 Gully traps 163
6.6.16 Cast iron Nahani trap 163
7 FILTRATION MEDIA 164
7.1 Scope 164
7.2 Terminology 164
7.3 Filter Sand 164
7.3.1 Quality Requirements 164
7.3.2 Grain Shape, Shape Variation and Sampling 164
7.4 Filter Gravel 164
7.4.1 Quality Requirements 164
7.4.2 Sampling 164
8 RAPID SAND FILTERS AND ACCESSORIES 165
8.1 Rapid Sand Filer 165
8.2 Air Blower and Motor 166
8.2.1 Air Blower 166
8.2.2 Motor 166
9 PUMPS AND RELATED ACCESSORIES 167
9.1 Pumps 167
9.2 Components of Submersible Pumps 167
9.3 Submersible Pumps 167
9.4 Submersible Motors 167
9.5 Bearings 167
9.6 Pump Set/Assembly Components 167
9.7 Pump Head Assembly 167
9.8 Riser Pipe and Fittings 168
9.9 Pump Bowl Assembly 168
9.10 Suction Case with Strainer 168

Government of Nepal
Ministry of Infrastructure Development
Department of Water Supply and Sewerage Management Office
Butwal, Rupandehi

Office Chief

9.11 Submersible Motor 168
9.12 Submersible Cable (Cable for Submersible pumps) 169
9.13 Armoured Power Cable 169
9.14 Motor Control Panel 169
9.15 Documentation 171
9.16 Guarantee of Performance 171
9.17 Operation Maintenance Manual and Spare Part List 171

10 TRANSFORMERS, ELECTRICAL FEEDER LINES AND INSTALLATIONS 176

10.1 Transformer 176
10.2 Diesel Generator 176
10.3 Voltage Stabilizer 176
10.4 11KV AAAC XLPE Insulated Covered Conductor 176
10.5 Disc Insulator Fittings 176
10.6 Galvanised Steel Bolts, Nuts and Miscellaneous Fastening Components 176
10.7 Crossarms And Bracing Angles 176
10.8 Flat Crossarm Brace 176
10.9 Pole Clamps 176
10.9.1 Core 176
10.9.2 Winding 176
10.9.3 Auto Control Unit 176
10.9.4 Technical Parameters 176
10.10 Surge Arrester 176
10.10.1 Scope 176
10.10.2 System Parameters 176
10.10.3 Service Condition 176
10.10.4 Applicable Standards 176
10.10.5 Technical Parameters 176
10.10.6 Basic Features 176
10.10.7 Additional Requirements 176
10.10.8 Inspection And Testing 176
10.10.9 Bid Documentation 176
10.11 Distribution Cutout (Drop-Out Fuses) 186
10.11.1 Scope 186
10.11.2 System Parameters 186
10.11.3 Service Condition 186
10.11.4 Applicable Standards 186
10.11.5 Technical Parameters 186
10.11.6 Basic Features 186
10.11.7 Additional Requirements 186
10.11.8 Inspection And Testing 186
10.11.9 Bid Documentation 186
10.12 Fuse Link 185
10.12.1 Scope 186
10.12.2 Description 186
10.12.3 Tests 186
10.12.4 Bid Documentation 186
10.13 Distribution Panel Board 185
10.13.1 Scope 186

Government of Nepal
Ministry of Infrastructure Development
Department of Water Supply and Sewerage Management
Water Supply and Sewerage Management Office
Butwal, Rupandehi

Office Chief

10.13.2 Description 186
10.13.3 Bid Documentation 186
10.14 Moulded-Case Circuit Breakers (MCCB) 186
10.14.1 Scope 186
10.14.2 System Parameters 186
10.14.3 Service Condition 186
10.14.4 Applicable Standards 186
10.14.5 Technical Parameters 186
10.15 Steel Tubular Pole 186
10.15.1 Scope 186
10.15.2 Description 186
10.15.3 Material 186
10.16 Pre-stressed Concrete (PSC) Pole 195
10.16.1 Scope 195
10.16.2 Description 196
10.16.3 Load 196
10.16.4 Materials 196
10.16.5 Design 196
10.16.6 Tests 197
10.16.7 Markings 197
10.16.8 Bid Documentation 197
10.17 Porcelain Insulators and Fittings 198
10.17.1 Scope 198
10.17.2 General 198
10.17.3 Specific Requirements 199
10.17.4 Marking 200
10.17.5 Tests 200
10.17.6 Bid Documentation 200
10.18 Stay Sets 202
10.18.1 Scope 202
10.18.2 Description 202
10.18.3 Fabrication 202
10.18.4 Tests 202
10.18.5 Bid Documentation 203
10.19 Stay Wire 203
10.19.1 Scope 203
10.19.2 Description of Strands 204
10.19.3 Packing 204
10.19.4 Bid Documentation 204
10.19.5 Tests 204
10.20 11 kV Air Break Switch 205
10.20.1 Scope 205
10.20.2 AB Switches 205
10.20.3 Post Insulators 205
10.20.4 Temperature Rise 205
10.20.5 Main Contacts 205
10.20.6 Connectors 205
10.20.7 Operating Mechanism 205
10.20.8 Arcing Horns 205

Government of Nepal
Ministry of Infrastructure Development
Department of Water Supply and Sewerage Management
Water Supply and Sewerage Management Office
Butwal, Rupandehi
Office Chief

10.20.9 Bush 205
10.20.10 Design, Materials and Workmanship 205
10.20.11 Dimension of 11 kV AB Switches in (Max.) Tolerance 5% 205
10.20.12 Terminal Connectors 205
10.20.13 Routine Test Certificate 205
10.20.14 Acceptance Test 206
10.20.15 Name Plate 206
10.21 LT Power Cable (PVC) 206
10.21.1 Scope 206
10.21.2 Rated Voltage 206
10.21.3 Service Condition 206
10.21.4 Applicable Standards 207
10.21.5 Technical Parameters 207
10.21.6 Basic Features 207
10.21.7 Cable Identification 208
10.21.8 Packaging 208
10.21.9 Inspection And Testing 208
10.21.10 Bid Documentation 208
11 OTHER ELECTRICAL INSTALLATIONS 209
11.1 Water Level Indicator 209
11.1.1 Float less Type Level Switch In Water Tanks 210
11.1.2 Control of Duty/ Standby Pumps 210
11.1.3 Pump Indicator 210
11.2 LT Voltage Stabilizer 211
11.2.1 Core 211
11.2.2 Winding 211
11.2.3 Auto Control Unit 211
11.2.4 Technical Parameters 211
12 ALUMINIUM DOORS, WINDOWS AND VENTILATORS 212
12.1 Material and sections 212
12.2 Fabrication 212
12.3 Glass 212
12.3.1 Clear Glass 212
12.3.2 Tinted Glass 213
12.4 Drawings/ Documents 213
12.5 Notes 213
12.6 Measurement for Payment 213
13 FRENCH SPIRIT POLISHING 214
13.1 Polishing New Surface 214
13.1.1 Preparation of Surface 214
13.1.2 Application 214
13.1.3 Measurements 214
13.2 Polishing Old Surface 214
13.2.1 Preparation of Surface 214
13.2.2 Application 214
13.2.3 Measurements 214
14 MISCELLANEOUS 215

Government of Nepal
Ministry of Infrastructure Development
Department of Water Supply and Sewerage Management Office
Butwal, Rupandehi
Office Chief

14.1 Surface Discharge Plate 215
14.2 Turfing 215
14.3 Sand Filling 215
14.4 Brick bat filling 215
14.5 Transportation of Surplus Materials 215
14.6 Geotextile 216
14.7 Gas Vents 216
14.8 Electro-fusion Welding Machine 216
14.9 Manual scraper 216
14.10 Pillar Type Saddle Clamp (Top Loading) – For Pipe Size 63 to 315 MM 217
14.11 Strap Type Saddle Clamp (Top Loading) – For Pipe Size 63 to 630 MM 217
14.12 Pipe Restraining, Alignment and Re-rounding Clamps 217
14.13 Pipe Cutter- Wedge type 218
14.14 Apparatus and Equipment for Water Quality Laboratory 218
14.14.1 pH Meter 218
14.14.2 Lab Nephelometer (Turbid meter) 218
14.14.3 Electrical Conductivity Meter 218
14.14.4 Handheld Pocket Residual Chlorine Analyser 219
14.14.5 Thermometer 219
14.15 Resilient Bearing Strip 219
14.16 Stainless Steel Strip 220
14.17 Technical Specifications for Pressure Filter 220
14.17.1 Chemical Doser 220
14.17.2 Aeration Tower 220
14.17.3 Pressure Filter 221
14.17.4 Accessories 221
14.18 Bore-Hole Drilling 222
14.18.1 General 222
14.18.1.1 Description of the work 222
14.18.1.1.1 Requirements, Specification, Standards and Brand Names 222
14.18.1.1.2 Contractor's Work Program 222
14.18.1.1.3 Other Works 222
14.18.2 Materials 222
14.18.2.1 General 222
14.18.2.2 Inspection and Testing 223
14.18.2.3 Standard Specifications 223
14.18.3 Housing, Casing and Slotted Pipes 223
14.18.4 Tubewell Construction 224
14.18.4.1 General 224
14.18.4.2 Drilling 224
14.18.4.3 Tubewell Assembly 225
14.18.4.4 Gravel Packing 225
14.18.4.5 Well Development 225
14.18.4.6 Pumping Test 225
14.18.5 Measurement and Payment 226
14.19 Injection Grouting (For OHT) 226
14.19.1 General 226
14.19.2 Definition of Terms 226
14.19.3 Injection Process 226

14.19.4 Protection, Cleaning and Safety 230

Government of Nepal
Ministry of Infrastructure Development
Department of Water Supply and Sewerage Management
Water Supply and Sewerage Management Office
Butwal, Rupandehi

Office Chief

Government of Nepal
Ministry of Infrastructure Development
Department of Water Supply and Sewerage Management Office
Water Supply and Sewerage Management Office
Butwal, Rupandehi

Office Chief

1 ITEMS OF GENERAL APPLICATION

1.1 General

1.1.1 Scope

These Technical Specifications cover principles, responsibilities, and requirements for items that will be applicable to all works pertinent for laying of transmission pipeline, construction of intake, reservoir and other civil works including laying of pipelines, repair, rehabilitation, cleaning, other small works and operation and maintenance of the system if stated in the BOQ.

These specifications shall be read in conjunction with the Conditions of Contract, The Agreement, the Bills of Quantities (BOQ) and the Drawings.

The specification provided cover the Works under the Contract, If the Contractor requires additional specifications for more explicit description of the Works or to supplement the existing specifications, or any other specifications to complete the Works, the Contractor shall submit such additional or supplementary specifications for the approval by the Engineer. All costs incurred for the additional specifications under the clause are deemed to be included in other unit rates quoted in the Bill of Quantities.

1.1.1.1 Scope of the Contract

This Contract includes but is not limited to the procurement and construction of:

- Construction and development of deep tube wells.
- Construction of water treatment plants/pressure filters.
- Construction of OHT
- Supply and laying of SS, DI, GI and PE pipes and fittings for proposed transmission and distribution lines
- Supply and erection of transmission lines and other electrical connections
- Construction of Water User Association's Office building, meeting hall, pump operation houses, Generator house, Chlorination house and Toilet with Septic Tank & Soak pit.
- Construction of Valve Chamber, Surface Valve Boxes, Boundary Wall and Fencing,
- Supply and installation of pumps, generators, electrical panels, and it's all related accessories..

In order to complete above mentioned construction works the contractor shall carry out:

a) All temporary works and facilities including establishment and removal thereof support, supplement, or aid construction, access and other related works for the below.

b) Dismantling and removing of all damaged pipelines and civil structure as per the instructions of the Engineer including supply of all pipes, fittings, appurtenances, other specials and other construction materials required for the work.

c) Preparation of Site and storage-area/store-house for proper storage of the materials and goods to smooth implementation of the work.

d) Laying of High Tensile Steel (HTS), Ductile Iron (DI), Galvanized Iron (GI) and Polyethylene (PE) pipes for transmission and distribution with installation of fittings, appurtenances, and other specials.

e) Joining of old DI/GI/PE pipes with newly supplied HTS/DI/GI/PE pipes for all type of connection.

f) All necessary valve chambers (for air, pressure-relief, scour-washout and line control valves), special river/stream crossing, thrust block, anchor blocks, installation of all related pipe fittings and concrete works.

g) Supply of all necessary material and laying/installation for the complete work of reinstatement (water mains, sewer pipes, other utilities and associated civil works including road reinstatement) in service area.

h) Production of working and "as-built drawings and training of staff of the Employer in the installation of the pipelines and other related facilities.

i) Correction of defects during DLP period (12 Months).

Government of Nepal
Ministry of Infrastructure Development
Department of Water Supply and Sewerage Management Office
Water Supply and Sewerage Management Office
Butwal, Rupandehi

Office Chief

1.1.2 Scope of Works

The activities to be undertaken by the Contractor within this Contract include the following: -

a) To carry out all necessary topographic surveys, soils investigations, laboratory analyses or related investigations where necessary to supplement the data provided by the employer. The Contractor's attention is drawn to:

- The need to carry out regular soil pH and resistivity measurement to determine the type of corrosion for ductile iron pipes.
- The need to determine the bearing pressure at the location of storage tank, water treatment plant, office buildings, in thrust block and other structures as per the recommended by the engineer.
- Hydrogeological investigation for infiltration gallery to confirm the design discharge.

b) To prepare working drawings for all elements of the works.

c) To undertake all steps necessary for temporary way, leave facilities and/or upgrading of roads and bridges, all related to access to the Site, or other related matters, where his opinion differ significantly from those produced by the Employer.

d) Setup/Preparation of stockyards and store house for pipes, valves fitting and other materials and equipment.

e) To take all steps necessary for the temporary or permanent diversion of services and the maintenance of services during the execution of the works, including diversion of overhead power lines, sewers and other underground services along the route of the pipelines.

f) To supply all pipes, valves, fittings, appurtenances and other materials and equipment required for construction of the works. The Contractor's supply items for the installation may include manufacture, testing, collection, transportation and delivery to Site. The Contractor will be responsible for ensuring that all procedures are adequately covered and that the materials fully conform to the Contract requirements. These responsibilities will include all necessary charges or dues related to insurance, freight, taxes (including customs and excise duties, surcharges etc.) and all testing and inspection for quality control.

g) To provide all necessary staff (including project manager, civil engineers, administrators, site supervision personnel) and workmen (including all necessary specialists, operators, tradesmen, artisans etc. in addition to semi-skilled and unskilled workers) necessary for execution of the works through to completion and for commissioning/trial run and defect liability period. Where appropriate, the contract shall provide all suitable facilities and accommodation for the staff and workmen and he/she shall make provision for all costs related to such provision and for medical, re-location, taxes or other expenses.

h) To provide all equipment, machinery, tools etc. and related spares for maintenance and consumables necessary for implementation of the works.

i) To provide all project offices, stores, workshops and facilities necessary for use by the Employer, Engineer and support staff and for the Contractor himself and his support staff.

j) To undertake all operations necessary to complete the works. These operations shall include: excavation, provision, haulage and installation of suitable bedding and backfill material and disposal of surplus excavated material; distribution, laying and jointing of pipes; installation of all special pipe work, valves etc. and construction of all related concrete or other activities together with all testing and disinfection of completed works. The Contractor's attention is drawn to the restricted working space in some of the stretches. In this stretches work in addition to that associated with the water main, will include but not be limited to, removal and replacement of existing sewer and water mains laid in the road.

k) To liaise with other contractors on the site and to ensure harmonious co-operation with them so that conflicts are avoided and areas of common interest, construction interface or potential overlaps are addressed without cost to the Employer or delays in completion.

l) To prepare documentary records of the works in the form of "as-built" drawings and GIS data, schedules etc., and to train staff of the Employer in the procedures for laying pipes, valves and fittings.

m) All the above activities shall be performed in a professional way and with good engineering and/or constructional practice. Upon completion of the works the scheme shall be fully operational with minimum disruption or inconvenience to interested parties, including landowners, and there shall be no outstanding matters requiring attention.

Government of Nepal
Ministry of Infrastructure Development
Department of Water Supply and Sewerage Management Office
Water Supply and Sewerage Management Office
Butwal, Rupandehi

Office Chief

1.1.3 Definitions

1.1.3.1 General

Acceptable/Approved (Approval) - Acceptable to/approved (approval) by the Engineer in writing.

Agreed - Agreed in writing.

As detailed - As detailed on the drawings.

Authorized/ordered/rejected - Authorized/ordered/rejected by the Engineer in writing.

Designated - Shown on the drawings or otherwise specified by the Engineer or, in relation to an item scheduled in the Bill of Quantities, description of an item.

Indicated - Indicated in or reasonably to be inferred from the contract or indicated in writing by the Engineer.

Instructed/directed/permitted - Instructed/directed/ permitted by the Engineer.

Satisfactory - Capable of fulfilling or having fulfilled the intended function.

Service - Any pipeline, cable, duct etc. for conveying or transmitting any fluid, power, or other matter.

Submitted - Submitted to the Engineer.

Working easement – Area required by the Contractor for execution of the Works, including the permanent right of way obtained or land purchased by the Employer plus any temporary way leaves arranged by the Contractor.

Working strip - The working easement on the pipeline route.

1.1.3.2 Tolerances

Deviation - The difference between the actual (i.e., measured) size or position and the specified size or position.

Permissible deviation - The specified limit(s) of deviation.

Tolerance - The range between the limits within which a size or position must lie.

1.1.3.3 Measurement and Payment

Bill/schedule - The bill/schedule of quantities.

Billed/scheduled rate - The unit rate or price entered in the bill/schedule at which the Contractor undertakes to execute the particular work or to provide the required material, article or service, or to do any or all of these things, as set out in the item concerned.

Billed/scheduled - Listed in the bill/schedule of quantities.

1.1.4 Languages

All drawings, instructions, signs, notices, nameplates, etc. for use in the operation and maintenance of the completed works shall be in English.

1.2 Facilities for the Engineer

1.2.1 Engineering Laboratory

The Laboratory shall be at vicinity of the project site and provided to the dimensions herein after given and as directed by the Engineer to the full satisfaction of the Engineer. On completion of the project, the facilities and contents, equipment and furniture will become the property of the Contractor.

The laboratory building shall contain the following rooms and with net areas approximately as follows:

1. Laboratory	12 m2
2. Office	9 m2
3. Toilet with commode, washbasin, mirror, towels holder, etc.	4 m2
4. Storage room	9 m2

The Contractor shall provide sufficient water supply as well as power at all times for all lighting, other electrical appliances and apparatus. All power shall be 220 volts 50 cycles except as otherwise specified or directed by the Engineer or may be required for equipment contained in the laboratory or supplied by the Contractor. Room(s) shall be to the satisfaction of Engineer with acceptable finish.

1.2.1.1 Furniture for Engineering Laboratory

Following Furniture shall be supplied by the Contractor for the Laboratory: Worktables and shelves shall be provided as directed by the Engineer.

- 5 wooden chairs

Government of Nepal
Ministry of Infrastructure Development
Department of Water Supply and Sewerage Management Office
Water Supply and Sewerage Management Office
Butwal, Rupandehi

Office Chief

- 2 wooden tables, 70x140cm
- 1 steel almirah (large) locking type

1.2.1.2 Laboratory Equipment and Testing

i. All equipment/ apparatus necessary for the regular testing of material and workmanship shall be provided by the Contractor in the field for the purposes of conducting the test of the works. The Contractor shall provide field laboratory testing apparatus required for tests such as moisture content. Sieve analysis, liquid limit, plastic limit, penetration permeability density, compaction, compression strength etc. Any off-site tests needed to be conducted outside the Contractor's laboratory has to be approved by the Engineer.

ii. The Contractor shall also be responsible for proper maintenance, lighting, power, water supply, and all consumables required for testing for the duration of the contract. Laboratory equipment shall be maintained and be in good working all the time.

iii. The laboratory shall be adequately staffed and equipped by the Contractor so that there shall never occur any interruption to construction activities resulting from the need to carry out tests required under the contract. All samples and records shall be preserved as per the instruction of the Engineer.

The Contractor shall make all arrangements for sampling, transportation, and preparations for regular site laboratory testing as well as off- site testing by the Engineer

1.2.2 Delay in provision of engineer's facilities

In the event the Contractor does not provide, or complete to the satisfaction of the Engineer, the required facilities outlined in the Clause 1.2 FACILITIES FOR ENGINEER, herein within the specified time limit of two weeks after award of the Contract then the Engineer may arrange to rent alternate equivalent facilities. This requirement will be related to the Contractor's own schedule and level of activity. The Contractor will be responsible for the cost of providing such temporary facilities as the engineer may deem necessary in this period. Furthermore, the Contractor's first monthly Payment Certificate may be submitted only after written acceptance by the Engineer of the facilities.

1.2.3 Cost for engineer facilities

The cost of the facilities for the Engineer as mentioned in the clause "1.2 Facilities for engineer, shall be covered under Contractor's overhead cost. The cost should compensate for furnishing all material, equipment, tools and incidental necessary to complete and maintain the facilities including all furniture, potable water, electricity, sanitary installations, expendables and providing support staff etc.

The following items shall also be provided by the Contractor at his own expenses until expiration of the Contract.

a) Building and accommodation for the Contractor's own and his workmen use.
b) Supply of water for Works and for drinking purposes by means of storage tanks and available at all times.
c) Supply of electricity at all times including standby generators to make the electricity available at all times.
d) Maintenance and replacement parts for repairs of the laboratory.
e) Unskilled labour at least (Six) for materials testing and field surveys.

All the laboratory equipment including all other additional purchase for laboratory provided by the Contractor will remain the property of the Contractor.

1.2.4 Provision of Vehicle Facility

The vehicle supplied for the use of Engineer (for construction supervision purpose) during the project period (max of 90 days) should be four-wheel drive with double cab.

1.2.5 Operation and Maintenance of Vehicle

The vehicle shall be licensed and insured for use on the public highway with comprehensive insurance cover for any qualified driver authorized by the Engineer, together with any authorized passengers and the carriage of good or samples. The Contractor shall provide a competent, qualified driver, subject to approval by Engineer, or Engineer's Representative, holding a valid driver's license as a driver of similar vehicle types. The Contractor shall provide fuel, oil and maintenance in conformity with the vehicle manufactures.

Government of Nepal
Ministry of Infrastructure Development
Department of Water Supply and Sewerage Management Office
Water Supply and Sewerage Management Office
Butwal, Rupandehi

Office Chief

1.2.6 Survey Equipment and Field Assistance

The Contractor shall make available to the Engineer suitably educated and trained surveyors/ assistants and laborers for use on and about the Site in sufficient numbers and at all reasonable times.

The following set of survey equipment shall be provided in the project for the use of the Engineer's staff, and these equipment's shall be maintained in good condition throughout the Contract period:

a) 1 no electronic total station with optical plummet, automatic vertical index, data storage on memory card, single prism range 1 km, internal battery, down and uploading of data via memory card and serial port, internal programs for setting out, traverse and free stationing. Accuracy: Distance ± 2 mm + 2 ppm; Angle ± 3" include Accessories for total station as: Tripod, Tribrach, 2 internal batteries, 2 external batteries with cables, Charger with cables and Accessories for targets to include: 4 tripods, 4 targets (tribrach with optical plummet, adapter with 1 prism), adapter with 3 prisms, pole with adapter and 1 prism, pole extension;
b) 1 no. engineering levels - Wild NAKI with Tripod GST20 or equivalent,
c) 1 nos 100 m tapes (fibreglass) and 2 nos 30 m tapes (fibreglass)
d) 2 nos metric metal levelling staffs (3 packs of 4 pieces each) 3 meter long
e) 4 nos surveyors' umbrellas with accessories.

Other equipment such as ranging rods, survey pegs, light and heavy hammers, nails, chords, etc. required for setting out the Works, testing, inspection and any attendances shall be provided as and when required by the Engineer.

The above-mentioned equipment shall be the property of the Contractor upon the completion of the Contract.

1.2.7 Safety Equipment

The Contractor shall provide the Engineer with the safety equipment set as required in project office. The Contractor shall replace each item after it wears out and becomes unsuitable for use.

1.2.8 Testing of Material and Workmanship

Testing of material and workmanship which may be required upon instruction of the Engineer for the quality control of the Works shall be carried out by the Contractor at his own laboratory or laboratories acceptable to the Engineer. The Contractor shall be responsible for sampling, curing, and transport to laboratory for testing of materials and workmanship.

1.2.9 Measurement and Payment

No separate measurements and/or payment shall be made for all materials and works required under this Clause (1.2). All the cost associated with this Clause is deemed to be included in the item rates of the Bill of Quantities.

1.3 Access to and Possession of Site

The leaves, right-of-way, easement, and access to the site shall be governed by the rules of the country and by-laws of the local government.

1.3.1 The Site

The Site is:

a) That land purchased for the construction of water treatment plant, reservoirs, office buildings and other civil structures by the WUSC.
b) That land along pipeline alignments which are within the right-of-way of road.
c) That land under the ownership of WUSC or Nepal Government
d) As presented in the drawings.

Final Possession of the Site, or Parts thereof, for the purpose of carrying out the execution of the works to be given by the employer pursuant to Clause 2.1 of the Conditions of Contract shall be subject to any restrictions mentioned in the Contract.

The Contractor shall himself obtain temporary wayleaves on whatever additional lands or working easements are required by him to carry out the works.

Government of Nepal
Ministry of Urban Development
Department of Water Supply and Sewerage Management
Water Supply and Sewerage Management Office
Butwal, Rupandehi

Office Chief

1.3.2 Temporary Wayleaves and Access

The Contractor shall be responsible for obtaining temporary wayleaves.

The cost of obtaining wayleaves, including crop compensation, for temporary working areas, additional working easement and for any additional areas, required by the Contractor in connection with the Works as well as for the access to all of these shall be borne by the Contractor himself. The Contractor shall arrange for the serving of any Statutory Notices as per Clause 1.6 in connection with any temporary working area and shall give to the occupier of each such area seven day notice of his intention to enter and shall ensure that his methods of working cause the minimum of disturbance to the land and to its owners and occupiers.

The Contractor shall at all times provide proper facilities for access and inspection of the Works by the Engineer, his assistants, inspectors, agents and representatives of public agencies having jurisdiction.

The extent of each temporary working area and the period of time for its occupation shall be such as the Engineer considers necessary having regard to the Contractor's reasonable requirements which shall be submitted together with the Work Program to the Engineer.

The Contractor shall reinstate any temporary working areas to the condition prevailing prior to his initial entry as soon as possible after the work in those areas has been completed so as to keep the period of occupation to a minimum. The Contractor shall in any event restore the areas to a tidy and workmanlike condition. Boundary walls, fences and other structures that have been damaged, removed or otherwise interfered with by the Contractor shall be restored to a condition at least equivalent to their original condition.

1.3.3 Access to Adjoining Property

If the Contractor's work will cause unavoidable interference with access to adjoining property, the Contractor shall first give 7 days' notice to the occupier of such property and shall provide temporary means of access for vehicles, animals and pedestrians.

Convenient access to driveways, houses and buildings adjoining the work shall be maintained and temporary approaches to intersecting streets and alleys shall be provided and kept in good condition by the Contractor.

As soon as a section of surfacing, pavement, or a structure has been completed, it shall be opened for use by traffic at the request of the Engineer.

The Contractor shall not prevent the free access to public water valves, water hydrants, or utility valves.

1.3.4 Permanent Right-of-Way

The Employer will make all statutory arrangements necessary for obtaining the final possession of the Site and the permanent right-of-way in the shortest possible time.

1.3.5 Measurement and Payment

No separate measurements and/or payment shall be made for all materials and works required under this Clause (1.3). All the cost associated with this Clause is deemed to be included in the item rates of the Bill of Quantities.

1.4 Provision and Maintenance of Site Installations

1.4.1 Camp for Contractor's Staff

The Contractor shall provide adequate temporary accommodation with all necessary amenities and facilities for his staff and labor. The location and type of accommodation whether pre-fabricated or in-situ buildings or rental is the Contractor's choice.

During the whole period of existence, from setting up through operation to final removal upon completion of the Works, the Contractor shall be fully responsible for constantly carrying out all measures necessary for safeguarding the natural environment affected by his camp or camps.

He shall cause the least possible interference with existing amenities, whether man-made or natural. No trees shall be felled except as authorized by the Engineer

Latrine and ablution facilities and first-aid services shall be provided in sufficient type and numbers to the satisfaction of the Engineer and shall be maintained in a clean and sanitary condition at all times.

On completion of the Works or as soon as the facilities provided by the Contractor are no longer required, the Contractor shall remove such facilities and clear away all surface indications of their presence. Each camp area shall be reinstated to the satisfaction of the Engineer.

Government of Nepal
Ministry of Infrastructure Development
Department of Water Supply and Sewerage Management
Butwal Sub-Management Office

Office Chief

1.4.2 Contractor's Offices, Stores and Services

The Contractor shall provide, erect, construct, maintain, and subsequently remove proper offices, stores, workshops, laboratories, storage, and parking areas for his own use. Such facilities shall be sufficiently sized and equipped to enable him to manage his operations and those of his Subcontractors in a professional manner and to enable him to carry out all his obligations under the Contract.

Sheds for storage of materials that may deteriorate or corrode if exposed to the weather shall be weatherproof, adequately ventilated and provided with raised floors. No material or equipment shall be placed directly on the ground.

Within his offices, a meeting room shall be available for site meetings with the Engineer and the Employer.

These Contractor's facilities shall be subject to the same stipulations regarding sitting, interference with amenities and environmental protection as the Contractor's camp.

1.4.3 Preparation of the temporary Stockyard in the Site of Sub-project

The preparation of the stockyard for pipes valves and fittings shall include:

a) Clearance of the Site
b) Construction of side drains around the stockyards to avoid water logging
c) Construction of access tracks
d) Covering of pipe and fittings storage areas with a 150mm thick layer of granular material that will discourage the growth of vegetation
e) Provisions to carry the loads from the pipes and fittings.
f) Erection of a security fence
g) Construction of a guard house / store keepers office
h) Erection of stores for jointing material etc. including the provision of air-conditioning where necessary

1.4.4 Contractor's Construction Equipment

When working in built-up areas, the Contractor shall provide and use suitable and effective silencing devices for pneumatic tools and other Equipment that would otherwise cause a noise level exceeding 85 dB (A) during drilling, excavation and other work. Alternatively, he shall, by means of barriers, effectively isolate the source of any such noise in order to comply with above requirement.

1.4.5 Water Supply

The Contractor shall make his own arrangements for the supply of water for his camp, office and other temporary buildings as well as for the execution of the Works.

Temporary water connection may be arranged with nearby local system if any exist, at established rates.

When using other sources of water such as stone spouts, etc. the Contractor shall have due regard to and coordinate with other users, particularly with the local communities.

Water for drinking purposes shall be of drinking water quality, and shall be tested for proper disinfection.

1.4.6 Sanitation

The Contractor shall maintain the Site and all working areas in a hygienic condition. In all matters of health and sanitation he shall comply with the requirements of the local Health or other competent authority.

1.4.7 Sewage and Waste Disposal

The Contractor shall make provision for the discharge or disposal of from his camp, offices, and the Works of all wastewater as well as of all liquid and solid waste products however arising. The methods of disposal shall be to the satisfaction of the Engineer and of any authority or person having an interest in any land or watercourse over or in which water and waste products may be so discharged, and shall not in any manner be disposed of untreated to the environment.

1.4.8 Energy Supply

The Contractor shall install, operate, maintain and subsequently remove temporary supplies of electricity for power, heating, cooling, lighting and ventilation of all camps, offices, stores, laboratories and other temporary buildings used by the Contractor in addition to all electricity requirements in connection with the construction, testing and Defects Correction of the Works.

The Contractor shall ensure that all proposed electrical installations comply with the requirements of the Nepal Electricity Authority and shall be responsible for and shall bear all costs associated with obtaining the written approval of that authority for such installations and their operation.

Prior to placing orders for transformers, conductors, cables and associated equipment, the Contractor shall ensure by enquiry with the Nepal Electricity Authority that his proposed equipment is suitable for use with the existing or proposed medium/high tension electricity supply lines.

Office Chief

1.4.9 Pollution

The Contractor shall take all reasonable measures to minimize any dust nuisance, sound pollution, pollution of streams and inconvenience to or interference with the public (or others) as a result of the execution of the Works.

1.4.10 Supply of Fuel, Lubricants, etc.

The Contractor shall be responsible for arranging and ensuring that adequate supplies of petrol, diesel oil, motor oil, kerosene, lubricants and other petroleum products are available at all times to meet his requirements for the purpose of or in connection with the Contract; the Contractor's particular attention is drawn to this requirements as from time to time shortages and interruptions in the supply of fuel oils, etc., may occur.

The Contractor is required to store fuel to cover a minimum of 30 days of its requirements. It should provide additional stored fuel if supply conditions require so.

The Contractor is not allowed to purchase and use firewood.

With regard to the transportation, storage and handling of all his fuel requirements, including all electrical connections, he must strictly comply with all relevant safety codes and regulations.

Particular care is to be taken to avoid pollution due to spillage of fuel and oils. They shall be stored within a bunded area, all equipment drive by diesel or petrol engines shall be installed on a drip tray, waste oils shall be disposed of in a proper manner.

1.4.11 Temporary Telephone and Internet Connections

The Contractor shall arrange at his own cost for temporary telephone and internet connections to his offices and other installations.

He shall be responsible for all installations, connection and disconnection charges for his and his Representative's offices.

1.4.12 First Aid

The Contractor shall make his own arrangements for treatment of casualties on the Site. First-aid kits or units shall be provided. The Contractor shall be responsible for the construction of such first-aid units and their management and operation and rapid removal by ambulance of injured or sick employees to nearby hospitals. The first-aid service shall cover the Contractor's own personnel as well as that of the Employer, the Engineer, and all Subcontractors while working on the Site.

1.4.13 Fire Protection

No naked fire shall be used by the Contractor on or about the Site without the permission of the Engineer in writing. If in the Engineer's opinion the use of naked fire may cause a fire hazard, the Contractor shall at no extra cost to the Employer take such additional precautions and provide such additional firefighting equipment as the Engineer considers necessary.

The term "naked fire" shall be deemed to include electric arcs and oxyacetylene or other flames used in welding or cutting metals.

Compliance with the requirements of the Engineer shall not relieve the Contractor of any of his obligations under the Contract.

1.4.14 Contractor's Canteen

The Contractor shall provide adequate eating facilities for his employees and workmen.

1.4.15 Testing Facilities, Laboratory

The Contractor shall use an approved material testing laboratory for testing required by these specifications at his cost. An on-site laboratory staffed by qualified personnel may also be provided and used if allowed by the Engineer.

The name and qualifications of independent testing laboratories shall be submitted to Engineer for approval no less than thirty calendar days prior to the date the laboratories are to be used. Once approved, dismissal and replacement of the approved independent testing laboratory shall require written authorization by the Engineer.

The Contractor shall be responsible for the sampling, curing, and transport to the laboratories of all materials for testing, and all testing costs including laboratory fees, and/or all costs in running the on-site laboratory, i.e., chemicals, reagents, and other test consumables, staff, and utilities.

Government of Nepal
Ministry of Infrastructure Development
Department of Water Supply and Sewerage Management Office
Water Supply and Sewerage Management Office
Surkhet, Sudoorpaschim

Office Chief

1.4.16 Site Safety

The Contractor shall at all times in the conduct of his work and that of his Subcontractors adhere to the established rules and regulations concerning all safety matters at Site such as the recommendations contained in the "Manual of Accident Prevention in Construction", published by the Associated General Contractors of America, Inc., or other internationally recognized recommendations to the extent that such provisions do not conflict with the applicable laws. This is especially important wherever it is necessary to enable the free passage of the public through the Site.

The Contractor's Safety Officer shall have the qualification and the authority to issue instructions to the Contractor's personnel regarding protection measures to prevent accidents.

The Contractor shall provide the public with adequate information on all risks with respect to the construction works. If the general public sustains any kind of bodily injury or death, the Contractor shall be responsible for providing all necessary medical care and compensation.

During construction the Contractor shall erect, maintain and subsequently remove sufficient barricades, guards, lighting, sheeting, shoring, temporary sidewalks and bridges, danger signals as well as temporary covering of potential accident areas.

If and where required the Contractor shall erect and maintain suitable and approved temporary fencing, to BS 1722 Part 1 Type PLC 180A or better, to enclose such areas of construction and areas of land occupied by the Contractor within the Site as may be necessary to implement his obligations under the Contract. Where temporary fencing has to be erected alongside a public road, foot-path, etc., it shall be of the type required by and shall be erected to the satisfaction of the authority concerned.

All open excavations along pipe lines shall be protected sufficiently to keep out livestock, and ensure the safety of workmen and members of the public and be in accordance with the directives of the police and the other local regulations.

The Contractor shall be responsible for ensuring that all persons working in the vicinity of power lines are aware of the relatively large distance that high voltage electricity can "short" to earth when cranes or other large masses of steel are in the vicinity of power lines.

Where work is to be carried out in the proximity of buildings, bridges, tanks or other structures, the Contractor shall take all necessary precautions, including shoring and strutting, where necessary, to ensure the safety of the structures that are at risk.

The Contractor shall be responsible for all damages or injury which may be caused on any property by trespass by the Contractor's or his Subcontractor's employees in the course of their employment, whether the said trespass was committed with or without the consent or knowledge of the Contractor.

1.4.17 Protection of Overhead and Underground Services

The Contractor will be held responsible for any damage to known services (i.e. overhead services that are visible within the Site and underground services shown on the drawings) and he shall take all necessary measures to protect them. All work or protective measures shall be subject to approval of the Engineer. In the event of a service being damaged he shall inform the Engineer and the authority concerned, the Contractor shall not repair any such service unless instructed to do so.

Where no underground services are shown on the drawings or scheduled but the possibility of their presence can reasonably be inferred, the Contractor shall, in collaboration with the Engineer, ascertain whether any such services exist within the relevant section of the Site. The Contractor shall complete such an investigation well in advance of the start of construction work in the said section and he shall submit a report in good time to enable the Engineer to make whatever arrangements are necessary for the protection, removal or diversion of the services before any construction activities commences.

As soon as any underground service not shown on the drawings is discovered, it shall be deemed to be a known service and the Contractor will be held responsible for any subsequent damage to it. If such a service is damaged during the course of its discovery, the cost of making good such damage will be met by the Employer unless he establishes that the Contractor did not exercise reasonable diligence and that the damage was avoidable.

Where the authority concerned elects to carry out on its own account any alterations or protective measures, the Contractor shall co-operate with and allow such authority reasonable access and sufficient space and time to carry out the required work.

1.4.18 Signboards

Signboards shall be as per drawing. The signboards shall be placed at the project office and at main highway of the project town of the Contract, in English and Nepali, at least following information should be mentioned in each signboard:

(i) The name of the Project and section no.

(ii) The names and addresses of the Employer, the Contractor and the Engineer with contact number.

(iii) the name and short description of the Project

(iv) the amount of the Contract Price

(v) the starting and completion dates

They shall be of durable construction capable of withstanding the effects of the climate until the end of the Defects Liability Period.

The Contractor shall keep the signboards in good repair for the duration of the contract and shall remove them on completion of the Contract.

Besides these signboards the Contractor shall not, except with the written authority of the Engineer, exhibit or permit to be exhibited on the Site any other form of advertisement.

1.4.19 Site Roads, Loading and Turning Areas

The Contractor shall provide and maintain such access to the various sections of the Works as he requires for the proper execution of the work. Existing roads and bridges shall be upgraded for the construction transport purposes and site roads, loading and turning areas shall be so arranged as to minimize inconvenience to adjoining landowners or occupants and to the general public. The site roads shall be of gravel or equivalent material providing a hard surface for vehicles. Temporary roads, loading and turning areas shall be removed when they are no longer required and the location reinstated to the satisfaction of the Engineer, and damage to existing roads or bridges shall be repaired and reinstated to the satisfaction of the Engineer.

1.4.20 Site Drainage

The Contractor shall keep each Section of the Works well drained until the Engineer certifies that it is substantially complete and shall ensure that, so far as is practicable, all work is carried out in the dry. Site areas shall be kept well drained and free from standing water except where this is impracticable having regard to methods of Temporary Works properly adopted by the Contractor.

The Contractor shall provide, operate and maintain in sufficient quantity such pumping equipment, well points, pipes and other equipment as may be necessary to minimize damage, inconvenience and interference and shall construct, operate and maintain all temporary coffer-dams, sumps, ditches, drains and other temporary works as may be necessary to remove water from the Site while construction is in progress. Such Temporary Works and construction equipment shall not be removed without the approval of the Engineer.

Notwithstanding any approval by the Engineer of the Contractor's arrangements for the removal of water, the Contractor shall be responsible for the sufficiency thereof and for keeping the Works safe at all times and for making good at his own expense any damage to the Works.

The Contractor shall be responsible to keep the Site clear of water at whatever pump rate is found necessary.

The Contractor's site drainage facilities shall not cause pollution in any local watercourses, he shall be responsible for any legal action resulting from pollution events.

1.4.21 Cleaning-up of Site

Before application is made for the Employer to accept any substantially completed Section of the Works, all items shall be complete, ready to operate and in a clean condition. All trash, debris, unused building materials and temporary facilities shall have been removed from the Site. Tools and construction equipment not needed during the subsequent Defects Liability Period for repair and adjustment shall not remain on the Site. The temporary walkways, parking areas and roadways shall be completely swept and broomed.

1.4.22 Measurement and Payment

No separate measurements and/or payment shall be made for all materials and works required under this Clause (1.4). All the cost associated with this Clause is deemed to be included in the item rates of the Bill of Quantities.

1.5 Provision of Temporary Facilities

1.5.1 Temporary Diversions of Utilities

If in the opinion of the Contractor it is necessary to make temporary diversions of services in connection with the Works, the Contractor shall arrange with the relevant authority for the construction of diversions.

The Contractor may at his own cost and subject to the approval of the authority concerned, make such temporary diversions as may facilitate the carrying out of the Works. These temporary diversions shall be reinstated to the full satisfaction of the Engineer and the relevant authority on completion of the Works.

Government of Nepal
Ministry of Infrastructure Development
Department of Water Supply and Sewerage Management
Water Supply and Sewerage Management Office
Butwal, Rupandehi

Office Chief

1.5.2 Detours and Traffic Control

The Contractor shall program his work in such a way that, wherever the temporary closure of street sections to public thoroughfare cannot be avoided, the duration of traffic diversion can be kept as short as possible. No streets shall be closed and no detours shall be introduced and no traffic diverted until the Contractor's proposals have been approved by the Engineer and the appropriate Government authorities, such as the Roads Department.

Where work is to be carried out in public roads, the Contractor shall give notice to the Engineer sufficiently in advance of the date on which he wishes to commence such work.

The Contractor shall be responsible for obtaining the permission of the Engineer, Road Department and the Police for activities he intends to carry out in public roads. Two copies of the Contractor's proposals to the relevant authorities shall be submitted to the Engineer. One copy of all obtained approvals shall be submitted to the Engineer.

The Contractor's attention is drawn to the fact that processing of the documentation required by the local authorities prior to the cutting of existing public roads takes approximately 30 days. During the Monsoon period (June to August) no road cuttings are normally allowed.

Detours shall be selected in such a way that the inconvenience to the affected traffic as well as to the inhabitants of the affected areas is kept to a minimum.

The Contractor shall furnish, install and maintain at all times during the execution of the Works all necessary traffic signs, barricades, lights, signals and other traffic control devices, including flagging and other means of guiding traffic through the work zone. Traffic control shall be managed in accordance with prevailing rules and regulations, and with the approval and to the satisfaction of the Engineer.

All devices mentioned above shall be in conformity with the requirements of the Roads Department. All traffic signs and control devices to be furnished and installed by the Contractor shall be approved by the Engineer for their location, position, visibility, adequacy and manner of use under specific job conditions.

All traffic control devices necessary for the initial stage of construction shall be properly placed and operational before any construction is allowed to start. When work of a progressive nature is involved, the necessary signs shall be moved concurrently where they are needed.

If the Engineer determines that proper provisions for safe traffic control are not being provided or maintained, he may restrict construction operations affected by such defective signs or devices until such provisions are established or maintained, or may altogether order suspension of the Work until a proper traffic control is achieved. In case of serious or willful disregard by the Contractor of the safety of the public or his employees, the Engineer may take necessary steps to rectify the situation and deduct the cost thereof from monies due or becoming due to the Contractor. The Contractor shall be responsible for all resulting delays.

The Contractor shall designate or otherwise employ personnel to furnish continuous surveillance of the traffic control operations. The designated personnel shall be available day and night to respond to calls involving damage due to vandalism or traffic accidents.

At sections where traffic is in operation and when ordered by the Engineer, the movements of the Contractor's equipment from one place of work to another shall be subject to traffic control. During rush hours movement of larger vehicles, such as trucks, cranes, dumpers, etc. through main thoroughfare are not permitted by the police. Spillage resulting from hauling operations along or across the road way shall be removed immediately at the Contractor's expense.

The cost of detours and traffic control is deemed to be included in the rates for road reinstatement

1.5.3 Provision of Temporary Services

When the execution of the Works requires the temporary disconnection of existing public utilities, the Contractor shall provide the affected users with temporary services in at least the same standard as the original services.

For water supply he may install temporary lines or arrange for regular supply by tankers. The amount of water to be provided for the interruption period for a specific area shall be assessed by the Contractor. The Contractor shall submit to the Engineer, for its approval, the recommended volume of water to be provided.

When forced to disconnect existing sewers the Contractor shall install temporary pipes of adequate size to carry off sewage from any private sewer facilities cut off by construction work. Connections to temporary pipes shall be made immediately by the Contractor upon cutting off the existing facility. No sewage shall be allowed to flow from any severed facility upon the ground surface or into the trench excavation. Pipes used in temporary sewers may be plastic or approved flexible material.

When the Contractor is forced to disconnect power or telephone connections the relevant authority shall provide temporary connections at the Contractors expense.

Upon completion of work the Contractor shall replace all severed connections, with the assistance of the concerned authority where necessary, and restore to operating order the existing facilities.

No valve or other controls in public service facilities shall be operated by the Contractor without approval of the Engineer and the relevant authorities. All users affected by such operation shall be notified by the Contractor at least one hour before the operation and advised of the probable time when service will be restored.

1.5.4 Protection of Adjoining Property

1.5.4.1 Land

The Contractor shall control the movement of his crews and equipment on the working easement including access routes approved by the Engineer so as to minimize damage to crops and property and shall endeavor to avoid marring the lands. Ruts and scars shall be obliterated and damage to land shall be corrected and the land shall be restored as closely as possible to its original conditions before final taking-over of the Works.

The Contractor shall be responsible directly to the tenant / land owner for any excessive or avoidable damage to crops or lands resulting from his operations whether on lands adjacent to right-of-way or on approved access road and deductions will be made from payment due to the Contractor to cover the amount of such excessive or avoidable damage if adequate compensation is not paid by the Contractor, in the opinion of the Engineer.

1.5.4.2 Buildings and other Structures

The Contractor shall be responsible and take all measures in order to protect adjoining property including buildings, electrical and telephone poles, bridges and culverts, retaining walls, compound walls and fences, and other structures. Prior to the commencement of the activities, the Contractor shall assess the probability and extent of unavoidable damages, if any, to the building and properties and submit his assessment to the Engineer. The Engineer may make his own opinion and if required may order arrangements for protection or repair of such likely unavoidable damage in which event the Contractor shall complete the activities.

1.5.5 Reinstatement upon Completion

Temporary facilities shall be provided by the Contractor, only for as long as required after which he shall dismantle and remove the same from their place of use as speedily as possible. Re-usable components shall be safely stored by the Contractor in his yard.

The place of use shall be cleared and reinstated immediately to at least the condition existing before the temporary facilities were provided, and to the satisfaction of the Engineer.

1.5.6 Measurement and Payment

All temporary diversions of utilities and temporary services required for execution of the works shall be deemed to be included in other items of the BOQ and shall not be separately paid.

1.6 Coordination with Other Authorities

1.6.1 Statutory Services

As far as possible the Contractor shall acquaint himself with the actual location of all existing public utilities such as sewers, water mains, drains, cables for electricity, telephone lines, lighting poles, masts, etc., before commencing any activities likely to affect the existing utilities. The Contractor shall with the assistance of the Employer obtain such information directly from the responsible authorities as early as possible.

1.6.2 Notices, Permits

Well in advance of the programmed start of any work which may affect traffic or any existing utilities the Contractor shall give advance notice to the respective authority indicating the type, the exact location, the programmed starting time and the expected duration of the activities and shall provide whatever particulars may be required by the authorities to issue any required permits and make all necessary arrangements. The Employer will provide whatever assistance possible to the Contractor to facilitate the permit procedure which, however, will remain the sole responsibility of the Contractor.

1.6.3 Witnessing and Post-Construction Clearances

It is expected that the issue of these permits will be tied to the requirement that the work may only be carried out in the presence of authorized inspectors from the authorities concerned. Their job will be to witness and assess any damage or interference with their respective utility. Should such disturbances occur it will be at their discretion to authorize either the Contractor to correct them or to arrange for specialized repairs through their own personnel.

The Contractor shall be fully responsible for all costs whatever resulting from avoidable damages of or interference with other utilities.

As proof that the activities in question have been completed to the satisfaction of the authorities concerned the Contractor shall submit to the Engineer upon request official post-construction clearances issued by the respective authorities.

Office Chief

1.6.4 Measurement and Payment

No separate measurements and/or payment shall be made for all materials and works required under this Clause (Clause 1.6). All the cost associated with this clause is deemed to be included in the item rates of the Bill of Quantities.

1.7 Submissions by the Contractor

1.7.1 Pre-Construction Surveys and Setting Out

The Contractor shall verify all measurements and be responsible for their correctness. Any differences which may be found between actual measurements and the dimensions given in the Contract Documents shall be submitted to the Engineer, in writing, for consideration and directives before proceeding with the Works.

Site bench marks shall be accurately and safely established, maintained and removed upon completion of the Works, all to the satisfaction of the Engineer. The Engineer will indicate the position, co-ordinates and elevation of bench marks near the works, as shown on the Drawings.

The Contractor shall prepare a plan detailing the location of the bench marks and keep this up-to-date throughout the period of the Contract. Reproducible copies of the plan so prepared shall be supplied to the Engineer, as and when he may require.

The Engineer reserves the right to order levels, considered necessary for the full and proper supervision and measurement of the works, to be taken at any time.

Before the Works, or any part thereof, are commenced, the Contractor and the Engineer shall together make a complete survey, and take levels, of the Site and agree on the dimensions and elevations upon which setting out of the Works shall be based.

These levels shall be related to the bench marks and shall be plotted and drawn up by the Contractor. After agreement of the drawings, which shall be signed by the Engineer and the Contractor, these levels shall form the basis of setting out of the Works.
The Contractor shall submit the original of the drawings, and three copies, to the Engineer.

The Contractor shall be responsible for the true and proper setting out of the Works in relation to reference data given on the Drawings and shall accurately set out the positions, levels and dimensions of all parts of the Works. Any delay or loss resulting from errors in the setting out of the Works shall be the responsibility of the Contractor.

Setting out shall be reviewed by the Engineer before commencing the Works, but any approval shall, in no way, relieve the Contractor of his responsibility for the correct execution of the Work.

Setting out of the Works shall use methods and the necessary instruments described in BS 5606 "Code of Practice for Accuracy in Building". The Contractor shall maintain, in good working order at all times, the instruments provided by him for the setting out of the Works and shall make such instruments available to the Engineer as instructed for checking or taking measurements.

The Contractor shall provide all assistance which the Engineer may require for taking measurements of the Works, including labor, equipment and transportation.

1.7.2 Detailed Design of Temporary Works

The Contractor shall submit for approval full particulars, including drawings of any of the site installations and Temporary Works. If required the Contractor shall also submit calculations of the stresses, strains and deflections which will arise in false work or other Temporary Works and these calculations shall be accompanied by detailed Working Drawings to show the Contractor's proposals. Approval by the Engineer of the Contractor's proposals, calculations or drawings shall not relieve the Contractor of any of his duties or responsibilities under the Contract.

1.7.3 Working Drawings

The Drawings prepared by the Engineer, are called Engineer's Drawings. They may be modified or added to as provided by the following clauses.

The proposals shown on the Engineer's Drawings are based on information available prior to preparation of the Bid Documents. All levels indicated or proposed are based on survey information previously available but will need to be revised subject to the results of survey and site investigation carried out by the Contractor. Nevertheless, the Contractor shall follow such proposals in preparing his own proposals consistent with his own experience.

Working Drawings shall be submitted by the Contractor to the Engineer. Working Drawings shall include, but not be restricted to, pipeline plans and profiles, reinforcement detail drawings and bending schedules, shop drawings for structural steel and miscellaneous metal work, and drawings for other work for which the Engineer's approval is required.

It shall be the Contractor's own responsibility to prepare such Working Drawings as he may require for the proper setting out and construction of all structures and facilities. Work shall not commence on an individual structure or facilities until the relevant Working Drawings have been approved by the Engineer.

Within 28 days of the date of the Letter of Acceptance, the Contractor shall submit to the Engineer a Drawings Submittal Schedule for the Working Drawings listing the anticipated dates upon which they will be submitted for approval by the Engineer. The submission dates shall be spaced at reasonable intervals to allow at least 21 days for the Engineer to duly check and to either approve them or to request changes or modifications, as the case may be.

All dimensions shall be in metric units and each drawing shall be properly identified by a drawing head and a numbering code in the form prescribed by the Engineer upon commencement of the Works. ISO or DIN standard size sheets shall be used.

Drawings shall be scaled at A1 size, and plotted at A1 size and A3 size.

Prior to submittal, the Contractor shall also check the drawings prepared by his Subcontractors for accuracy and completeness, especially that the relation to adjoining work is accurately shown.

The Contractor shall submit 3 (three) copies of all drawings for approval.

Any changes or modifications to the Working Drawings that the Engineer considers necessary shall be made by the Contractor promptly and the drawings resubmitted for approval.

Approval of Working Drawings will be given by the Engineer in the form of a stamp "RELEASED FOR CONSTRUCTION" together with the date and the authorized signature. Only those Working Drawings carrying the signed and dated stamp shall be used for execution.

Copies of all such approved Working Drawings together with one unreduced transparency shall be supplied to the Engineer by the Contractor immediately after approval. The cost of preparing and providing all Working Drawings shall be included in the Contract Rates.

Should it be found at any time after approval has been given by the Engineer to a Working Drawing submitted by the Contractor that the said Working Drawing does not comply with the terms and conditions of the Contract or that the details do not agree with the Working Drawings previously approved, such alterations and additions as may be deemed necessary by the Engineer shall be made therein by the Contractor and the work carried out accordingly without entitling the Contractor to extra payment on account thereof, except where such alternations and additions are to be made in direct consequence of written order by the Engineer to vary the Works.

No examination by the Engineer of any document submitted by the Contractor or of the Contractor's Working Drawings, nor the approval expressed by the Engineer in regard thereto, either with or without modification, shall absolve the Contractor from any liability imposed upon him by any provision of the Contract. Notwithstanding the Engineer's approval of the Working Drawings the Contractor shall be responsible for any dimensional or other errors.

1.7.4 As-Built Drawings and GIS Data Creation

1.7.4.1 As-Built Drawings

Such approved Working Drawings as have been selected by the Engineer shall be correctly modified for inclusion in the As-Built Drawings incorporating such variations to the Works as have been ordered and executed. Such drawings shall show the actual arrangement of all structures and items of equipment installed under the Contract. The Contractor shall submit 1 (one) reproducible copy and 3 (three) prints of all As-Built Drawings clearly named as such to the Engineer for approval before applying for the Taking-Over Certificate for the respective Section of the Works.

In the as built drawings, for the major structures, the GPS control points should be always enlisted in the drawings. GPS format should be in MUTM projection (84 or 87) or WGS84 format (lat, lon).

After approval of the As Built Drawing the Contractor shall supply an electronic copy of the drawing in together with a licensed copy of the drafting software (at least AUTOCAD 2007). The software shall become the property of the Employer and shall be used to view the As Built Drawings.

During the course of the Works, the Contractor shall maintain a fully detailed record of all changes from the approval to facilitate easy and accurate preparation of the As-Built Drawing.

Irrespective of the other contractual prerequisites no Section of the Works will be considered substantially completed until the respective As-Built Drawings have been approved by the Engineer.

1.7.4.2 GIS Data Creation

In parallel with the preparation of as-built drawings, the Contractor shall produce GIS data of the constructed works. The

contractor conduct all necessary survey work, and shall ensure that vertical and horizontal measurements shall be captured at an accuracy of +/- 0.1m at a 95% confidence level, using the most suitable and cost-effective field data collection technology and methodology. All horizontal and vertical survey measurements will be referenced to the present GIS georeference based on MUTM projection with relevant meridian (84 or 87).

In case of pipe line or any linear installation or construction stretching more than 100 m, the Contractor will survey the three-dimensional position (x,y,z) of all point and line assets constructed under this project, (e.g., pipelines, approach road, longer span bridge crossing, etc.). In case of point installation or construction, the Contractor will survey the three-dimensional position (x,y,z) of all point assets constructed under this project, (e.g., small bridge crossings, manholes, chambers, valves, meters, hydrants, plugs, reducers, and tees). Nodes shall be created to clearly delineate different pipe sections in terms of material and/or diameter and to allow for future development of a hydraulic model in the GIS platform. Nodes shall also require a three-dimensional position, and through this, the position of the ends of a pipeline segment shall be defined. Point and line data should be consistent with the attributes of the existing GIS system, if any. However, the Engineer and the Employer may require the Contractor, at no additional cost, to create new attributes to include non-survey data, e.g., valve model, name of the manufacturer, images or plans, etc. Prior to the field survey, the Contractor shall submit to the Engineer, for approval, the GIS design in terms of themes, feature types and attributes.

The Contractor shall develop a checklist of QC checks for each type of deliverable and will be responsible for ensuring that these QC checks are performed. The Contractor shall assign a GIS quality officer to manage the quality review process. This officer shall be independent of the capture and production teams.

GIS data for the project will be delivered in an ESRI ArcGIS compliant file geo-database.

1.7.5 Construction Programme and Progress of Works

1.7.5.1 Construction Programme

In amplification of the requirements of the Conditions of Contract, the program shall be in the form of a Critical Path Method (CPM) Diagram showing, sequences, dependencies, durations and dates for execution of all major items following the sub-divisions in the Bills of Quantities for the execution of the Works within the periods stated in the Contract. It shall be supported by:

a) Data of the construction methods
b) Equipment Utilization Schedule
c) Manpower Utilization Schedule
d) Subcontracting Schedule
e) Mobilization/Demobilization Schedule

The CPM diagram incorporating the above mentioned schedules shall be prepared using Microsoft Project, or similar approved project management software, and shall be presented in hard copy and electronic form to the Engineer.

In carrying out the Works due attention shall be paid to all measures which can reasonably be taken in order to diminish the inconvenience which the work may cause to services and access to property.

1.7.5.2 Updating, Monitoring and Progress Reporting

The Contractor shall monitor the progress of the Works including information provided by his Sub-contractors and suppliers, as necessary, for purpose of network planning, scheduling and updating and shall confirm the actual progress on each current activity shown on applicable CPM networks. The CPM networks shall form part of the Monthly Progress Report and shall indicate changes of schedule, if any in network activity duration and start/finish imposed dates. It shall also be provided in electronic form.

The Contractor shall prepare written explanatory notes on the particular activities which are overrunning or going to overrun against the Master Schedule. If any such overrunning work is on the critical path, the Contractor shall state what corrective actions will be taken by him to bring it back on the schedule.

1.7.5.3 Detailed Fortnightly Programme

The contractor shall submit at the end of each working week a detailed bar chart program for the next fortnight. The program shall identify where further drawings or instructions are to be issued by the Engineer to avoid disruption to the progress of the Works.

1.7.5.4 Progress Reports

The Contractor shall furnish the Engineer with 5 copies of Progress Reports at regular monthly intervals in a form agreed with the Engineer, containing the following information:

a) Physical progress for the report month and estimated progress for the next month;
b) CPM networks and explanatory notices as described in Clause 1.7.5.2;
c) Updated S-curves for physical progress at different sections of the Works

Office Chief

d) Progress on Quality Control and Quality testing Plan

e) List of activities and obligations completed and planned for next month

f) Any report which may be specifically requested by the Employer and/or the Engineer.

These monthly progress reports shall be submitted not later than 7 days after the end of the reporting month.

1.7.6 Operation and Maintenance Manual

The contractor will submit an operation and maintenance manual, providing details of all the plant /mechanical facilities (valves, meters, etc.) he supplies and give details of recommended maintenance intervals and procedures.

1.7.7 Record / Progress Photographs

The Contractor shall arrange each month at least 12 Nos. of photographs to be taken by a professional photographer as Record Photographs and shall provide the electronic files and 6 color prints each on glossy paper unmounted and of a size not less than 210 mm x 297 mm (A4) in transparent plastic pockets contained in hard cover album. Each print shall contain upon its back the date and description of the view taken. The Contractor shall ensure that no use is made of any negative or print without permission from the Employer.

Out of these Record Photographs the Contractor shall select 6 characteristic ones as Progress Photographs, copies shall be made of these to be attached to the Progress Reports.

1.7.8 Measurement and Payment

Unless otherwise provided in the BoQ, no separate measurements and/or payment shall be made for all materials and works required under this Clause (Clause 1.7). All the cost associated under this clause is deemed to be included in the item rates of the Bill of Quantities.

1.8 Quality Control

1.8.1 Quality Control Plan and Procedures

The Contractor shall be responsible for establishing and maintaining procedures for quality control that will ensure that all aspects of the Works comply with the requirements of the Contract.

As soon as reasonably practicable prior to the commencement of Works the Contractor shall submit for approval a Quality Control Plan giving detailed proposals for control of quality of all aspects of work on the Site and at suppliers' workshops.

The Quality Control Plan shall include the following:

a) a list of the Contractor's staff engaged in quality control

b) a list of any outside testing agencies employed by the Contractor for work in connection with quality control

c) where a testing laboratory is to be established on Site under the Contract, a list of major items of equipment and a layout of the laboratory, together details of the tests which will be carried out there

d) a list of manufactured items and materials, obtained by the Contractor for the Works, which require inspection at the suppliers' premises, and the proposed procedures for ensuring quality control

e) a list of materials and operations to be inspected by the Contractor at the various stages of construction work on Site, together with inspection procedures, test types and frequencies

f) Sample of proposed quality control records, testing and reporting forms.

Unless the Engineer permits otherwise, the approved Quality Control Plan shall be followed throughout the construction of the Works. Any approval by the Engineer of the Contractor's plan and procedures shall not relieve the Contractor of his obligation to ensure that the Works comply with the requirements of the Contract.

The Contractor shall appoint a suitably qualified member of his staff to be responsible for all aspects of quality control and to maintain effective liaison with the Engineer.

Quality Assurance Plan (QAP) and third party inspection:

Before procurement of materials like SS pipes, DI pipes, DI fittings, CI Valves, submersible pumps, electrical panels, etc. Contractor shall have to submit manufacturer's Quality Assurance plan (QAP) for review and approval of Engineer. QAP shall contain the quality control measures and quality checks/reviews at various stages of material production and shall comply as per latest international standards/codes of practice.

Such approved QAP shall be followed by Third party inspecting agencies at factory premises. No relaxation in QAP shall be done and followed either by the contractor or TPI agency without amendment to approved QAP by engineer. All such third party inspections and test results to be submitted as TPI tests reports in neat booklet FORM. After procurement

Following QAP norms, Contractor shall submit such TPI test reports along with interim payment BILLS claiming supply of items. No materials will be accepted for payment without necessary third-party INSPECTION. No extra payment shall be made by Employer for third party inspection conducted by Contractor if not stated in the BOQ.

1.8.2 Sampling and Testing

The Contractor shall provide for the approval of the Engineer, samples of all construction materials and manufactured items required for the Permanent Works. All samples rejected by the Engineer shall be removed from Site. All approved samples shall be stored by the Contractor in a sample room, at a location approved by the Engineer, for the duration of the Contract, and any materials or manufactured items subsequently delivered to Site for incorporation in the Permanent Works shall be of a quality at least equal to the approved sample. The approved samples may only be disposed of with the Engineers approval.

Samples shall be submitted and tests carried out sufficiently early to enable further samples to be submitted and tested if required by the Engineer. Samples for testing will generally be selected by the Engineer from materials to be utilized in the project and all tests will be under the supervision of, and as directed by, and at such points as may be convenient to the Engineer.

Material requiring testing shall be furnished in sufficient time before intended use so as to allow for testing. No materials represented by tests may be used prior to receipt of written approval of said materials.

The Contractor shall give the Engineer at least 14 days' notice in writing of the date on which any of the materials will be ready for testing or inspection at the suppliers' premises or at a laboratory approved by the Engineer and unless the Engineer shall attend at the appointed place and time the test may proceed in his absence. The Contractor shall in any case submit to the Engineer within 7 (seven) days after every test such number of certified copies of the test readings as the Engineer may require.

Approval by the Engineer as to the placing of orders for materials or as to samples or tests shall not prejudice any of the Engineer's powers under the Contract.

The provisions of this Clause shall also apply to materials supplied under any nominated subcontract.

After all construction at each Section is completed and before applying for taking-over, the Contractor shall perform field tests as called for in the Specifications. The Contractor shall demonstrate to the Engineer the proper operation of the facilities and the satisfactory performance of the individual components. Any improper operation of the system or any improper or faulty construction shall be repaired or corrected to the satisfaction of the Engineer. The Contractor shall make such changes, adjustments or replacement of equipment as may be required to make the same comply with the Specifications, or replace any defective parts or materials.

In addition to any special provision made herein as to sampling and testing materials by particular methods, samples of materials and workmanship proposed to be employed in the execution of the Works may be called for at any time by the Engineer and these shall be furnished without delay by the Contractor at his own cost. Approved samples will be retained. The Engineer will be at liberty to reject all materials and workmanship that are not equal or better in quality and character than such approved samples.

The tests required for quality control shall include but not be limited to:

a) tests conducted at the premises of the Contractor, Subcontractor, manufacturer or supplier which are normally or customarily carried out at such premises for the items or materials being supplied for the Works

b) tests which are normally or customarily conducted on the items or materials being supplied for the Works by the Contractor, Subcontractor, supplier or manufacturer but which have to be conducted at an approved laboratory because the necessary testing facilities are not available on the premises of the Contractor, Sub-Contractor, supplier and manufacturer

c) tests on locally obtained materials or items either on the Site or at an approved laboratory for the purpose of obtaining the approval of the Engineer to the classification, use and compliance with the Specifications of such items or materials

d) routine quality control tests conducted by the Contractor to ensure compliance with the Specifications

e) regular testing of concrete and other materials as specified in the relevant Chapters of the Technical Specifications

f) Standard shop and Site acceptance tests, including trial assemblies, of Plant.

1.8.3 Inspection and Acceptance

The Engineer will not inspect any item of fabricated or finished work until such time as the Contractor shall have forwarded to the Engineer the approved Working Drawings covering the items to be inspected, together with four copies of the respective orders.

Manufactured items and materials delivered to the Site shall be inspected by the Contractor on arrival. Any defects shall be notified to the Engineer. Minor defects to surface finishes and the like in manufactured items shall be made good in an approved manner to the satisfaction of the Engineer. Items with more serious defects shall be returned to the Contractors for correction or replacement as appropriate.

1.8.4 Materials/Plant Certificates

Where certificates are required by the Specifications or relevant Reference Standard, the original and one copy of each such certificate shall be provided by the Contractor.

Certificates shall be clearly identified by serial or reference number and shall include information required by the relevant Reference Standard or Specification Clause.

The timing for submittal of certificates shall be as follows:

a) manufacturer's and Contractor's test certificates shall be submitted as soon as the tests have been completed and in any case not less than 7 calendar days prior to the time that the materials represented by such certificates are needed for incorporation into the Permanent Works

b) Certificates of tests carried out during the construction or on completion of parts of the Permanent Works shall be submitted within 7 days of the completion of the test.

No materials, articles or items of fabricated or finished work to be supplied by the Contractor or Subcontractors which have been inspected and tested by the Engineer or the inspecting Engineer shall be dispatched unless a Passing Certificate has been requested by the Contractor from the Engineer and subsequently been issued by the Engineer to the effect that the same are approved. Neither the Contractor nor Sub-Contractors shall make use of any materials or articles ordered by them for the purpose of fabrication until a Passing Certificate covering the said materials and articles shall have been issued by the Engineer or inspecting Engineer.

1.8.5 Site Records

Daily records of on-site testing and inspection shall be kept on forms of approved format. Test results shall be certified by the responsible member of the Contractor's staff. All test certificates and inspection records (including any from Contractors or other outside testing agencies) shall be clearly identified with the appropriate part of the Works to which they refer, and they shall be submitted to the Engineer together with the respective Passing Certificate.

Once each month, or at such other intervals as the Engineer may require, the Contractor shall submit in an approved form a summary of all quality control inspections and tests performed at Site and elsewhere in the intervening period.

Test results shall be summarized in tabular form or graphically or both in a way that best illustrates the trends, specific results, and specification requirements. Where the tests show that the specified requirements were not achieved, the report shall describe the action that was taken.

Each report shall also contain a forecast of quality control work likely to be carried out during the period to be covered by the succeeding report.

The Contractor shall keep detailed and up-to-date inventories in an approved form of goods and materials already approved by the Engineer for which Passing Certificates have been issued as well as of all other goods and materials subject to quality control which are on order, delivered, found faulty, lost during the work or found to be surplus to requirements. The Engineer shall have access to these records at all times.

1.8.6 Daily Logbook

The Contractor shall keep a Daily Logbook at each location where major construction activities are taking place. This Daily Logbook shall be in a form approved by the Engineer and shall contain, but not be limited to, the following major items of information:

a) Name of Contractor and Package No.

b) date

c) weather conditions (max./min. temperature, hours and intensity of rainfall, cloudy, sunny, windy)

d) work carried out during the day per Section (description, quantities)

e) major equipment used per section (on contractual work, on extra work ordered, approximate operating time on either)

f) strength of labour force per Section (on contractual work, on extra work ordered, hours worked on either)

g) Delays (cause, effects such as idle time etc.)

h) Unusual events (earthquakes, floods, fires, storms, accidents, strikes, agitation, rallies etc.)

i) visitors at Site

j) availability of required construction materials at site

Each daily log shall be signed by the responsible Site Manager of the Contractor and "noted" by the Engineer.

Government of Nepal Ministry of Urban Development Department of Water Supply and Sewerage Management Office Butwal, Rupandehi

Office Chief

1.8.7 Operation and Maintenance for 1 year

After the installation of the pumps and its successful commencement, the contractor should operate the plant for at least 1 year. The electrical cost of the pump operation and other electrical power consumption shall be recorded as per NEA format and should be reported in the log book.

Also for the disinfection of the treated water, the bleaching powder added should be reported in the logbook. The concentrations of the bleaching powder for chlorination is given in section 3.3.3.4.11.

This log book record of power consumption and chlorination will be used for the reimbursement for the contractor during first year of operation.

Personnel that should be employed for the one year maintenance of the system should be at least two assistant pump operator who will act as guard also for their pump station, one water supply and sanitation technician who will also act as plant operator and plumber for the system, and one general guard for the system.

Within a month after the start of the pipe laying works, the Contractor shall train the WUSC staff identified by the Employer who will be responsible for the operation and maintenance of the distribution system. The training shall include but not be limited to, cutting pipes of all diameters, installation of polyethylene sleeves, tape wrapping of pipes and fittings, repair of coatings, jointing of pipes of all diameters with all types of joint, including electro fusion joints, installation of valves and fittings and maintenance of valves and fittings.

Training shall be done for twelve (12) persons, and consist of at least 7 days of classroom-type training and a suitable period of field training to demonstrate and train the personnel of the Employer. The training personnel and program, and training materials shall be submitted prior for the approval of the Engineer.

1.8.8 Measurement and Payment

Unless otherwise provided in the BOQ, no separate measurements and/or payment shall be made for all materials and works required under this clause (Clause 1.8). All the cost associated under this clause is deemed to be included in the item rates of the Bill of Quantities.

1.9 Standards, Codes and Abbreviations

1.9.1 Reference Standards and Codes

The Works shall be carried out in accordance with the relevant quality standards, test procedures, or codes of practice, collectively referred to as Reference Standards, listed in the relevant parts of the Specifications. The applicable issue of any Reference Standard shall, unless otherwise stated in the Specification, be the issue current at the date two months preceding the date for submission of the Bids for the contract. The Contractor shall familiarize himself fully with the requirements of such standards. If no standard is indicated then the relevant ISO Standard or, in the absence of such standard, the relevant Indian Standards shall apply, or others, if so approved.

The Contractor shall obtain and keep on Site at least one copy of each approved Reference Standard and each Reference Standard referred to in the Specifications, and will make these accessible to the Engineer at any time upon request.

The Contractor shall obtain the Reference Standards from the addresses given below:

ISO	International Organization for STANDARDIZATION, Rue de Varembe, Geneva, Switzerland
DIN	Deutsche Industry Norm (German Industry Standard) from Deutsche Normenausschuss, Beuth-Vertrieb, P.O. Box 1045, W-1000, Berlin 30, Federal Republic of Germany
BSI	British Standards Institution, 389 Chiswick High Road, London W4 4BR, England
AASHTO	American Association of State Highway and Transportation Officials, Suite 341 National Press Building, Washington, D.C. 2004, U.S.A.
ACI	American Concrete Institute, P.O. Box 4754, Redford Station, Detroit, MI 48219, U.S.A.
AISC	American Institute of Steel Construction, 101 Park Avenue, New York, NY 10017, U.S.A.
ASTM	American Society for Testing and Materials, 2501 Race St., Philadelphia, PA 19103, U.S.A.
AWS	American Welding Society, Inc., 2501 N.W. 7th St., Miami, FL 33125, U.S.A.
AWWA	American Water Works Association, 6666 West Quincy Ave. Denver, Colorado 80235, U.S.A.
IS	Indian Standards, Manak Bhawan - 9, Bahadur Shah Jafar Marg, New Delhi, 11002
SIS	Swedish Standards
NS	Nepal Standards, Nepal Bureau of Standards and Metrology, Balaju, Kathmandu, Nepal

Government of Nepal
Ministry of Infrastructure Development
Department of Water Supply and Sewerage Management
Water Supply and Sewerage Management Office
Butwal, Rupandehi

Office Chief

1.9.2 Metric Units

S.I. units of measurement shall be used throughout the Contract. All information and data originating in another system shall be transferred by the Contractor into the S.I. system.

1.9.3 Abbreviations

ACI	=	American Concrete Institute
AC	=	asbestos cement, alternating current
AASHTO	=	American Association of State Highway and Transportation Officials
ASTM	=	American Society for Testing and Materials

Government of Nepal
Ministry of Infrastructure Development
Department of Water Supply and Sewerage Management Office
Butwal, Rupandehi

Office Chief

BOQ	=	Bill of Quantities, Schedule of Quantities
BS	=	British Standard
CBR	=	California Bearing Ratio
cm	=	centimeter
cm2/g	=	square centimeter per gram
CP	=	chromium plated
d	=	day(s)
dia	=	diameter
DIN	=	Deutsche Industry Norm (German Standard)
DN	=	diameter nominal (=ND)
GON	=	The Government of Nepal
g/cm3	=	gram per cubic centimeter
g/m2	=	gram per square meter
h	=	hour
ha	=	hectare
HDPE	=	high density polyethelene
GON	=	Government of Nepal
HP	=	horse power
IDA	=	International Development Association
IS	=	Indian Standard
ISO	=	International Standard Organization
kg	=	kilogram
kg/cm3	=	kilogram per cubic centimeter
kg/cm2	=	kilogram per square centimeter
km	=	kilometer
kN	=	kilo newton
kVA	=	kilo volt ampere
l	=	liter
m	=	meter
m2	=	square meter
m3	=	cubic meter
mg/l	=	milligram per liter
min	=	minute
mm	=	millimeter
m/min	=	meter per minute
m3/d	=	cubic meter per day
m3/min	=	cubic meter per minute
m/s	=	meter per second
mm/s	=	millimeter per second
N	=	Newton
ND	=	nominal diameter (=DN)
NEA	=	Nepal Electricity Authority
nm	=	nanometer
N/mm2	=	Newton per square millimeter
NS	=	Nepalese Standard
NWSC	=	Nepal Water Supply Corporation
OMC	=	Optimum moisture content
OPC	=	Ordinary Portland Cement

Government of Nepal
Ministry of Infrastructure Development
Department of Water Supply and Sewerage Management Office
Water Supply and Sewerage Management Office
Butwal, Rupandehi
Office Chief

Pa	=	Pascal (1N/m2)
PC	=	personal computer
PCC	=	Plain Cement Concrete
PD	=	Permissible Deviation
PE	=	Polyethylene
pH	=	hydrogen ion concentration (acidity)
PI	=	Plasticity Index
ppm	=	parts per million
PVC	=	Poly Vinyl Chloride
RC or RCC	=	reinforced concrete
r/min	=	revolution per minute
s	=	second
SI	=	System International d'Unités
Si	=	silicon
SRPC	=	Sulphate Resisting Portland Cement
T	=	temperature
t	=	metric ton
uPVC	=	unplasticised polyvinyl chloride
V	=	Volt
W	=	Watt
WC	=	Water Closet
oC	=	degree centigrade
"	=	inch
%	=	percent
4WD	=	four wheel drive
<	=	smaller/less than
>	=	larger/more than

1.9.4 Measurement and Payment

No separate measurement and payment will be made for items provided under Clause 1.9, the cost of which shall be deemed to be included in the rates of the BOQ.

1.10 Securities and Insurances

1.10.1 Performance Security

The Contractor shall provide Performance Security in the required amount and currencies from an approved bank/financial institutions in accordance with relevant clause of the Conditions of Contract.

1.10.2 Insurance of Works and Contractor's Equipment

The Contractor shall also insure all his equipment against damages and losses with an approved insurance agency/institution as stipulated in relevant clause of the Conditions of Contract.

Insurance of Contractors Workmen And Employees

The Contractor shall insure all his employees and workmen against such liability as stipulated in Condition of Contract Clause 13 and submit the policy document to the Engineer within stipulated date.

1.10.3 Third Party Insurance Policy

The Contractor shall obtain a Third Party Insurance Policy as stipulated in the Conditions of Contract from an approved insurance agency/institution in the form acceptable to the Employer.

1.10.4 Insurance of Employer's Personnel

The Contractor shall insure all nominated personnel of the Employer including the Engineer's personnel against such liability as stipulated in the Conditions of Contract and submit the policy document to the Engineer within stipulated date.

Government of Nepal
Ministry of Infrastructure Development
Department of Water Supply and Sewerage Management
Water Supply and Sewerage Management Office
Butwal, Rupandehi

Office Chief

1.10.5 Measurement and Payment

Only the cost of providing Insurance Policies as described above shall be paid to the Contractor amount against submission of required insurance policies with the appropriate payment receipts, in the form acceptable to the Employer, and made provision in the BOQ.

1.10.6 Other Provisional Items

All provisional items in the schedule shall be carried out at the discretion of the Engineer, and shall form part of the contract. In case, the provisional items are carried out by the Contractor, the rates shall be settled as for extra items as stated in the conditions of contract.

1.11 Items Supplied by the Employer

Items supplied by the Employer, if any, are described in Appendix a of Particular Technical Specification.

Government of Nepal
Ministry of Infrastructure Development
Department of Water Supply and Sewerage Management Office
Water Supply and Sewerage Management Office
Butwal, Rupandehi

Office Chief

2 CIVIL ENGINEERING WORK

2.1 Site Clearance

2.1.1 Scope

This specification covers the removal of vegetation, boulders or concrete block of size up to 0.2 m^3, surface obstructions, and the demolition and removal of structures including their basements (if any) not directly associated with or incidental to any excavation.

2.1.2 Interpretations

2.1.2.1 Supporting Specifications

This specification contains stipulations that are generally and particularly applicable to site clearance

a) 1 General

b) 2.2 Earthworks, as applicable

2.1.2.2 Application

This specification contains stipulations that are generally and particularly applicable to site clearance.

2.1.2.3 Definitions

For the purpose of this specification the following definitions shall apply:

Cleared surface - The natural surface of the ground after clearing of surface vegetation has been completed.

Designated area - An area the position of which in relation to the work to be carried out is shown on the drawing or is described in the specification and is therefore known to the Contractor at the time of Bidding.

Finished level - The level of the finished earthworks as shown on the drawings or stated in the project specification.

Grubbing - The operation of digging out the roots of vegetation.

Original ground level - The level of the surface of an area before the commencement of clearing.

2.1.3 Materials

Material obtained from clearing and grubbing and from the demolition of structures shall be disposed of in tipping areas or other suitable places indicated by the Engineer and shall be covered with soil or gravel. Where no such place is indicated by the Engineer, the Contractor shall make his own arrangements for the provision of a suitable place. Such disposal places shall be subject to Environmental Mitigation Plan and approved by the engineer.

The Contractor shall not clear the Site of or damage any living tree having a girth more than 0.5 m (measured 1 m above the ground level) situated on the parts of the Site not subsequently to be occupied by the Works. All trunks and branches of cleared trees shall be stripped of secondary branches, sawn into transportable lengths and stacked at designated areas. Such timber shall be the property of the Employer and shall remain the property of the Employer.

Fencing wire shall be neatly wound into rolls or coils and all such wire, together with all fence posts and other re-usable material from walls, etc., shall be stacked at designated areas.

2.1.4 Construction Equipment

The Contractor shall provide saws for cutting of trees and branches as ordered, and plant that is suitable for grubbing roots and for digging out and removing other obstructions on the Site.

2.1.5 Construction and Workmanship

2.1.5.1 Areas to be Cleared and Grubbed

Prior to the start of any work, the Contractor should lay-out the right-of-way, working areas, clearing, and pavement cuts to insure a proper recognition and protection of the adjacent properties.

All lay-out work must be approved by the Engineer before any demolition, rehabilitation or construction begins.

The Contractor shall clear the parts of the Site subsequently to be occupied by the Works and shall maintain them clear of vegetation. Areas cleared shall include but not be limited to, portions of the Site where excavations are to be carried out and embankments and structures constructed, however, the Contractor shall not commence clearing and grubbing until the Engineer has designated, in writing and in detail, the exact areas to be cleared or grubbed and the time at which the work is to be started.

The Contractor shall ensure that the general shape, profile, and levels of the area are not materially altered during clearing and grubbing operations.

In order to avoid re-clearing or to control dust or erosion the Contractor may have to clear and grub at the latest practicable stage of construction.

Government of Nepal
Ministry of Urban Development
Department of Water Supply and Sewerage Management Office
Butwal, Rupandehi
Office Chief

2.1.5.2 Cutting of Trees

The Contractor shall take the necessary precautions to prevent injury to persons and animals and damage to structures and other private and public property. Where necessary, trees shall be cut in sections from the top downwards.

No tree shall be cut down until the Engineer has given written authorization for such work to commence.

If possible, trees shall be felled in such a manner as to allow removal of the root together with the trunk.

The Contractor shall be responsible for the disposal of cut trees. Prior to disposal, the Contractor shall identify the method of disposal and location of disposal sites if applicable, both of which shall be approved by the Engineer.

Individual trees indicated and marked by the Engineer as trees to be preserved shall be left standing and uninjured. An amount of NRs 100,000/- shall be deducted from monies due to the Contractor as a penalty in respect of every such tree that is damaged or removed unnecessarily or without the authorization of the Engineer.

2.1.5.3 Clearing

Clearing shall consist of:

a) the removal of all trees and bushes (complete with roots), other vegetation, rubbish, fences, and all other material that may interfere with the construction of the Works
b) the disposal of all materials resulting from the clearing
c) The removal of all rocks and boulders of size up to 0.2 m3 that are lying on the surface to be cleared or exposed during the clearing operation.
d) where fences have to take down, the sorting, coiling, and stacking of the material, and
e) The removal and stacking of other re-usable materials.

The moving of a certain amount of soil or gravel may be inherent in or unavoidable during the process of clearing. No extra payment will be made for the removal of such soil or gravel.

2.1.5.4 Grubbing

All stumps and roots larger than 75 mm in diameter shall be removed to a depth of at least 600 mm below original ground level. Where a road bed or other area has to be compacted, all stumps and roots included matted roots shall be removed to a depth of at least 200 mm below the cleared surface. The removal of stumps and roots shall be done in such a manner that the topsoil is least disturbed. Cavities resulting from grubbing shall be backfilled with approved material and compacted to a density at least equal to that of the surrounding ground.

2.1.5.5 Re-clearing of Vegetation

If during the contract period vegetation should again grow on any portion of the Site, or other areas that have been cleared in accordance with this specification, the Engineer may, if he considers it necessary, order that such area(s) be re-cleared.

Such re-clearing shall include the removal and disposal of grass, shrubs, and other vegetation, as in the first clearing operation.

2.1.5.6 Dismantling

Before moving equipment onto the Site and commencing operations the Contractor shall establish to the Engineer's satisfaction that the method of demolition proposed by the Contractor is such that he can keep any nuisance arising from dust, noise, and vibration to an acceptable level and ensure the safety of structures adjacent to those to be demolished.

The materials obtained from dismantling shall become the property of the Contractor. Serviceable materials shall be stacked neatly in such a manner as to avoid deterioration at site or at other places. Non-serviceable materials shall be disposed off by the Contractor without causing any inconvenience.

Dismantling of reinforced concrete structures shall be carried out using approved methods and in accordance with any safety regulations of the local municipality/VDC or relevant thereto. The Contractor should note that a Building Permit may be required for demolition work.

All rubbish shall be cleared off the site and the Ground let clean and clear and rubbish and non-serviceable materials shall be carted away in a manner acceptable to the local municipality up to a distance of 10kms as per the direction of the Engineer.

Underground structures shall be broken out to a depth of 1meter below original ground level. Sumps, pits, chambers and the like shall be properly cleaned out and filled with clean demolition hard-core, excluding any wood, plastic, sheet metal, loose reinforcement steel and the like.

The top surface of hardcore material shall be blinded with clean sand to a minimum thickness of 200mm.

Where directed by the Engineer, a reinforced concrete raft shall be cast over sumps, pits, etc. after filling.

The area shall be spread with approved fill material and graded to original levels, or such other levels as the Engineer may direct.

Dismantling of walls, tanks, plates inside building to be rehabilitated will be performed with the required care, without damaging the stability of the structure.

Where required or directed by the Engineer, the existing structure will be temporary reinforced to assure the stability. The Contractor will submit for the Engineer's approval the methods applied for demolishing and the proposed temporary safety measures. The Engineer's approval shall not relieve the Contractor of any of his responsibilities under the Contract.

2.1.5.7 Measurement and Payment

The items scheduled for clearance and demolition will be classified according to the nature of the materials involved and the methods of their disposal.

Only those areas designated to be cleared as indicated in BOQ will be measured for payment. The area of surfaced roads, structures, and paved areas falling within such designated areas will be deducted from such measurements.

Government of Nepal
Ministry of Infrastructure Development
Department of Water Supply and Sewerage Management Office
Water Supply and Sewerage Management
Butwal, Rupandehi
Office Chief

2.2 Earthworks

2.2.1 Scope

This specification covers earthworks carried out with light or heavy equipment or by hand, for general excavations, terracing, landscaping etc. It covers the requirements for site-works, excavations for foundations for reservoirs, buildings, bridges and general structures and reinstatement of surfaces.

2.2.2 Interpretations

2.2.2.1 Supporting Specifications

The following specifications shall, inter alia, form part of and shall be read in conjunction with this specification:

a) 1 General

b) 2.1 Site Clearance

c) 3.1 Pipe Trenches, as applicable

2.2.2.2 Application

This specification contains Clauses that are generally applicable to earthworks. Interpretations, additions, and variations of this specification (if any) are set out in the Particular Specification.

2.2.2.3 Definitions

For the purpose of this specification the following definitions shall apply:

Backfill - Approved material placed in an excavation after specified operations have been performed and compacted to specified density.

Borrow - Material obtained from various sources such as borrow pits.

Borrow pit - An excavation made for the purpose of procurement of material.

Bulk Excavation – An excavation made from original ground level to reduced site or platform level.

Catch water drain - An open drain and/or berm intended to intercept water and to lead it to suitable discharge points.

Excavation - An excavation, to accommodate a structure or pipeline, made below the original ground level or reduced site/platform level as appropriate.

Over break - Excavation carried out in excess of the designated profile.

Pass - In regard to compaction, a movement of an approved compacting machine from one end of the layer being compacted to the other end.

Specified density - The ratio of field density to laboratory-determined modified AASHTO maximum density.

Spoil - Unsuitable or excess material removed to waste dumping sites or reclaimatiosites.

Stockpile - A pile of material that has been selected, loaded, transported and unloaded in a heap outside the confines of a borrow pit or of an excavation that forms part of the Works.

Suitable material - That material which is acceptable in accordance with the Contract for use in the Works and which is capable of being compacted, in the manner specified, to form a stable fill having side slopes as indicated on the Drawings.

Top Soil - The top layer of soil shall containing organic components that can support vegetation.

Unsuitable material - Unsuitable material shall mean other than suitable material and shall include:

a) material from swamps, marshes or bogs;

b) organic and perishable material;

c) material susceptible to spontaneous combustion;

d) Clay of liquid limit exceeding 80 and/or plasticity index exceeding 55.

2.2.3 Materials

2.2.3.1 Classification for Excavation Purposes

The Engineer will decide on the classification of the materials, which will be based on inspections and criteria given below.

The excavation of material will be classified as follows:

a) Normal excavation. Material that can be efficiently (i.e. in a manner that can reasonably be expected of an experienced contractor, having regard to the production achieved) removed or loaded, with normal mechanical means.

b) Rock excavation. Rock is defined as all materials which, in the opinion of the Engineer, require blasting, or the use of metal wedges and sledgehammers, or the use of compressed air drilling for its removal, and which cannot be extracted by ripping with a tractor of at least 110 kW with a single rear mounted heavy duty ripper.

2.2.3.2 Classification for Placing Purposes

a) Material for embankments, terraces, etc. Such materials shall, generally, have a CBR of at least 3% (compacted at OMC), a PI not exceeding 18, and a maximum dimension of 300 mm, unless otherwise specified in the Technical Specifications.

b) Material for backfill or fill against structures. Material placed as backfill or as fill within 500 mm of structures shall comply with requirements specified under a) above except that it shall not contain more than 10% rock or hard fragments retained on a sieve of nominal aperture size 50 mm.

c) Stone used for rock fill, gabions and stone pitching shall be hard, tough, sound, and clean and derived from a source approved by the Engineer.

2.2.3.3 Selection

Topsoil, if required for later use on the Site, as well as any other material excavated that is suitable for backfilling or for filling against the finished structures, shall be selected and stockpiled in the vicinity of the structures. Topsoil shall be stockpiled in a manner to prevent its deterioration.

The use of top soil shall be restricted to surface layers in positions not subject to loading pavements or structures.

No excavated suitable material other than surplus to requirements of the Contract shall be removed from the Site except on the direction or with the permission of the Engineer. Should the Contractor be permitted to remove suitable material from the Site to suit his operational procedure, then he shall make good at his own expense any consequent deficit of filling arising there from.

If any suitable material excavated from within the Site is, with the permission of the Engineer, taken by the Contractor for purposes other than the forming of embankments and other areas of fill, sufficient suitable filling material to occupy after full compaction, a volume corresponding to that which the excavated material occupied shall, unless otherwise directed by the Engineer, be provided by the Contractor from his own resources.

Suitable material surplus to the total requirements of the Works and all unsuitable material shall, unless the Engineer permits otherwise, be run to spoil in tips provided by the Contractor.

Where the excavation reveals a combination of suitable and unsuitable materials the Contractor shall, unless otherwise agreed by the Engineer, carry out the excavation in such a manner that the suitable materials are excavated separately for use in the Works without contamination by the unsuitable materials.

Any material that is below the finished level of an excavation and that the Engineer considers to be unsuitable, shall be excavated and disposed of as directed. The resultant space shall be refilled with backfill and compacted as specified

2.2.3.4 Explosives and Blasting

No explosives of any kind shall be used by the Contractor without the prior consent of the Engineer in writing.

The Contractor shall at all times maintain full liaison with and inform well in advance, and obtain such permission as is required from, all Government authorities, public bodies and private parties whatsoever concerned or affected, or likely to be concerned or affected by blasting operations.

The Contractor shall comply with all relevant ordinances, instructions and regulations which the Government, or other person or persons having due authority, may issue from time to time regarding the handling, transportation, storage and use of explosives.

The Contractor shall store explosives in a licensed store or magazine provided with a separate compartment for detonators. Explosives shall be handled only by currently licensed shot firers. The Contractor shall ensure that there is no unauthorized issue or improper use of explosives brought on the Site.

Explosives shall be used in the quantities and manner recommended by the manufacturers. The written permission of the Engineer shall be obtained for each and every location or series of locations where the Contractor wishes to use more than 10 kg of explosives in one blast. Such permission shall not in any way relieve the Contractor of his liabilities under the Contract.

When blasting is carried out, the Contractor shall ensure, by adherence to proper safety distances and by the use of heavy blasting mats where necessary to prevent the dispersal of material, that no damage is caused to persons or

Property on or off Site. Special care shall be taken when blasting to ensure that individual explosions are reduced to such a size as to preclude damage to any buildings or structures. Blasting will not be permitted within 400 meters of any building or structure.

Before the beginning of the defects liability period the Contractor shall account to the satisfaction of the Engineer for all explosives brought on to the Site during the continuance of the Contract and the Contractor shall immediately remove all unused explosives from the Site on completion of the Works when ordered by the Engineer.

2.2.3.5 Gabions

Gabions shall consist of steel wire mesh crates. The steel wire shall be mild steel wire complying with IS 280-1962. The standard size of mesh size shall be 100 x 120 mm hexagonal shape with 10 SWG thickness mesh wire, 10 SWG thick binding and connecting wire and 7 SWG thick selvedge wire. The weight of deposition of zinc shall be minimum of 250 gm. per square meter equivalent for all the gauges of wire specified. The height of boxes shall be maximum of 1.0 m and diaphragms shall be provided at 1.0 m interval. Maximum size of gabion box will be limited to 3.0 m x 1.0 m x 1.0 m.

2.2.4 Construction Equipment

Equipment shall be suitable for obtaining the end result required under the conditions applicable to the Site.

Compaction equipment used for applying the dynamic load, controlling the moisture content, and grading or mixing, shall be capable of achieving the compaction specified with the material available.

Any vehicle or item of equipment provided by the Contractor for the transport of materials shall conform to the requirements of the applicable road traffic ordinance if the vehicle or equipment is required to operate on any public road, street, or area that has been surfaced.

Where any of the Contractor's operations or the movement of any of the Contractor's vehicles or equipment has caused damage to the surface of any area normally open to the public, the Contractor shall repair such surface as a matter of urgency, and at his own expense.

The Contractor shall provide and use, where applicable, equipment that is suitable for the detection and location of underground service pipes and cables.

Construction traffic shall not use the surface of the bottom of mass excavations unless the excavation is in rock or the Contractor maintains the level of the bottom surface at least 30 cm from formation level. Any damage to the formation arising from such use of the surface shall be made good by the Contractor at his own expense, with material having the same characteristics as the material which has been damaged.

2.2.5 Construction and Workmanship

2.2.5.1 Precautions

2.2.5.1.1 Safety and safeguarding

Every excavation that is accessible to the public shall be adequately protected by barriers or fences, provided with lighting at night and watched to ensure that barricades and lights are effective at all times. Reference shall be made to Clause 1.4.16 of this specification.

The Contractor shall suitably safeguard excavations if the depth of an excavation or the nature of the material excavated renders the sides of the excavation liable to movement that might endanger the Works or the workmen engaged on the excavation.

This safeguarding may consist of supports by timber or sheeting adequately strutted and braced, or, if approved by the Engineer, by a reduction of the slope of the excavated face or faces so that any danger to the Works or the said workmen is eliminated.

The Contractor shall make good any fall of earth or rock due to insufficient safeguarding at his own expense, as directed and by approved means.

Without relieving the Contractor in any way of his responsibility, the Engineer may order additional lateral support for, or the sloping or reduction of the slope of, the sides of any excavation. During the progress of each excavation, the Contractor shall report to the Engineer the presence of bedding planes inclined towards the excavation, seepage water and any other feature that may affect the stability of the excavation, as soon as the presence of such feature or features is known. All timbering and sheeting shall be removed from the excavation at the completion of the work, unless the written permission of the Engineer allowing any portion to remain is obtained.

Should blasting be necessary, the Contractor shall obtain the permission from the Engineer and the local authority well in advance and in writing and shall take every precaution to protect the Works and persons, animals and property in the vicinity of the Site. The Contractor will be held responsible for any injury or damage caused by any blasting operations

And shall, at his own expense, make good such damage. A copy of the blasting permit(s) issued to the Contractor to cover the purchase, storage, and handling of explosives, shall be handed over to the Engineer.

When blasting to specified profiles, the Contractor shall so arrange the holes and charges that the resulting exposed surfaces are as sound and stable as the nature of the material permits. The Contractor shall make good at his own expense any additional excavation necessitated by the shattering of rock in excess of a 150mm over break allowance.

2.2.5.1.2 Existing services

The Engineer's Drawings as well as the Contractor's working drawings show positions of existing underground services based on the best information available.

The Contractor shall, before commencing work in any particular area, verify the position of all underground services and all other obstacles and existing construction on the Site.

The Contractor shall have equipment required for the detection and location of underground services available on the Site and in an operable condition for as long as is necessary to detect and locate such services and, if so ordered, he shall excavate by hand to expose such services in areas and in a manner and at a time agreed upon with the Engineer.

The Contractor shall advise the Engineer at least 7 days in advance of the actual date on which he proposes to excavate near any service. He shall not use mechanical equipment to excavate within 3 m of the assumed position of any service and shall, if necessary, expose the service by means of hand excavation carried out under proper supervision. When so ordered, the Contractor shall backfill such observation trenches with approved material to the compaction density ordered.

Once a service is exposed the Contractor shall take all measures necessary for the support and protection of the service.

Where a service is damaged because of the Contractor's negligence, he shall inform the Engineer and the authority concerned make good such damage or bear the cost of the repairs, as applicable

2.2.5.1.3 Storm water and groundwater

The Contractor's responsibility will include the provision of adequate protection against erosion and flooding by storm water, flow from springs, and seepage, and to include provision for repair, at his expense, of any damage to the Works that may arise as a result of the inadequacy of the protection provided by him.

2.2.5.1.4 Nuisance

Wherever dust from the activities, haul roads, borrow pits or road deviations becomes a nuisance to the public the Contractor shall, when so ordered by the Engineer, apply sufficient water or take other measures to lay the dust, oil shall not be used.

All excavated material shall be so deposited as not to interfere with or endanger the Works, other property, or traffic. The Engineer may order the Contractor to remove, at his expense, any material that the Engineer considers liable to endanger or to interfere with the Works, private property, traffic, or pedestrians, and to place such material at some other approved location.

2.2.5.1.5 Roads

The Contractor shall reinstate and maintain the surfaces of all roadways through which trenches or other excavations have been made. Should any subsidence occur at the location of such trench or excavation, the Contractor shall immediately restore the road surface to its correct level. Where immediate restoration is impracticable, the Contractor shall provide adequate protection. The Contractor shall follow the Standard Specification for Roads & Bridges, 2001, published by the Department of Roads and its requirement to fulfill the above works.

2.2.5.1.6 Traffic control

Where work affects the operation or safety of public road traffic, the Contractor shall, comply with the requirements of the Clause 1.5.2 of the Specification.

2.2.5.2 Methods and Procedures

2.2.5.2.1 Site preparation

Before carrying out any work at any location, the location shall be inspected where necessary together with the Engineer.

The Contractor shall request in writing such inspections where in his opinion the situation shown in the Drawings has changed and/or is different from actual conditions.

After clearing, the location shall be surveyed in conjunction with the Engineer's representative to establish original ground levels, and these agreed ground levels shall form the basis for the calculation of quantities of any subsequent excavation and filling.

Should work commence in the absence of this joint survey, the Engineer's statement shall be final.

Prior to the start of excavation proper, if and as scheduled, all areas in which excavation is to take place or that are to be covered by banks, structures etc., shall be cleared as specified or directed by the Engineer.

Where so ordered, the Contractor shall remove and conserve the topsoil for later use in a manner approved by the Engineer. The Contractor will not be required to remove topsoil from any area in which the average depth of topsoil is less than 150 mm.

The Contractor is responsible for the transfer of line and grade from control points established by the Engineer. The preservation of stakes or other line and grade references provided by the Engineer is the responsibility of the Contractor.

The Contractor's method for setting the line and grade for the activities shall be approved by the Engineer.

2.2.5.2.2 Excavation

Excavation shall be carried out to the depth indicated or to such greater depths as may be required by the Engineer to ensure a satisfactory foundation.

Except where otherwise specified, shown on the Drawings, ordered or dictated by the requirements for safeguarding, excavation shall be so carried out and so trimmed to the outline of the concrete work shown on the Drawings that the excavated surfaces will act as forms for the concrete works. Such surfaces as well as the bottom of excavations shall be cleaned by hand, air or other effective means to remove all loose, soft or otherwise unsuitable material and as required by the Engineer.

Should the Contractor excavate to dimensions in excess of those stipulated or permitted, he shall fill in the excess at his own expense in the manner specified or approved by the Engineer. Excavated surfaces that will remain permanently exposed shall be finished off in a neat and workmanlike manner and shall be graded to provide adequate drainage.

When the Contractor is required by the Engineer to open up borrow pits, he shall maintain them so that they do not become a danger to persons and livestock. On completion of borrowing, the sides of the pits, if not filled with unused material, shall be graded 1V:2H, or as the Engineer may direct. The Contractor shall not spoil, stockpile, or waste any material without approval. He shall dispose of surplus and unsuitable material in areas designated by him and approved by the Engineer. Spoil heaps shall be flattened to present a neat level or graded surface with no danger of erosion.

All excavations in driveways, gardens and the like, private and/or enclosed lands, and premises shall be made by hand unless the consent of the owner to the use of (small) mechanical plant has been obtained by the Contractor.

The Contractor shall not sell any materials arising from excavations, demolitions and the like carried out on the Site unless permission is obtained from the Engineer.

2.2.5.2.2.1 Excavation of Foundation Pits & Trenches

Excavations shall be taken out to the least dimensions required to accommodate the several parts of the Works and shall provide any working space necessary for their excavation.

Excavations shall be carried out in such lengths, widths and depth at one time and in the sequence as approved by the Engineer and in such manner as to avoid any damage to the ground and adjacent property.

Excavations shall be timbered, sheeted and piled or otherwise supported to the extent necessary to support the surrounding ground and to ensure the safety of the Works and adjacent structures. Alternatively where specifically permitted they may be suitably battered.

Unless otherwise required by the Contract no timber or other supports shall be left in excavations without consent of the Engineer.

All proposed measures for the shoring and supporting of excavations or trenches shall be to the approval of the Engineer. Calculations showing the adequacy of any temporary works shall when required be submitted to the Engineer for approval.

2.2.5.2.2.2 Excavations to be Kept Free of Water

The Contractor shall provide and maintain and operate dewatering or other pumping equipment, and shall construct such drains, sumps and catch waters as may be necessary to remove water from the excavations or to prevent its entrance thereto. Water in the excavations shall be dealt with in such manner as will prevent the surfaces on or against which foundations or other work will be constructed from any deterioration of their natural condition, or from such condition as improved by work executed under the Contract.

The arrangement made for dewatering the ground, diverting water or removing water entering the excavations shall be to the satisfaction of the Engineer. Arrangements for removing water shall ensure that the dewatering of excavations can continue during the placing of concrete or execution of any other activities which could be adversely affected by water in or entering excavations. (The Contractor shall ensure that disposal of water does not create a nuisance or cause damage).

Precautions shall be taken especially when ground dewatering equipment is used, to ensure that the lowering of the ground water table in the vicinity of excavations or the removal of fine particles of soil from the ground surrounding the excavations causes no damage to sources of water supply, the adjoining Works or property, or the ground consolidated previously by others.

The Contractor shall take all necessary precautions to ensure the stability of any of the Works against floating or displacement during construction due to high sub-soil water level, flood or other causes.

The method of disposal of drainage water from dewatering operations shall be to the approval of the Engineer and the Employer. Drainage water shall be caught where necessary in holding lagoons which shall be constructed by the Contractor for the purpose or piped to approve disposal points as directed. The Contractor shall obtain all necessary approvals and No Objection Certificates for his disposal method.

Crossings of existing road corridors in disposal systems for drainage water from dewatering systems shall be laid as permanent structures to an acceptable standard of construction. Depth of cover to drainage pipes shall not be less than 1.5 Meters. Pipes shall be PVC or reinforced concrete with appropriate joints. Pipes shall be laid, bedded and backfilled to the approval of the Engineer.

Applications for approval for disposal of drainage water shall be made to the Engineer and Employer in the form of Method Statements giving the following information:

a) Routes, diameters, depths and materials of proposed pipelines.
b) Design of proposed holding lagoons.
c) Proposed daily average, and maximum pumping/discharge rates.
d) Effect on any existing disposal systems proposed to be used.
e) Any other information required by the Engineer or Employer.

2.2.5.2.2.3 Foundation Levels and Preparation of Foundations

Formation levels shall be at the levels shown in the Drawings or at such other levels as may be directed.

When approaching foundation levels in excavations in material other than rock, the final trimming to these levels, whether for actual foundations or for any blinding concrete required by the Contract shall not take place until placing of the blinding concrete or of concrete in the foundation is about to commence.

In the event of the Contractor requiring trimming the foundations in advance of readiness to place concrete, the trimmed foundations shall be protected against the ingress of moisture or the evaporation of soil moisture.

In the case where blinding concrete is required by the Contract no trimming of side faces of excavations shall be carried out for 24 hours after the placing thereof.

Where foundations are in rock, as the excavations approach finished level, the Contractor may be directed to continue excavating without the use of explosives or with limited use thereof by shallow holes and light charges. The final trimming of the foundations shall be executed without explosives by approved hand tools.

Immediately before placing concrete against rock surface, all loose and soft material shall be removed from surface by the use of stiff brooms, hammers, picks and air/water jets. Before the placing of concrete all water shall be removed from depressions and the Contractor shall take all measures necessary to keep all rock faces, against which concrete is to be deposited, dry and properly drained.

2.2.5.2.2.4 Protection of Slopes during Contract Period

The Contractor shall be responsible for the protection of slopes formed during the initial earthmoving stage, from subsequent erosion or damage throughout the period of the Contract, caused either by natural means or as a result of subsequent construction operations, or by construction traffic or any traffic.

The form of protection to be used shall be to the approval of the Engineer. During or after the initial earthmoving, the Contractor shall submit his proposals for the protection of the formed slopes. No subsequent construction activity will be permitted until the approved form of slope protection has been carried out.

The permanent form of protection of slopes shall be as described elsewhere in the Specification.

2.2.5.2.3 Placing and compaction

Where approved material from excavations is insufficient to form designated embankments, terraces etc., the Contractor shall, unless otherwise ordered, obtain the additional material, as directed, from borrow pits at locations approved by the Engineer.

Government of Nepal
Ministry of Infrastructure Development
Department of Water Supply and Sewerage Management
Water Supply and Sewerage Management Office
Office Chief

2.2.5.2.3.1 Fill in embankments terraces etc.

The fill material shall be free from vegetable matter and shall contain no debris or deleterious matter. The embankment area shall be stripped, grubbed, and cleared prior to placing of embankment fill. The level shall be taken after the stripping and grubbing to arrive at the actual height of fill involved. Nothing extra shall be paid for stripping grubbing etc. Work shall be in good workmanlike manner.

The material of each embankment shall be deposited in layers of thickness, before compaction, not exceeding 300 mm. The material shall be spread to form a layer that is of approximately uniform thickness, and graded over the whole area of the embankment. Each layer shall be compacted at OMC to a density of at least 90 % of modified AASHTO maximum density in the case of cohesive soil or 98 % in the case of non-cohesive soil, unless indicated otherwise on the Drawings.

Should the material be too wet, owing to rain or any other cause, it shall be harrowed and allow to dry out to the correct moisture content before compaction is undertaken. The Contractor shall ensure that storm water will at all times be discharged uniformly over the full area of each embankment or through specially prepared and protected drainage ditches to prevent scouring of the slopes. Where it is necessary to use clay or clayey material in embankments, such material shall be placed not less than 1 m and not more than 5 m below the finished surface.

Where hand-compacting is employed in no case shall the number of men filling-in be more than half the number of men compacting.

Watering-in of backfill will not be allowed, except in some special cases, and if directed or approved by the Engineer.

The Contractor shall be responsible for the suitability of all embankment materials under the Contract until final acceptance of the work. The Contractor shall replace any portions which have become displaced due to carelessness and negligence on his part or to damage resulting from natural causes not attributable, in the opinion of the Engineer, to unavoidable movements of the ground up to which the embankment is made.

2.2.5.2.3.2 Backfilling and Filling

Where backfilling or filling around or against structures has been authorized by the Engineer, such filling shall be placed, and shall be compacted approximately simultaneously on both sides of the structure to minimize unequal loading. All excavations shall be carefully refilled with approved material in layers of thickness not exceeding 200 mm. Each layer shall be compacted, using power rammers or vibrating plate compactors, to a density equal or better than that of the adjoining undisturbed material. Each layer shall be completed before the next is added. Except with the consent of the Engineer, filling shall not be deposited in water.

Timber sheeting and other excavation supports shall be carefully removed as the filling proceeds except where they are required by the Contract, or directed by the Engineer to be left in position, but removal of such supports will not relieve the Contractor of his responsibilities for the stability of the Works.

No filling shall take place around any structure until the Engineer's approval to backfill has been obtained and no backfilling shall take place around sumps, tanks or any other water retaining structures until the structure has been tested and a certificate of compliance with the specified test issued

2.2.5.2.4 Rubble Masonry, Stone Paving & Pitching

In rubble masonry walls the joints shall be broken vertically and staggered bond stones shall be provided to the full wall thickness. More than one meter high wall shall not be allowed and constructed at a time. Each stone shall be 150 mm to 250 mm high, 200 mm to 300 mm long and 100 mm to 150 mm wide and the whole masonry work shall be well bonded by cement mortar as mentioned in the Drawings. The faces of all stones showing externally shall be rough hammer dressed to a convex surface. The mortar joints shall be 15 to 20 mm thick. Finished rubble masonry works shall be wetted by water and prevented from drying out for at least seven days after construction.

Stone paving shall be pitched by hand and set in places in such a manner as to secure the greatest possible compactness and solidity; the smaller interstices shall be filled in with stone chips firmly wedged in with hammers. Rubble for paving is to be carefully bedded and grouted in cement mortar (1:3) to form an even surface.

Stone pitching shall be laid on a filter layer of gravel. The stones shall be pitched by hand to provide a dense uniform surface with even joints.

2.2.5.2.5 Gabion works

Gabion crates shall be filled with large stones with minimum voids between the stones.

2.2.5.2.6 Landscaping

On completion of earthworks to the finished level, the whole surface shall be graded, shaped and compacted to final grades and levels. The surface shall be lightly watered as the Engineer may direct.

If ordered by the Engineer, topsoil shall be placed on level and slightly graded areas and shall be lightly compacted by tamping, and trimmed neatly to required lines, grades, and levels. The final thickness of topsoil after compaction shall be at least 200 mm.

If ordered by the Engineer, grass or other vegetation shall be planted after top soiling has been completed. Such planted areas shall be neatly trimmed and well-watered, and the Contractor shall ensure that planted areas are not permitted to dry out. Any grass or vegetation planted that fails to grow shall be replaced by the Contractor, at his expense.

All land drains, like irrigation channels, culverts, etc. which have been severed during excavation work shall be carefully reinstated by the Contractor at his cost in either similar or approved equivalent material or construction.

Particular attention shall be paid to the support of reinstated drains in filled ground.

2.2.6 Tolerances

2.2.6.1 Positions, dimensions, levels, etc.

The work shall be finished to and within the limits (permissible deviation = PD) given below:

a) Excavations

(i) position on plan, i.e. PD in plan of any point measured from nearest grid line: ±35 mm

(ii) dimensions on plan, i.e. PD from the designed dimensions: -10 to +50 mm

(iii) foundation level, i.e. PD in level of surface of excavation trimmed to receive blinding concrete: ±50 mm

(iv) Level (other than foundation level), i.e. PD from designed levels with reference to nearest transferred bench-mark: ±15 mm

b) Embankments, terraces, etc.

(i) position of top edge, i.e. PD from designated position of any point, measured from nearest grid line: ±300 mm

(ii) alignment of top edge, i.e. PD from a line joining any two points 30 m apart on top edge of embankment: ±100 mm

(iii) finished levels, i.e. PD from designated levels with reference to nearest transferred bench-mark: ± 50 mm

(iv) slopes of top surfaces, i.e. PD from rate of fall: ± 5 % i.e. if fall 10% tolerance 9.5 to 10.5%

2.2.6.2 Moisture content and density

The permissible deviations (PD) shall be as given below:

a) OMC in field during compaction: +1% and -2%

b) specified density: +(no top limit) and -0

2.2.7 Testing and Acceptance

To determine founding conditions or for other purposes, the Engineer may require the Contractor to drill, auger or excavate bore holes in advance of the start of construction. When so requested by the Engineer, the Contractor shall provide labour, tools, machinery and equipment for sinking such exploratory holes and for refilling them. Such operations will be paid as day work.

The Contractor shall carry out sufficient tests to satisfy himself about the consistency of material placed in embankments and as backfill, and submit a test report to the Engineer.

The Engineer may carry out check tests as he deems necessary, at any depth or at any layer. Where these tests reveal that the material used does not comply with the applicable requirements of the specification, or that the compaction specified has not been attained, the Contractor shall rectify the work to the satisfaction of the Engineer.

2.2.8 Measurement and Payment

Rates for excavation shall cover the cost of excavating, forming excavated material embankments, terraces, shoring and supporting excavations, protection of structures, provision for existing services, dealing with storm and ground water, protection of slopes, and the cost of disposal of any surplus and unsuitable material to a tip identified by the Contractor and approved by the Engineer.

The Contractor shall be responsible for making all arrangements for the disposal of surplus excavated material up to a distance upto10kms at no extra cost. The cost for all lift, disposal including transportation shall be included in unit rate of excavation.

Rates for excavation shall cover the cost of excavating and proper placing of material for re-use. Excavation shall be restricted to limits of excavation as provided in drawings.

Rates for filling shall cover the cost of the provision of suitable material from any lead distance, placing in layers, and compacting as specified. Filling quantity will be restricted to quantity excavated till limits of excavation only. Extra excavations beyond limits of excavation, as shown in drawing, to be filled up with suitable material as directed by engineer at contractor's cost.

The Contractor shall be responsible for making all arrangements for the disposal of surplus filling material up to a distance up to 1 km at no extra cost. The cost for all lift, disposal including transportation shall be included in unit rate of filling.

Rates for landscaping shall include trimming the earthworks to final grades and levels, disposal of surplus materials, planting and seeding, reinstatement of land drains.

Excavations which are required to be backfilled will be measured as if taken out with vertical sides regardless of whether they have been taken out with sloping sides. They will be measured from the net plan of the finished concrete footing, foundation, building or concrete structure except that, in the case of conical-bottomed tanks or other such structures, the volume will be measured from the finished outline of the concrete as shown on the drawings.

Fill is measured as the volume between ground levels before and after the filling and the rate will include forming embankments, terraces, etc.

Landscaping is measured as the area over which finishing is required; it shall exclude areas covered by structures, roads and pavements.

Government of Nepal
Ministry of Infrastructure Development
Department of Water Supply and Sewerage Management Office
Water Supply and Sewerage Management
Butwal, Rupandehi

Office Chief

2.3 Cement Concrete

2.3.1 Scope

This specification covers the requirements for plain and reinforced concrete, either cast-in-situ or precast, for civil engineering and building construction applicable to this project.

2.3.2 Interpretations

2.3.2.1 Supportingspecifications

The following specifications shall, inter alia, form part of and be read in conjunction with this specification:

a) 1 Item of General Application

b) 2.2 Earthworks, as applicable

2.3.2.2 Application

This specification contains clauses that are generally applicable to concrete and structural precast concrete work.

2.3.2.3 Definitions

For the purpose of this specification the following definitions shall apply:

a) General

Adverse weather. Cold weather, or weather in which the ambient temperature is above 25°C, or the relative humidity is low, or the wind velocity is high, or weather in which any combination of the latter three conditions occurs, and which tends to impair the quality of fresh or hardened concrete or otherwise causes concrete to have abnormal properties.

Approved laboratory - A laboratory suitably equipped and staffed for purposes of concrete testing and as such approved by the Engineer.

Cold weather - Weather conditions in which the ambient temperature is 5°C or less.

Concrete cover - The thickness of concrete between the face of the concrete and the outside of reinforcing steel nearest this face as cast.

Cool weather - Weather conditions in which the ambient temperature is higher than 5°C but not higher than 15°C.

Fixture - An item such as a bolt, anchorage, bearing, or the like that is cast or grouted into concrete.

Formwork - Temporary work that is required to support and shape the concrete for a structure.

Hot weather - Weather conditions in which the ambient temperature is higher than 25°C.

Normal weather - Weather conditions in which the ambient temperature is higher than 15°C and less than 25°C.

b) Quality

Class of concrete - See grade of concrete.

Consistency - The extent, as measured by the slump test, to which fresh concrete resists flow or deformation.

Designed Mix – A mix specified by its required performance in terms of strength.

Grade of concrete - An identification number for the concrete, the number being numerically equal to the characteristic compressive strength at 28 d expressed in MPa.

Prescribed mix - Concrete for which the Engineer has prescribed the mix proportions.

Ready-mixed concrete - Concrete complying with the relevant requirements of the specification and delivered to the Site in a plastic state.

Target slump - The average value for the slump of concrete aimed at ensuring compliance with the slump required in terms of the specification.

Workability - The property of fresh concrete that determines the ease with which it can be placed and compacted without segregation of the constituent materials.

c) Strength

Characteristic compressive strength - See specified strength.

Specified strength - The required concrete strength (or the strength corresponding to the required concrete grade) stated on the Drawings or in the Technical Specification and which in all cases represents the strength below which not more than 5 % of valid 28 d test results obtained on cubes of concrete of the same grade can be expected to fall.

Designed Mix - The mix shall be designed to produce the grade of concrete having the required workability and a characteristic strength.

Target strength - An average value of the strength of concrete that is higher than the characteristic strength and is aimed at to ensure that the characteristic strength is attained. (Note: If the standard deviation can be determined, the value of the target strength is at least equal to the specified strength plus 1.64 times the standard deviation of valid 28 d test results.)

Valid test result – The average result obtained from the testing of cubes of concrete as defined in IS: 4634-1968 or equivalent BS 5328 Part 4.

d) Joints

The location of joints is controlled by design requirements and construction limitations. Joints shown on the Engineer's Drawings are "designated construction joints" and are required for design requirements and cover "movement joints", "contraction joints" and "expansion joints". The Engineer may, at the request of the Contractor, give his consent to further joints before the casting of concrete to suit the Contractor's method of construction. These shall be defined as "construction joints". In the event that the placing of concrete has to be halted due to equipment failure, inclement weather, movement of shutters or some other event, which are not the Employer's risk, which requires the halting of concreting, and "unforeseen construction joint" shall be formed. Where they are to the Employer's risk they shall be defined as "unforeseen designated joints"

2.3.2.4 Abbreviations

For the purpose of this specification, the abbreviation for reinforced concrete shall be RCC and the abbreviation for plain concrete shall be PCC.

2.3.3 Materials

2.3.3.1 Approval of materials

The Contractor shall supply in good time to the Engineer for his approval, samples of the aggregates and, if so ordered, of the water, that he proposes to use for the concrete and shall furnish evidence that the water and aggregates comply with the requirements of the Contract. Evidence shall be in the form of a statement from an approved laboratory of the results of tests, or an authoritative report or record of previous experience.

2.3.3.2 Cement

Unless otherwise specified the cement used in the Works shall be rapid hardening cement confirming to IS 8041-1990 or high strength ordinary Portland cement (OPC) complying with IS 8112-1989 or related equivalent BS and Nepalese Standards. The use of high-alumina cement (IS-6452-1972) or supersulphated cement (IS 6909-1990) will not be allowed.

The Contractor shall require the manufacturer to provide a certificate for each consignment of cement received at the Site. The Contractor shall maintain a record available for inspection by the Engineer of the locations of concrete from each consignment.

Within eight weeks of the award of the Contract a report on proposed cement sources shall be submitted to the Engineer. The report shall propose primary and secondary sources of supply and shall give each manufacturer's full analysis of chemical composition and physical properties.

The report on cement sources shall be submitted at least four weeks in advance of the commencement of work on trial concrete mixes.

The Contractor shall supply samples of cement, when requested by the Engineer both from any store on Site and the place of manufacture.

If required by the Engineer the Contractor shall ascertain whether the alkali content of cement is greater than 0.6% calculated as Na2O + 0.658 K2O. For alkali contents greater than 0.6% the Engineer may require tests in accordance with BS EN 196 to determine the alkali content of the cement.

The Contractor shall conduct preliminary and works tests as required by the Engineer to determine fineness, compressive strength (mortar cube) at 7 days and 28 days, initial and final setting time and soundness of the cement, as described in IS/BS/NS.

Separate storage facilities shall be provided on the Site for each type of cement used. Cement shall be fresh when delivered to Site and the consignments shall be used in the order of their delivery. The Contractor shall mark the date of delivery on each consignment and each consignment shall be stored separately in such manner as to be easily accessible and identifiable. No cement in bags or other container shall be used unless these and the manufacturer's seals are intact at the time of mixing. If the cement is delivered in bags it shall be stored under cover and on elevated floors that provide proper protection against moisture and other factors that may promote deterioration. Bulk cement may be used providing it is stored in approved weather-proof silos or similar containers provided that the cement drawn for use is measured by mass and not by volume.

The Contractor shall not use cement, which has hardened into lumps, but subject to removal of the lumps by screening, the Engineer may allow such cement to be used in non-structural concrete mixes.

Office Chief

Government of Nepal
Ministry of Urban Development
Department of Water Supply and Sewerage Management
Water Supply and Sewerage Management Office
Butwal, Rupandehi

2.3.3.3 Water

The water used for mixing and curing shall be clean and free from injurious amounts of oils, acids, alkalis, salts, sugar, organic materials or other substances that maybe deleterious to concrete or steel. Portable water shall be generally considered satisfactory for mixing concrete. The quality of water shall correspond to IS: 456-2000 (Clause 5.4).

Regular tests of the water shall be made by the Contractor during construction of the Works as instructed by the Engineer. The water shall be sampled at the point of discharge into the mix. The Contractor shall supply two copies of each test result to the Engineer.

2.3.3.4 Aggregates

Aggregate shall consist of naturally occurring (crushed or uncrushed) stones, gravel and sand or combination thereof. They shall be hard, strong, dense, durable, clear and free from veins and adherent coating; free from injurious amounts of disintegrated pieces, alkali, vegetable matter and other deleterious substances. As far as possible, flaky, scoriaceous and elongated pieces should be avoided.

Aggregates shall not contain any harmful material described in Clause 3.21, IS: 383-1970, such as pyrites, coal, lignite, mica, shall or similar laminated material, clay, alkali, soft fragments, sea shells and organic impurities in such quantity as to affect the strength or durability of the concrete. Aggregates to be used for reinforced concrete shall not contain any material liable to attach the steel reinforcement. The maximum quantity of deleterious materials shall not exceed the limits set in Clause 3.21, IS: 383-1970.

The contractors should supply samples of the aggregates for the purpose of making preliminary tests for concrete. Method of sampling of aggregate or concrete shall be as per IS: 2430-1986 and method of test for aggregate for concrete shall be as per IS: 2386.

Graded or Single-Sized Coarse Aggregates shall be supplied in the nominal sizes as per clause 4.1 and 4.2 of IS: 383-1970. The proportion of sizes and shapes of the aggregates shall be determined by the method described in IS: 2386 (Part I) -1963.

The grading of fine aggregates for concreting shall be within the limits given in Clause 4.3 of IS: 383-1970 and shall be described as fine aggregates with grading zones of I, II, III, and IV.

Immediately after commencement of the Works, the Contractor shall supply samples of proposed aggregates and also carry out preliminary testing on proposed aggregates for compliance with the Specification. The results of such tests shall be to the satisfaction of the Engineer before the Engineer will give approval to the source of aggregates proposed by the Contractor. Alternatively, and subject to the approval of the Engineer, the Contractor may submit certified results of tests on the aggregate carried out by an independent laboratory for the Engineer's approval of the source of aggregate.

During the performance of the Contract, the Contractor shall supply samples of aggregates when required by the Engineer for testing. The method of sampling shall be done in accordance with IS: 2430-1986. The amount of material required for each test shall be as specified in the relevant method of test given in IS: 2386 (Part I) -1963 to IS: 2386 (Part VIII) -1963.

All the tests shall be carried out as described in IS: 2386 (Part I) -1963 to IS: 2386 (Part VIII) -1963. When tests are necessary for combined aggregates, the aggregates shall be separated into two fractions, one finer than 4.75 mm IS Sieve and the other coarser than 4.75 mm IS Sieve. Appropriate tests shall be made on samples from each component, the former being tested as fine aggregate and the latter as coarse aggregate.

The contractor shall provide samples or perform any tests as required by the engineer and shall allow access to and provide attendance to enable the engineer to inspect and sample the sources of all materials in quarries, pits, river beds or other sources.

Any rejected aggregate shall be promptly removed from Site within 24 hours.

2.3.3.5 All-In-Aggregates (Combined Aggregates)

If the combined aggregates are available, they do not have to be separated into fine and coarse aggregates but necessary adjustments can be made (with the instructions of the engineer) in the grading by the addition of Single-Sized aggregates. The grading of combined aggregates shall be done in accordance with Table 5 of IS 383 -1970. (Clause 4.44),

Government of Nepal
Ministry of Infrastructure Development
Department of Water Supply and Sewerage Management
Water Supply and Sewerage Management Office
Office Chief

2.3.3.6 Admixtures

Admixtures shall not be used in any way in trying to replace any quantity of cement and shall conform to IS: 9103 -1999. Admixtures shall not be used in any concrete without the approval of the Engineer. Admixtures may require tests to be made before they are used. To facilitate approval, the Contractor shall provide the following information:

a) the trade name of the admixture, its source, and the manufacturer's recommended method of use
b) typical dosage rates and possible detrimental effects of under-dosage and over-dosage
c) whether compounds (such as those containing chloride in any form as an active ingredient) likely to cause corrosion of the reinforcing steel or deterioration of the concrete are present, and, if so, the chloride content (expressed as chloride ions or as anhydrous chloride) by mass of admixture
d) The average expected air content of freshly mixed concrete containing an admixture which causes air to be entrained when used at the manufacturer's recommended rate of dosage.

If the use of air-entraining agent is permitted by the Engineer, test measurements shall be carried out on Site by the Contractor, as and when required by the Engineer, to determine

a) the percentage of air entrained in the concrete, and
b) The density of concrete.

The Contractor shall provide equipment to permit measurement of entrained air at such frequencies as are required by the Engineer.

2.3.3.7 Reinforcement

This work shall consist of the supply of all reinforcing bars and fabric of the type, shape, size, and grade required for concrete structures and placing them in accordance with this specification, as shown on the drawings or as directed by the engineer.

The contractor shall supply the reinforcing steel necessary for the completion of the work. The reinforcing steel shall be any of the following if not mentioned on the drawings:

a) Mild steel and medium tensile steel bars conforming to IS: 432 (Part I) -1982 or equivalent of Nepalese Standard.
b) Hot-rolled deformed bars conforming to IS: 1139 -1966 or equivalent of Nepalese Standard.
c) Cold-twisted bars conforming to IS: 1786 - 2008.
d) The modulus of elasticity of steel shall be taken as 200 KN/sq.m.

If the contractor can produce a manufacturer's certificate which can be identified with the reinforcing steel by numbers or identification marks, it shall be accepted as evidence that the steel complies with the relevant specification. If the contractor cannot produce such certificates and if the engineer requires tests to be performed to satisfy himself that the steel complies with this specification, then the contractor shall supply a certificate of compliance with this specification or send for testing one test piece in each size of reinforcing steel with each batch of steel delivered to the site at least three weeks before the steel is due to be incorporated in the works. In case of each test piece that fails, the steel represented by such test pieces shall be rejected.

All hard drawn steel wire fabric shall confirm to IS: 1566-1982 and rolled steel made from structural steel shall confirm to BIS: 226-1975.

Steel reinforcement shall be protected at all times from injury. It shall be stacked in racks above the ground and shall at all times kept clear of mud. Reinforcement steel which is free from dirt, detrimental scale, paint, oil, loose rust or other foreign substance can only be placed in the work.

2.3.3.8 Storage capacity

The storage capacity provided and the amount of material stored (whether cement, aggregates, steel, or water) shall be sufficient to ensure that no interruption to the progress of the work is occasioned by lack of materials.

2.3.3.9 Deterioratedmaterial

Material that has deteriorated, or that has been contaminated or otherwise damaged, shall not be used in the concrete. Such material shall be removed from the Site without delay.

2.3.3.10 Water stops

The Contractor shall supply and fix Water stops in all joints in members which are to be water-retaining and where shown on the Drawings.

Water stops built into joints shall be made of PVC, rubber, GI Sheet or similar approved material. They shall be obtained from manufactures approved by the Engineer and shall be stored, fixed and jointed in accordance with the manufacture's instruction. They shall be fabricated into the longest practicable units complete with angles and junctions at the

Manufacture's works and shall be made continuous throughout the structure below highest water level and where shown on the Drawings. The number of joints in the Water stop made on Site shall be kept to a minimum.

Where water stop joints are vulcanized or welded on site, jointing shall be performed strictly in accordance with the supplier's instructions and recommendations. The tensile strength of the spliced water stop at a factory-made splice shall be at least 90% of the water stop's tensile strength. The tensile strength of a water stops spliced at the site shall be 80% of the original strength of the water stop.

The Contractor shall supply the manufacturer's test certificates for each consignment of Water stops delivered to Site and shall, in addition, supply to the Engineer sufficient of each type and consignment for confirmatory tests to be carried out in accordance with the appropriate standard test procedure, if ordered.

2.3.3.11 Joint filler

Unless otherwise specified in the Contract, the joint filler shall be of expanded polystyrene, resin or bituminous bonded cork, or similar type (e.g. "FL excel"). The filler shall be obtained from a manufacturer approved by the Engineer and shall be stored and fixed in accordance with the manufacturer's instructions. The Contractor shall supply the manufacturer's certificate for each consignment of joint filler delivered to Site and shall, in addition, supply to the Engineer sufficient of each consignment for confirmatory tests to be carried out in accordance with the appropriate standard test procedure, if ordered.

2.3.3.12 Joint sealant

Unless otherwise shown on the drawings or ordered by the Engineer, an elastomeric two-part polysulphide or polyurethane sealer shall be used. Such joint sealers and the requisite priming materials shall be obtained only from manufacturers that have been approved by the Engineer. They shall be stored in accordance with the manufacturer's instructions and recommendations

The Contractor shall supply the manufacturer's test certificate for each consignment of each type of joint sealer delivered to Site and shall, in addition, supply to the Engineer sufficient of each type and consignment for confirmatory tests to be carried out in accordance with the appropriate test procedure, if ordered.

2.3.3.13 Waterproof Membrane

Unless and otherwise mentioned elsewhere, the waterproof membrane shall be combination of heavy polythene film and a thick self-adhesive rubber/bitumen compound of 1.5 mm thickness or alternatively a 1.5 mm butyl rubber membrane. A compatible solar protection material shall be used at the exposed perimeter of the membrane. Such waterproof membranes, solar protection material, and the requisite priming materials shall be obtained only from manufacturers which have been approved by the Engineer. They shall be stored in accordance with the manufacturer's instructions and recommendations.

The Contractor shall supply the manufacturer's test certificate for each consignment of waterproof membrane materials.

2.3.3.14 Concrete Curing Compound

Concrete curing compound for structures shall be a liquid resin or wax resin base membrane curing compound of a proprietary brand and shall contain a fugitive dye.

Test certificates, prepared by an approved testing laboratory, shall be supplied by the Contractor to show that the performance of the curing compound complies with the curing efficiency.

2.3.3.15 Premixed Grout

The grout used to secure holding down bolts or to fill under structural steelwork shall be premixed and with properties applicable to the application. All premixed grout shall be kept in conditions recommended by the manufacturer and shall not be used after the expiry date.

2.3.3.16 Bituminous Paint

Bituminous paint shall comply with BS 3416 or equivalent IS Standard, Type II for materials in contact with raw or treated water and Type I for all other cases as per BS.

2.3.4 Construction Equipment

2.3.4.1 General

All Construction Equipment shall be maintained in good working order at all times during concrete work.

2.3.4.2 Mixing equipment

The type and capacity of mixing machines shall be such that the rate of output of concrete is suitable for the rate of concreting. Each machine shall be capable of producing a uniform distribution of the ingredients throughout the batch and shall comply with the specification to which the manufacturer claims it has been manufactured. Worn or bend blades

And paddles shall be replaced. The inner surfaces of the mixer shall be clean and free from hardened concrete. The mixers used shall be specially suited to the production of low slump concrete.

Government of Nepal Ministry of Urban Development Department of Water Supply and Sewerage Management Office Butwal, Rupandehi

Office Chief

2.3.4.3 Vibrators

Vibrators shall be capable of fully compacting each layer of concrete. At least one standby vibrator shall be available at all times during concreting for every three vibrators necessary to maintain the rate of placing.

Vibrating equipment used for the production of precast elements, whether in the form of a vibrating table, an external vibrator attached to the mould, or an immersion vibrator, shall have the frequency that is suitable for the compaction of low slump concrete.

The concrete that is to be compacted by vibration should appear anything from earth dry to slightly glistening. The mix should have the appearance of lacking in fines.

Segregation is likely to take place when the concrete is tipped into the formwork and this should be avoided. The concrete mix should not contain surplus water and sand which will develop segregation under influence of vibrator compaction. The distribution of new concrete should be uniform for the whole section and the surface kept horizontal for the whole section all the time thus ensuring the movement of concrete is downward only. Vibrators shall not be used as a spreading or distributing agent.

The vibrators shall be of rotary out of balance immersion type or the electro-magnetic type and operate at a frequency of not less than 4,000 cycles per minute. The vibration shall be of such a power input as to produce an acceleration of 1 to 3 m/sec in the mass of the compacted concrete. The vibrators shall be provided for continuous operation.

Internal vibrators shall be disposed within the mix, when placed, so as to maintain the whole of the concrete under treatment in adequate state of agitation such that de-aeration and effective compaction may be achieved at a rate commensurate with the supply of concrete from the mixers. Insertion of vibrators at about 450 mm center is considered sufficient.

Vibration shall continue during the whole period occupied by placing the concrete, the vibration being adjusted so that the center of vibration approximates to center of the mass being compacted at the time of placing. The concrete should not be over vibrated and the period of insertion of internal vibration should be about 15 seconds at any point.

The concrete shall be considered fully compacted when the mortar fills the spaces between the coarse aggregate so as to form a glistening and even surface except for slight irregularities where the coarse aggregate breaks this smooth surface. When this condition has been attained the vibrators shall be withdrawn slowly.

The vibrator must not be placed against the steel or the formwork. The minimum distance shall be 8 mm. The compactor must be placed in such a position that formwork, reinforcement, and recently laid concrete may be subjected to the minimum amount of vibration.

2.3.4.4 Formwork

Formwork shall be so designed and constructed that the concrete can be properly placed and compacted and that, subject to the tolerances specified, the required shapes, finishes, positions, levels, and dimensions shown on the drawings are maintained. The formwork and joints shall be capable of resisting the dead load, including the pressure exerted by the wet concrete, wind forces, and all other superimposed loads and forces. If not otherwise directed, forms shall be made of timber where practicable.

The types of ties used and their position shall be such that the required finish is achieved and will not be marred by subsequent corrosion of the ties.

Unless otherwise shown or directed, formwork shall be such that exterior corners of finished concrete are provided with 25-mm chamfers and re-entrant corners without fillets.

2.3.4.5 Scaffolding and ladders

The Contractor is responsible for providing, erecting, dismantling, and removing safe and adequate lifting equipment and scaffolding where required at his own cost.

2.3.4.6 Casting beds and moulds

All casting beds for precast concrete shall be properly aligned and levelled. Adequate weather protection shall be provided should this be necessary to achieve the standards specified below.

2.3.4.7 Construction Equipment for handling, lifting, and stacking

The Contractor shall provide adequate equipment for handling, lifting, and stacking precast units that they do not become discolored and are protected from permanent damage due to stresses induced during handling or stacking or due to the use of slings, chains, and hooks.

Government of Nepal
Ministry of Infrastructure Development
Department of Water Supply and Sewerage Management Office
Water Supply and Sewerage Management
Butwal, Rupandehi
Office Chief

2.3.5 Construction and Workmanship

2.3.5.1 Reinforcement

Reinforcement Bars shall be straightened to eliminate any bends or kinks developed during delivery to the site. Bars shall be cut into the length and hooked and bent in accordance with the drawings. Bars shall not be straightened or bent in any way that may be injurious to the material.

Unless otherwise stated reinforcement shall be Fe 415 high strength deformed steel bar confirming to IS 1786 or equivalent to NS 191-2046.

Bent bar reinforcement shall be cold bent to the shapes shown on the drawings. Bending of bars shall confirm to IS: 2502-1963.

After cutting and bending, the bars shall be bundled or stocked according to their respective marks as shown in the bending schedule.

All steel reinforcement shall be accurately placed in the positions shown in the drawings and firmly held during placing and setting of the concrete.

Bars shall be held in position be wiring at all intersections with annealed wire not less than 1.25 mm diameter (preferably 16 gauge).

Distances from the forms shall be maintained by precast mortar blocks, plastic tipped metal chairs, metal hangers, plastic chairs, or other approved devices. Metal supports and tie wires which extend to the surface of the concrete shall not be permitted. Stirrups and distribution bars shall pass around the main bars and shall be securely wired thereto.

Layers of bars shall be separated by precast mortar blocks or by other equally suitable devices. The use of pebbles, pieces of broken stones or brick, metal pipe and wooden blocks shall not be permitted.

In case concrete blocks are used, they shall be cured by immersion in water for at least 7 days until 24 hours before the blocks are to be used.

Reinforcement in any member shall be placed and then inspected and approved by the engineer before the placing of the concrete begins. Concrete placed in violation of this provision shall be rejected and removal may be required.

Substitutions of different size bars will not be permitted unless written application, stating special reasons, is made at least 4 weeks before the reinforcing steel is to be placed. Such permission will not be guaranteed and will be subject to the approval of the engineer. Such permission may, however, be granted if the structure is not adversely affected and no additional payment will be made on account of these alterations.

All reinforcement shall be furnished in the full lengths indicated on the drawings and bar bending schedules. Splicing of bars except where shown on the drawing will not be permitted without the written approval of the engineer.

2.3.5.2 Splicing of Reinforcement

Splicing of reinforcing bars shall be either by lapping, or mechanical butt splicing at the option of the Contractor. Bars in excess of 44 mm diameter shall not be spliced by lapping. The location of splices, except where shown on the Drawings, shall be determined by the Contractor based upon using available commercial lengths where practicable. Unless otherwise shown on the Drawings or approved by the Engineer, splices in adjacent reinforcing bars shall be staggered. The minimum distance between staggered splices for reinforcing bars 25 mm diameter or smaller shall be the length required for a lapped splice in the bar. The minimum distance between the staggered butt splices for reinforcing bars 44 mm and larger shall be 1500 mm. Completed welded butt splices and mechanical butt splices shall develop not less than 90 percent of the specified minimum ultimate tensile strength of the un-splice reinforcing bar. Acceptance of welded butt splices and mechanical butt splices of approved design shall be based on qualification tests performed prior to making splices to be used in the work upon job control tests made during the progress of the work. Such tests shall consist of the fabrication and testing by the Contractor of sample splices and shall include testing satisfactory to the Engineer on all or any splices. Acceptable sample splices shall conform to the splicing requirements in this Clause. Splices made by lapping shall consist of placing the reinforcing bars in contact and wiring them together in such a manner as to maintain the alignment of the bars and to provide the minimum specified clearances. The length of lapped splices shall be as shown in Table 2-1 unless otherwise specified in the Drawing or ordered by the Engineer.

Table 2-1: LENGTH OF LAPPED SPLICES FOR REINFORCING BARS

Type of Bar	Diameter of Bar	Length of Lapped Splice in Diameter
Mild Steel Fe-250	Up to 32 mm	50 diameter of smaller bar
Tor Steel Fe-415	25mm or Less	55 diameter of Smaller Bar
Tor Steel Fe-415	More than 25 mm	55 diameter of Smaller bar
Steel >Fe-415	More than 25 mm	60 diameter of Smaller bar

Government of Nepal
Ministry of Infrastructure Development
Department of Water Supply and Sewerage Management
Water Supply and Sewerage Management Office
Office Chief

2.3.5.3 Placing of Reinforcement

Reinforcement shall be placed in position as given on the detailed design drawing and shall be secured at that position. In case of delay occurring between fixing of reinforcement shall be checked prior to concreting.

All bars are to be lapped for at least fifty-five (55) diameters except where otherwise shown on the plan or indicated in the reinforcement bar schedule. The least distance between parallel bars is to be 25 mm or one diameter whichever is greater. The positions of the laps are to be staggered throughout unless shown otherwise.

2.3.5.4 Cover of the Reinforcement

Unless otherwise shown on the drawings or directed by the Engineer, reinforcement shall have concrete cover and the thickness of such cover shall be:

a) At each end of the reinforcing bars not less than 25 mm nor less than twice the diameter of such bar;
b) For a longitudinal reinforcing bar in a column not less than 40 mm nor less than the diameter of such bar. In case of columns of minimum dimension of 200 mm or under, whose reinforcing bars do not exceed 12 mm, a cover of 25 mm shall be used;
c) For longitudinal reinforcing bar in a beam not less than 25 mm nor less than the diameter of such bar;
d) For tensile, compressive, shear or other reinforcement in a slab, not less than the diameter of such bar;
e) For any other reinforcement, not less than 15 mm, nor less than the diameter of such bar.
f) For reinforced concrete members immersed in water, concrete cover over reinforcement shall be minimum 50 mm.
g) The maximum cover for reinforcement shall not be more than 75 mm.

Unless otherwise specified by the engineer, tolerances for placing of reinforcement shall be within the following tolerances:

a) For effective depth 200 mm or less + (-) 10 mm
b) For effective depth more than 200 mm + (-) 15 mm

The cover shall in no case be reduced by more than one third of the specified cover or 5 mm whichever is less.

2.3.5.5 Formwork

Formwork will be classified in accordance with the surface conditions required on the finished concrete, as shown on the drawings or as directed. Such finishes will be as follows:

a) Class F1 Rough. No treatment of the surface of the concrete will be required after the striking of the formwork. The finish of the concrete need not be more accurate than Degree of Accuracy U3 as defined in terms of Clause 2.3.6.14.
b) Class F2 Smooth. Imperfections such as small fins, bulges, irregularities, surface honeycombing, and slight surface discolorations shall be made good and repaired by approved methods. The finish of the concrete shall be accurate to Degree of Accuracy U2 as defined in terms of Clause 2.3.6.14
c) Class F3 Special. Special finishes shall be as indicated on the drawings and BOQ.

If no Class of Finishes is specified in the BOQ or Technical Drawing, Class of finishes Class F2 shall apply.

Forms shall be erected with joints tight enough to prevent leakage of cement mortar.

Surfaces of forms (regardless of the material of which they are made) that are to be in contact with fresh (wet) concrete shall be treated with a coat of non-staining mineral oil or other approved material, or, in the case of timber forms, by thorough wetting of the surfaces with water, so as to ensure easy release and prevent adhesion of the formwork during stripping.

Before re-use, all formwork shall be reconditioned, and all form surfaces that are to be in contact with the concrete shall be thoroughly cleaned.

Where necessary for the proper placing of the concrete, temporary openings for cleaning, inspection, or placing and compaction purposes shall be provided and, subsequently, so closed as to provide the finish specified and to conform to the applicable tolerances specified.

Formwork shall not be removed before the concrete has attained sufficient strength to support its own weight and any loads that may be imposed on it. The Engineer's approval shall be obtained before formwork is removed. As a guide, the formwork shall remain in place, after placing of the concrete, as follows:

a) Concrete cast with OPC or SRPC, in hot or normal weather
   (i) Beam sides, walls, and unloaded columns 1 d
   (ii) Slabs with props left underneath 4 d

Government of Nepal
Ministry of Infrastructure Development
Department of Water Supply and Sewerage Management Office
Butwal, Rupandehi

Office Chief

(iii) Beam soffits with props left under 7 d

(iv) Slab props, including cantilevers 10 d

(v) Beam props, including cantilevers 14 d

b) Concrete cast with OPC or SRPC, in cold weather

(i) Beam sides, walls, and unloaded columns 1.5 d

(ii) Slabs with props left underneath 7 d

(iii) Beam soffits with props left under12 d

(iv) Slab props, including cantilevers 17 d

(v) Beam props, including cantilevers 21 d

In cool weather, stripping times shall be determined by interpolation between the periods specified for normal and cold weather.

If the Contractor can prove to the satisfaction of the Engineer that a period shorter than the appropriate minimum given above is sufficient to enable the concrete to comply with its requirements, the formwork may be removed after such shorter period.

Formwork shall be removed carefully so that shock and damage to the concrete are avoided.

Notwithstanding the provisions above, the Contractor shall be responsible for making good any damage to the concrete arising from the removal of formwork and its supports.

2.3.5.6 Holes, chases, and fixing blocks

No holes or chases, other than those shown on the drawings or approved by the Engineer, shall be cut or otherwise formed in the concrete. The manner of attaching fixtures to be embedded in the concrete shall be subject to approval by the Engineer.

Boxes for forming holes shall be constructed so as to be easily removable without damaging the concrete during removal. They shall be properly vented to permit the escape of entrapped air and shall be capable of being sealed, subsequently, to prevent the loss of grout.

2.3.5.7 Pipes and conduits

No pipes or conduits, other than those shown on the drawings or approved by the Engineer, shall be permanently embedded in the concrete.

2.3.6 Concrete

2.3.6.1 Quality

Concrete shall comply with the requirements for a designed mix to in Accordance to Clauses 5.1, 5.2.1, 8.2.1, 14.1.1, 35.1 of IS:456 -2000 or relevant BS Standard (BS 8110 and BS 8007).

The Contractor shall determine to the approval of the Engineer the actual proportions of ingredients for each class of concrete to be used in the Permanent Works.

The concrete shall meet the requirements given in the Table 2-2 the designation of the concrete mix, letter M refers to the mix and the number to the specified characteri4stic compressive strength of 15 cm cube at 28 days and is expressed in N/sq. m.

Table 2-2: GRADES OF CONCRETE

(In Accordance to Clauses 5.1, 5.2.1, 8.2.1, 14.1.1, 35.1 of IS: 456-2000)

Grade Designation	Specified Characteristic Compressive Strength at 28 days (N/sq. mm.)
M10	10
M15	15
M20	20
M25	25
M30	30

2.3.6.2 Grades of Concrete

Grades of concrete to be used shall be as specified in the drawings or as directed by the engineer. In any case Grade of Concrete is not mentioned in drawing, grades of concrete lower than M15 shall not be used in reinforced concrete.

Government of Nepal
Ministry of Infrastructure Development
Department of Water Supply and Sewerage Management Office
Water Supply and Sewerage Management Office
Office Chief

2.3.6.3 Mix Proportion

The mix proportions shall be selected to ensure that the workability of the fresh concrete is suitable for the conditions of handling and placing, so that after compaction it surrounds all reinforcements and completely fills the formwork. When concrete is hardened, it shall have the required strength, durability, and surface finish.

The determination of the proportions of cement, aggregates, and water to attain the required strengths shall be made as follows:

a) by designing the concrete mix,

b) By adopting nominal concrete mix.

Design mix concrete shall be preferred to the nominal concrete mix. If design mix concrete cannot be used for any reason on the work for grades of M20 or lower, nominal mixes may be used with the permission of the engineer.

2.3.6.4 Design Mix Concrete

The mix shall be designed to produce the grade of concrete having the required workability and a characteristic strength not less than the appropriate values given in Table 2-2.

When the results of sufficient number of tests (at least 30) are not available, then depending upon the degree of quality control expected to be exercised at the site, the value of standard deviation of the compressive strength of concrete given in Table 2-3 can be adopted for guidance but only if approved by the engineer.

Table 2-3: SUGGESTED VALUES OF STANDARD DEVIATION

Grade of Concrete	Standard Deviation for Different Degree of Control in N/sq. mm.		
	Very Good	Good	Fair
M10	2.0	2.3	5.3
M15	2.5	3.5	4.5
M20	3.6	4.6	5.6
M25	4.3	5.3	6.3
M30	5.0	6.0	7.0

The target strength for mix design and the selection of the water cement ratio shall be done according to IS: 10262- 2009.

2.3.6.5 Selection of Water Content and Fine Aggregates Ratio

For the desired workability, the quantity of mixing water per unit volume of concrete and the ratio of fine aggregate to the total aggregate by absolute volume shall be estimated according to Table 2-4 depending upon the nominal maximum size and type of aggregates. The water content corresponds to the saturated surface dry aggregate.

Table 2-4: SAND AND WATER CONTENTS PER CUBIC METER FOR GRADES UPTO M35

Nominal Maximum Size of Aggregate per cubic meter (mm)	Water Content of Total of Concrete (kg)	Sand as Percent Aggregate
10	208	40
20	186	35
40	165	30

The water content corresponds to the saturated surface dry aggregate.

2.3.6.6 Nominal Mix Concrete

Nominal mix concrete may be used for concrete of grades M10, M15, and M20. The proportions of materials for nominal mix concrete shall be in accordance with Table 2-5.

Table 2-5 PROPORTIONS FOR NOMINAL MIX CONCRETE

Grades of Concrete	Total Quantity of Dry Aggregate by mass per 50 kg of Cement (kgs)	Proportion of fine Aggregate to Coarse Aggregate by mass	Maximum Quantity of Water per 50 kg of Cement
M10	480	Generally 1:2 but subject to an upper limit of 1:1.5 and a lower limit of 1:2.5	34
M15	350		32
M20	250		30

The proportions of fine to coarse aggregates should be adjusted from upper limit to lower limit progressively as the grading of fine aggregates becomes finer and the maximum size of coarse aggregates becomes larger.

The cement content of the mix specified in Table 2-5 for any nominal mix shall be proportionately increased if the quantity of water in a mix has to be increased to overcome the difficulties of placement and compaction, so that the water cement ratio as specified is not exceeded.

Government of Nepal
Ministry of Urban Development
Department of Water Supply and Sewerage Management
Water Supply and Sewerage Management Office
Butwal, Rupandehi
Office Chief

2.3.6.7 Mixing of Concrete

a) Unless otherwise agreed by the Engineer concrete shall be mixed in a batch type mixer which shall comply with IS: 1791 -1985 or such other type as the Engineer may approve. When swing-type weight batchers are used they shall comply with IS: 2722-1964. Batch mixers will be tested and perform in accordance with IS: 4634-1968 or such other tests as the Engineer may require. Mixers which have been out of use for is mixed. Concrete shall not be mixed when the air temperature in the shade is Below 3°C (38°F) unless special precautions are taken which have been approved by the Engineer. During hot weather the Contractor shall ensure that the constituent materials are sufficiently cool to prevent the concrete from stiffening in the interval between its discharge from the mixer and its final position. Concrete shall be mixed for not less than 90 seconds nor more than 5 minutes from the time all constituents have been introduced into the mixer.

b) Hand mixed concrete shall only be used when specified or authorized in writing by the Engineer. It shall be made in batches of not more than 0.25 cubic meters and shall be mixed on a water tight level platform. The proper amount of coarse aggregate shall be measured in measuring boxes and spread on the platform and the fine aggregate spread over this layer, the two layers being not more than 300 mm in total depth. On this mixture will be spread the dry cement and the whole mass turned not less than 2 times dry; then sufficient clean water shall be added, evenly distributed and the whole mass again turned not less than 3 times, not including placing in the carriers or forms.

c) Ready mixed concrete batched off the site may be used only with the approval of the Engineer and shall comply with the requirements of IS: 4926 - 2003.

2.3.6.8 Control Over Production of Concrete

The Engineer shall be afforded all opportunity and facility to inspect the materials and manufacture of concrete and to take any samples or to make any tests. All such inspection, sampling and testing shall be carried out with the minimum of interference with the process of manufacture and delivery.

2.3.6.9 Batching of Concrete

a) Weight Batching: In normal circumstances weight batching shall be used. The mass of cement supplied in a standard sack shall not be less than 50 kg. All cement taken from bulk storage containers and from partly used sacks shall be batched by mass with additional 2 % of mass required.

Mixing water for each batch shall be measured. The amount of water measured shall be adjusted to allow for the moisture content of the aggregates.

The mass of the aggregate of each size shall be determined and a correction made for the moisture content of the aggregates.

b) Volume Batching: In special circumstances, and at the sole discretion of the Engineer, proportioning of materials by volume may be approved. If batching is by volume, the fine and the coarse aggregates shall be measured separately in suitable measuring boxes of known volume and of such capacity that the quantities of aggregates for each batch are suitable for direct transfer into the mixer. Bulking tests on the fine aggregate shall be conducted regularly and the results used for adjustment of the batch volume of the fine aggregate to give the true volume required.

2.3.6.10 Transportation and Placing of Concrete

No concrete shall be placed at any time without at least one day's notice being given to the engineer, and concrete shall be placed only in the presence of the engineer.

Before any concrete is placed, forms must be inspected to see if thoroughly clean, and all sawdust, shavings, nails, dirt and rubbish of any description must be removed from within the forms. Temporary openings shall be provided where necessary to facilitate cleaning and inspection immediately before depositing concrete.

Where concrete is to be placed on a rock foundation the surface shall be washed down with streams of water under sufficient pressure, and scarified with wire brush of by other effective means, to thoroughly cleanse the rock surface and to remove all dirt, gravel, scale, debris, rock fragments or other loose material. Where concrete is to be placed on other concrete including inclined and vertical surfaces, which has taken its final set, the forms shall be retightened and the concrete shall satisfactorily roughened with pick or other means if required, and shall be cleansed in a similar manner. All objectionable substance shall be removed from the surface of concrete at such times depending on weather conditions and rate of hardening, as the engineer may direct. When such area is cleansed and wetted, but free from surplus water, a wash of neat cement grout shall be scrubbed into the contact surface of the old concrete or rock with brooms and shall

Be thoroughly worked into all crevices and depressions. When required by the engineer, a coat of mortar shall be spread over the contact surfaces thus prepared, after which the concrete may be put in position and well rammed, and worked so as to make a thoroughly bonded and water-tight joint.

Government of Nepal Ministry of Urban Development Department of Water Supply and Sewerage Management Office Butwal, Rupandehi

Office Chief

No concrete shall be placed in position until the reinforcement, forms and supports or the foundation, as the case may be, have been inspected and passed by the engineer.

Concrete shall be placed only in the presence of the engineer.

Concrete shall be handled from the mixer to the place of final deposit as rapidly as practicable by methods which prevent the separation or loss of ingredients. Mixing and transporting equipment shall be free from hardened concrete and foreign materials on the inner surface. The concrete shall be deposited in the forms are near as practicable in its final position to avoid re-handling. It shall be so deposited as to maintain until the completion of the unit, a plastic surface approximately horizontal. Forms for walls or other thin sections of a considerable height shall be provided with openings, or other thin sections of a considerable height shall be provided with openings, or other devices, that will permit the concrete to be placed in a manner that will avoid accumulation of hardened concrete on the forms or metal reinforcement. Under no circumstances shall concrete which has partly hardened be deposited in the work.

When concrete is conveyed by chutes, the plant shall be of such size and design as to ensure a practically continuous flow in the chute. The angle of the chute shall be such as to allow the concrete to flow without separation of the ingredients. The delivery end of the chute shall be as close as possible to the point of deposit. When the operation is intermittent, the spout shall discharge into the hopper. The chute shall be thoroughly flushed with water before and after each run; the water used for this purpose shall be discharged outside the forms.

Concrete shall be deposited continuously and as rapidly as practicable unit the unit of operation approved by the engineer is completed. Any concrete which has taken its initial set will be rejected and under no circumstances shall concrete remain longer than twenty (20) minutes after mixing before being used, or such other time as may be determined by the engineer, to suit the setting properties of the cement, the position in the work and the weather conditions at the time of placing.

Cement shall not be placed in running water. No concrete shall be placed in water without the permission of the engineer, and the method of depositing shall be such as to minimize loss of cement, and subject to his approval. Care shall be taken that no water interferes in any way with the proper placing of concrete, and the Contractor shall not allow water to rise in any concrete until in the opinion of the engineer it has set sufficiently. Water shall be removed from excavation before concrete is deposited unless otherwise directed by the engineer. Any flow of water into the excavation shall be diverted through proper side drains to a sump, or be removed by other approved methods which will avoid washing the freshly deposited concrete. Water vent pipes and drains used for constructional purposes shall be filled by grouting or otherwise after the concrete has thoroughly hardened. Springs encountered in the foundation shall be plugged, piped or otherwise satisfactorily disposed off.

Concrete shall be gently placed into position and is not to be poured from a greater height than 1200 mm into the forms unless suitable chutes are specially provided for. It is to be placed and punned in layers not thicker than 150 mm and the section of the works undertaken shall be such that the next layer of concrete 150 mm thick will be placed on top of the first within twenty (20) minutes of placing the first layer, or such time as to preclude any danger of disturbing the first layer once it has taken its initial set. It is to be well worked and consolidated around the reinforcement and embedded fixtures and into corners of forms by means of suitable tools in such a manner as to prevent the formation of any void spaces and to ensure the most thorough compacting to obtain density and water tightness. At the same time by spading just inside the face of the forms, a good smooth and regular face is to be ensured when the forms are stripped. Concrete is also to be assisted into place by tapping the outside of the forms opposite the newly-placed concrete.

All concrete shall be done in as large sections as possible without a break, to ensure a minimum number of joints. In mass work, the masses of concrete laid at different times shall break joints both horizontally and vertically. Whenever required, the work shall be so prosecuted that construction joints will occur only at designated places and when so directed, the Contractor shall complete by continuous depositing of concrete, sections of the work bounded by such joints. Joints not indicated on the plans shall be so designed and located to the approval of the engineer.

When placing of concrete is to be interrupted long enough for the concrete to take its final set, provision for bonding will be made by leaving the surface rough by the use of forms of such styles and dimensions as to properly form the concrete joints into steps, dovetails, grooves or other ordered shapes. In the case of walls, the bond is to be helped by the formation of a continuous tapered tongue or key whose base width shall be approximately one-third of the thickness of the wall, and whose height shall be 75 mm. No concrete shall be placed on old work, which has taken its initial set, unless work is at least three (3) days old.

In the case of floor slabs, construction joints transversely to the span shall be made at the center of the span unless directed otherwise by the engineer. Longitudinal construction joints shall be made where shown on the plan or as directed by the Engineer.

Columns are to be placed in accordance with the instructions above, but in certain cases for long columns the engineer may allow the use of a "Tremie" pipe. Columns shall be poured up to the underside of the haunches of beams. The haunches are to be formed and poured with the beam.

Beams and slabs shall be poured together so that there is no break between the two, unless the Drawings expressly show such a break.

At the discretion of the engineer, concreting operations may be suspended during excessively hot weather.

The Contractor shall not permit walking over or upon finished surfaces of concrete until sufficiently hardened or until at least three (3) days after placing. While setting, the concrete must not be disturbed or subjected to vibration or interference of any kind.

Should concreting be stopped for any reason, the work is to be left protected, and is to be cleaned down before operations are resumed.

At all times, great care shall be exercised to prevent injury to concrete surfaces and the Contractor may be required to clean same before the completion of the contract.

The Contractor is to note particularly that adequate numbers and the very best class of workmanship will be insisted on. This will necessitate especially the conformation with this specification with regard to the amount of water used in mixing, the thorough tamping while placing, and the through cleansing of all surfaces from laitance or other matter on which concrete is to be placed.

2.3.6.11 Compaction of Concrete

The Contractor shall regard the compaction of the concrete as work of fundamental importance and shall produce a watertight concrete of maximum density compatible with the approved mix. Unless otherwise specified by the engineer, concrete shall be compacted with the use of mechanical vibrators of the type complying IS: 2505 - 1992, IS: 2506-1985 and IS: 2514-1963.

Compaction shall be assisted by the use of mechanical vibrators of the immersion type, but shall not involve the vibration of reinforcement or shutters except that vibration of shutters may be allowed, with the approval of the Engineer. Vibrators shall be inserted at least to the full depth of the newly deposited concrete and then slowly withdrawn to prevent the formation of voids. The procedure shall be continuous with points of insertion 150 to 225 mm apart. The number and type of vibrators available for use during each period of concreting shall be to the approval of the Engineer, which will not be given if sufficient stand-by vibrators in good working order are not readily available. If concreting is in the dark, ample lighting shall be provided at the mixing stations and at every place where concrete is being deposited.

Compaction shall be carried out by mechanical vibration or (if approved) by spading, rodding, or forking.

Over-vibration resulting in segregation, surface laitance, or leakage, or any combination of these, shall not be permitted. The rate of concrete placing shall be commensurate with the available compaction equipment and only skilled operators shall be permitted to undertake compaction by vibration.

Concrete for precast elements shall be so placed in moulds and vibrated that concrete surfaces are smooth and even and all arrises are true and clean.

Where precast units having architectural finishes are required, the Contractor shall ensure that duplicate samples are submitted to and approved by the Engineer with regard to both colour and quality before full scale production is commenced. One sample will be retained by the Engineer and the other shall be retained by the Contractor at the place of manufacture. The Contractor shall not commence manufacture until acceptable samples have been lodged.

Vibration shall not be applied by way of reinforcement. Therefore contact with the reinforcements and all inserts shall be avoided as far as possible.

2.3.6.12 Construction Joints in Concrete

Concreting shall be carried out continuously up to the locations where joints are shown on the Contractor's working drawings or up to approved or directed locations. The method adopted for forming such joints and unforeseen joints shall be one of the following:

General Preparation: Joints when concrete is less than 24 h old. The surface of the concrete shall be water jetted to expose the aggregate.

Joints when concrete are more than 24 h but not more than 3 d old. The surface of the concrete shall be sandblasted or chipped with a light hammer to expose the aggregate.

Joints when concrete are more than 3 d old. The procedure specified in (b) below shall be followed.

Preparation before placing concrete:

a) Joints when concrete are less than 24 h old. The surface of the concrete shall be swept clean and immediately before placing the concrete wetted but without pools of water.

b) Joints when concrete are more than 24 h but not more than 3 d old. The surface of the concrete shall be swept clean, and thoroughly wetted but without pools of water.

c) Joints when concrete are more than 3 d old. The procedure specified in (b) above shall be followed, except that the old surface shall be kept continuously wet for at least 24 h before the new concrete is placed.

2.3.6.13 Curing and Protection of Concrete

The Contractor shall, until it has thoroughly hardened and for not less than 7 days, protect the concrete from the harmful effects of frosts, wind, sun, high or low temperature, variation or reversal of temperature gradient, premature loading, deflection or impact, and aggressive groundwater. The protruding steel shall be kept cool.

Unless otherwise approved by the Engineer, exposed concrete surfaces shall be kept continuously moist for not less than 7 days after casting in the case of Portland and sulphate resisting cement concretes. Immediately upon exposure, surfaces shall be covered with a thick layer of hessian or sand or other material as may be approved by the Engineer, which shall be in continuous contact with the concrete and kept wet to the satisfaction of the Engineer; the Contractor shall make special provision to the satisfaction of the Engineer for the supervision of wetting concrete which incorporates other authorised types of cement.

If curing membranes are proposed by the Contractor and approved by the Engineer, they shall be applied in conformity with the manufacturer's instructions. They shall be applied to unshuttered surfaces within one hour of concrete deposition and shall incorporate aluminum or other approved reflecting agent. Surfaces with applied curing membrane shall be shaded from the sun, unless otherwise approved.

Curing membranes shall not be applied to construction joints.

Concrete curing compound for structures shall be a liquid resin or wax resin base membrane curing compound of a proprietary brand and shall contain a fugitive dye.

Test certificates, prepared by an approved testing laboratory, shall be supplied by the Contractor to show that the compound complies with the curing efficiency.

2.3.6.14 Concrete surfaces

Surfaces of concrete not finished against forms or ground surfaces shall be finished to the following classes.

Type UI - This finish is for surfaces where a superior finish is not required. It is also the first stage for finishes U2 and U3. The finishing operations shall consist of grading, tamping, and screening the concrete to produce a uniform, plain, or ridged surface.

Type U2 - This is a smooth matt finish such as may be achieved by a wood trowel, as required, inter alia, to receive mastic paving, block or tile paving bedded in mastic or screeds. Smoothing shall be done only after the concrete has hardened sufficiently, and may be by hand or machine. Care shall be taken that the concrete is worked no more than is necessary to produce a uniform surface free from marks.

Type U3 - This is a smooth steel-trowelled finish for surfaces of concrete pavings, tops of walls, copings and other members exposed to weathering or water, surfaces to receive thin flexible sheet, tile paving bedded in adhesive, and seatings for bearing plates and the like where the metal is in direct contact with the concrete. Trowelling shall not commence until the moisture film has disappeared and the concrete hardened sufficiently to prevent excess laitance from being worked to the surface. The surfaces shall be trowelled by hand or machine under firm pressure and left free from trowel marks.

If no Class of Finishes has been specified in the BOQ or Technical Drawing, Class of finishes U2 shall apply.

2.3.6.15 Watertight concrete

Each section of the Works that is required, to hold or exclude water shall be watertight, and special care, particularly at construction joints, shall be taken by the Contractor to ensure water tightness. Should any such section of the Works fail to pass the tests for water tightness as required as per the Technical Specification or as ordered, or show any sign of water leakage or penetration after being taken into use shall be repaired as per the instruction of the Engineer at the cost of the Contractor. If the problem persists, the structure shall be deemed defective and demolished and replaced with proper one.

Government of Nepal
Ministry of Infrastructure Development
Department of Water Supply and Sewerage Management
Water Supply and Sewerage Management Office
Ataria, Rupandehi

Office Chief

2.3.6.16 Concrete in wet ground

The Contractor is to provide a dewatering system on own cost which ensures when concrete is placed there is not surface water and the ground provides suitable working condition.

2.3.6.17 Grouting

Where it is required to grout holding-down bolts, or to place grout under column bases or bedplates for equipment, the Contractor shall first prepare the relevant concrete surfaces by scrabbling and cleaning them. The grout shall consist of an approved premixed grout mixture of cement, sand, water, and admixture, and shall be so rammed into each HD-bolt pocket or under each base or bedplate (as applicable) that all voids and pockets are completely filled around the bolt or between the top of the concrete and the underside of the metalwork, and, in the case of a base or a bedplate, that the grout projects beyond the base or bedplate. After the void has been completely filled, the edges of the mortar grout shall Be trimmed at an angle of 45^0 outward from the bottom edges of each base or bedplate and the trimmed edge wood-floated to a neat finish.

2.3.6.18 Concrete pumping

Where approved by the Engineer, the Contractor may use a suitable concrete pump for transporting the concrete from the batching equipment or transport vehicle to the point where it is to be deposited, in which case the specified mix proportions shall be adjusted and agreed with the Engineer at the time of submission of the relevant method statement. The concrete shall be fed directly from the batching equipment or transport vehicle into the hopper of the pump. Once concreting has commenced the rate of the flow and mixing must be such as to ensure continuous movement of the concrete in the pipe work, which shall have as few bends as possible. Frequent slump tests (e.g. in accordance with BS 1881) shall be carried out at the delivery end to ensure the consistency and workability at the point of placing. All equipment must be thoroughly cleaned at the end of each operation.

2.3.6.19 Defects

The concrete shall be homogeneous and free from honeycombing, interstices, and planes of weakness. If, after removal of the forms, the concrete shows any defect, the Contractor shall immediately report such defect to the Engineer, and he shall not carry out any patching or remedial work until authorized to do so by the Engineer.

After thorough inspection and investigation of the quality and strength of the defective work and after due consideration of the possible consequences of such defect, the Engineer will either specify the extent and method of repair or order the demolition and reconstruction of the whole of the defective work to the extent that he considers necessary.

The cost of all such investigation, repair, and remedial work and of any demolition and reconstruction of defective work shall be borne by the Contractor and all repair, remedial, and reconstruction work shall be executed to the satisfaction of the Engineer.

Finished concrete shall have a neat, smooth, even, and uniform finish free from any honeycombing. If the finish of any formed or floated concrete surface is, to the opinion of the Engineer, unsatisfactory and does not conform to that specified, the Contractor will be required, at his own expense, to rub down such surface while it is still green, or, alternatively, to grind it down with Carborundum or other suitable material when it has hardened or to take other approved measures to give the specified finish.

For precast elements, moulds shall be removed without any shock or vibration that might damage the concrete or have any other detrimental effect on the units and on their surfaces.

2.3.6.20 Handling and erection of precast units

The Contractor shall ensure that lugs, slots, holes, etc., provided for handling units and moving them from the point of manufacture to the place where they are erected, are adequate, and are so arranged that excessive stresses do not occur in any unit during handling, movement, or erection. Without the Contractor's responsibility being limited in any respect, the position of lifting and supporting points, the method of lifting, and the type of equipment and transport used shall be subject to approval by the Engineer.

The Contractor shall place indelible identity, location, and orientation marks on each unit, as and where necessary.

Packing pieces shall be such that they do not discolour or otherwise permanently damage the units.

Precast units shall be so stacked that the accumulation of trapped water and dirt is prevented, that, in the case of small units, deformation is minimized during the curing process, and that large units have complete freedom of movement during the curing process.

The method of assembly and erection agreed to with the Engineer shall be adhered to on the Site. Immediately after the unit is in position and before the lifting equipment is removed temporary supports or temporary connections between units shall be provided as necessary. The final structural connections shall be completed as soon as is practicable.

Government of Nepal
Ministry of Infrastructure Development
Department of Water Supply and Sewerage Management
Water Supply and Sewerage Management Office
Office Chief

2.3.6.21 Joint Sealers

The Contractor shall construct recesses at all joints and on both faces of the concrete work except on the underside of ground slabs. The recesses shall be accurately formed to the lines and dimensions shown on the Drawings or as agreed with the Engineer.

The Contractor shall prepare the surfaces of the recess, prime if necessary and shall apply a joint sealer and fill or caulk the recess completely with it.

Joint sealing shall not be commenced without the approval of the Engineer. In reservoir joints the sealer shall be applied after the construction of the reservoir roof.

Sealants shall be installed in strict accordance with the manufacturer's instructions. De-bonding strip shall be used in conjunction with the sealers as indicated on the Drawings. The de-bonding strip shall be compatible with the joint sealer and shall be resistant to attack from the primer used to bond the sealer to the concrete.

Polysulphide and polyurethane sealers shall not abut bituminous sealers. Surfaces to receive polysulphide and polyurethane sealers shall be kept free from bituminous paints.

All sealers shall be appropriate for the prevailing climatic conditions.

2.3.6.22 Concrete for benching

Concrete for benching in manholes and similar structures shall consist of Grade M15 concrete unless otherwise specified. It shall be placed with low workability to the approximate shape required, and, while still green, shall be finished with not less than an average of 20 mm of cement screed to a steel trowelled finish and to the contours indicated on the drawings.

2.3.6.23 Records

The Contractor shall maintain written records that provide the following information:

a) the date on which each section was concreted
b) the position of the section within the Works
c) the time taken to place the concrete
d) the daily weather conditions
e) the nature of samples taken and the dates they were taken
f) the curing history
g) the date of removal of formwork
h) the grade of concrete

A written record of the concrete works shall be made each day by the Contractor and kept available for inspection by the Engineer. The diary shall contain notes and records of:

(a) The names of the Contractor's engineers who are responsible for the different phases of the concrete work, and also the names of their assistants.
(b) The temperatures of air, water, cement, aggregates and concrete, together with the air humidity and type of weather.
(c) Deliveries to the Site of concrete materials (quantity, brand of cement, etc.).
(d) Inspections carried out, tests performed, etc. and their results.
(e) Times of commencement and completion of different parts of the concrete works, and times of erection and striking of forms.
(f) Quantity of cement, fine and coarse aggregate and admixture used for each section of work, and the number and kind of test samples taken on these ingredients and water.

2.3.7 Tolerances

2.3.7.1 General

Permissible deviations (PD) appropriate to the degree of accuracy will be applied to linear dimensions, position, plumb (verticality), level, squareness, and bow.

Where precast units are to fit on between cast-in-situ concrete units, the tolerances applicable to the cast-in-situ concrete shall be compatible with the tolerances applicable to the precast units.

The Degree of Accuracy may be one of the following:

a) Degree of Accuracy III for use where a high degree of accuracy is unnecessary, e.g. mass foundations, Finish classes F1 and U1.

b) Degree of Accuracy II for what is normally considered "good work" Finishes F2 and U2.

c) Degree of Accuracy I where the use of special, as opposed to normal, methods or materials (or both) is warranted, e.g. prefabricated units or where such are to fit in. Finishes class F3 and U3.

Deviations will be measured as set out below:

a) Any deviation from flatness of a plane surface will be measured as the maximum deviation of the surface from any straight line of length 3 m joining two points on the surface, determined by means of a straight-edge the ends of which are supported on identical blocks of suitable thickness placed over each of the points.

b) Any abrupt change in a continuous surface, including a local depression or peak in a floor or wall and any abrupt change caused by a joint in formwork will be measured as specified in (a) above.

c) Out-of-squareness of a corner or an opening or an element such as a column will be measured by taking the longer of two adjacent sides as the base line, and determining any departure from the perpendicular of the side at either end of the base line.

2.3.7.2 Permissible Deviations

If no Degree of Accuracy is specified in the BOQ or Technical Drawing or Technical Specification, Degree of Accuracy II shall apply.

The Permissible Deviations are:

a) for the Degree of Accuracy III:

(i) reinforcement

Spacing between two adjacent bars ± 25 mm
location of ends of bars± 40 mm
Cover to reinforcement- 0, + 20 mm

(ii) foundations

position in plan from grid or center line± 50 mm
linear dimension in plan cast against excav.± 60 mm
linear dimension in plan cast against formw.± 30 mm
level of underside of concrete - 40,+ 20 mm
surface level- 30, +15 mm

(iii) elements above foundation

Position in plan from grid or centre line± 25 mm
linear dimensions± 30 mm
Cross-section dimension- 10, + 20 mm
Level of any element or component- 20, + 10 mm
plumb, per meter of height5 mm
plumb, maximum of any point, at any height70 mm
out-of-squareness, for short sides <0.5 m ± 10 mm
out-of-squareness, for short sides < 2.0 m± 20 mm
out-of-squareness, for short sides < 4.0 m± 25 mm
flatness of or abrupt changes in exp. surface 10 mm
flatness of surface to be plastered15 mm
abrupt changes in surfaces to be plastered 10 mm
cover to reinforcement0 mm
location in plan or elev. of HD-bolts± 5 mm
constituents in the concrete mix± 5 %

b) for the Degree of Accuracy II:

(i) reinforcement

spacing between two adjacent bars± 20 mm
location of ends of bars± 30 mm
cover to reinforcement- 0,+ 15 mm

(ii) foundations

position in plan from grid or centre line± 35 mm
linear dimension in plan cast against excav.± 40 mm

Office Chief

linear dimension in plan cast against formw.± 20 mm
level of underside of concrete- 30,+ 15 mm
surface level- 20,+ 10 mm

(iii) elements above foundation

position in plan from grid or centre line± 15 mm
linear dimensions± 20 mm
cross-section dimension- 5, + 10 mm
level of any element or component- 15, + 5 mm
plumb, per metre of height4 mm
plumb, maximum of any point, at any height50 mm
out-of-squareness, for short sides <0.5 m± 5 mm
out-of-squareness, for short sides <2.0 m± 15 mm
out-of-squareness, for short sides <4.0 m± 20 mm
flatness of or abrupt changes in exp. surface 5 mm
flatness of surface to be plastered10 mm
abrupt changes in surfaces to be plastered 5 mm
cover to reinforcement0 mm
location in plan or elev. of HD-bolts± 3 mm
constituents in the concrete mix± 5 %

c) for the Degree of Accuracy I:

(i) reinforcement

spacing between two adjacent bars± 15 mm
location of ends of bars± 20 mm
cover to reinforcement- 0,+ 10 mm

(ii) foundations

position in plan from grid or centre line± 20 mm
linear dimension in plan cast against excav.± 20 mm
linear dimension in plan cast against formw.± 10 mm
level of underside of concrete- 20,+ 10 mm
surface level- 10, + 5 mm

(iii) elements above foundation

position in plan from grid or centre line± 5 mm
linear dimensions± 10 mm
cross-section dimension± 5 mm
level of any element or component- 10,+ 0 mm
plumb, per metre of height2 mm
plumb, maximum of any point, at any height30 mm
out-of-squareness, for short sides <0.5 m ± 3 mm
out-of- squareness, for short sides <2.0 m± 10 mm
out-of-squareness, for short sides <4.0 m± 15 mm
flatness of or abrupt changes in exp. surface 30 mm
flatness of surface to be plastered5 mm
abrupt changes in surfaces to be plastered3 mm
cover to reinforcement0 mm
location in plan or elev. of HD-bolts± 1.5 mm
constituents in the concrete mix± 5 %

d) for precast beams the deviation from the intended line measured on a part of or on the overall length of the beam shall not exceed 3 mm for the length of up to 3 m, and for each additional meter in length a deviation of 1 mm will be allowed up to a maximum of 10 mm. In addition, the rate of deviation from the intended line shall not exceed 1:300.

Government of Nepal
Ministry of Infrastructure Development
Department of Water Supply and Sewerage Management Office
Water Supply and Sewerage Management Office
Butwal, Rupandehi
Office Chief

2.3.8 Tests and Acceptance

2.3.8.1 Facilities and frequencies of sampling

For the purposes of taking samples and carrying out tests, the Engineer shall have free access to the Works and the Contractor shall provide all equipment required for the sampling (e.g. cones, moulds) as specified and render any assistance necessary. If so required, the Contractor shall provide storage and protection for such samples on the Site.

While concrete of a particular grade is being placed under the same conditions, sets of samples (each sample being sufficient for 3 cubes) shall be taken.

The sets of samples shall be taken as close as is practicable to the start of placing and at appropriate intervals thereafter, or from one particular batch and then from subsequent batches chosen at appropriate intervals.

At least one set of samples shall be taken from each day's casting and from at least every 90 m3 of concrete of each grade placed.

Only one sample shall be drawn from any one batch of concrete, and, except where otherwise ordered, no sample shall be taken of any grade until at least 3 batches of such grade have been mixed and discharged.

2.3.8.2 Testing

All testing shall be carried out in accordance with the relevant applicable standards or as directed by the Engineer.

The Contractor shall ensure that Site testing is carried out by a competent technician or by a person deemed by the Engineer to be sufficiently experienced.

The Contractor shall ensure that laboratory testing is carried out by a recognized testing institution or an approved laboratory or a firm approved by the Engineer.

Where early-strength testing is desired by the Contractor (e.g. for determination of the seven day strength), plans for such testing and interpretation of results shall be as agreed between the Contractor and the Engineer. As a general guide the seven day strength may be considered to be the 28 day strength divided by 1.4.

2.3.8.3 Acceptance criteria for designed mix concrete

Of the three cubes made from each sample of fresh concrete in accordance to IS: 516 -1959 or BS 1881, one will be crushed at 7 days and the other two at 28 days. The average of the two 28-day strengths will be taken as the test result. Compliance with the specified strength requirements shall always be judged on the 28-days' test results.

Concrete shall be considered to have failed to comply with the Specification:

(a) if a test result is less than the minimum specified in to IS: 516 -1959 or BS 5328 for that class of concrete, in which case the concrete which it represents shall be broken out and disposed of away from the Site by the Contractor unless at his sole discretion the Engineer approves otherwise .

(b) if the average of four consecutive test results for that class of concrete shall have failed to exceed the minimum mean of 4 as specified in to IS: 516-1959 or BS 5328 in which case no further concrete of that class shall be placed in the Permanent Works until the Contractor shall have discovered the cause of such failure and rectified it to the satisfaction of the Engineer.

If a mix fails to achieve the requirements for fresh concrete the batch shall be rejected and no further concrete of that class shall be placed in the Permanent Works until the cause of failure has been rectified.

If test results for strength of concrete of any class are consistently and significantly in excess of the target mean strength the Engineer may on the application of the Contractor agree to a reduction in the cement content in the mix for that class, provided the cement content is not lowered below the minimum specified for that class, nor the maximum water/cement ratio exceeded.

If, after evaluation of the test results an examination of the concrete in the structure is indicated, one or more of the procedures in the sequence given below may be adopted at the discretion of the Engineer to determine the acceptability or otherwise of concrete in particular sections of the structure:

a) An assessment of the stress level in the structure concerned in relation to the test result obtained

b) non-destructive testing, subject to similar concrete of proved acceptable quality being available in comparable members in the same construction as a reference (impact hammers and ultrasonic testing are two examples of such test techniques that may be used, provided the apparatus has been previously calibrated)

c) the testing of drilled cores in accordance with relevant applicable standards under terms and conditions agreed upon between the Engineer and the Contractor.

Where load tests are, in the opinion of the Engineer, unsuitable or impractical, and if an examination described above does not show the concrete strength to be acceptable, or if a portion of the structure fails to pass the test, the Contractor

shall, on the instructions and directions of the Engineer, either replace or strengthen by approved means: each section of the structure that failed or contains concrete that failed, as relevant, and any section, irrespective of strength, the functional purpose of which is affected by the a failed section or failed concrete.

The Contractor shall bear the cost of any replacement or strengthening referred to above as well as any other remedial measures that may be ordered to restore the durability of the concrete to that achievable by concrete of the strength required in terms of the specification.

2.3.8.4 Individual Load Tests on Precast Units

If so directed by the Engineer, the unit to be tested shall be supported at its designed points of support and loaded for 5 min with a load equal to the sum of the characteristic dead load plus 1.25 times the characteristic imposed load, and the deflection shall then be recorded. The maximum deflection measured after application of the load shall be checked for compliance with the applicable requirements of the relevant applicable standards.

The recovery shall be measured 5 min after the removal of the applied load and the load shall then be re-imposed. The percentage recovery after the second loading shall be at least equal to that determined after the first loading and at least 90 % of the deflection recorded during the second loading. At no time during the test shall there be, in the opinion of the Engineer and in the light of a reasonable interpretation of the relevant data, any sign of weakness or faulty construction in the unit under test.

If destructive tests for beam units are ordered, the unit to be tested shall be supported at its design points of support, and loaded to its ultimate design load. The unit shall not fail within 15 min after the application of the test load. A deflection exceeding 1/40 of the span shall be regarded as failure of the unit.

For units not amenable to the tests described above, details of the testing arrangements shall be agreed between the Engineer and the Contractor before such units are cast.

2.3.9 Measurement and Payment if not otherwise specified in the BOQ.

2.3.9.1 Formwork

Formwork will be measured as the net area of the face of the concrete. No deduction will be made for fillets and splays of size up to 100 x 100 mm or for openings of diameter up to 0.7 m or of area up to 0.5 m2.

Formwork in continuous lengths of narrow width of up to 300 mm will be measured by length, the width, or range of width being stated in the schedule.

Separate items will be scheduled

a) for each class of finish required
b) for the different angles of inclination of formwork as given below:
   (i) horizontal: >85^0 up to 95^0
   (ii) sloping: >10^0 up to 85^0
   (iii) battered up to 10^0
   (iv) vertical: 0^0
c) for each type of structural element, such as walls, beams, slab, etc.
d) for formwork to curved surfaces

No payment will be made for formwork used in forming designated and construction joints.

2.3.9.2 Reinforcement

Steel for reinforcement will be measured net by mass of all bars, including supporting steel detailed on the bending schedules. No allowance will be made for cutting, waste, spacer devices, or binding wire.

Welded mesh will be measured by area to be reinforced by means of mesh, no allowance being made for cutting, waste, laps, or deductions for end cover.

Steel offcuts resulting from the cutting and bending of reinforcing steel in accordance with the bending schedule shall be deemed to be the property of the Contractor.

2.3.9.3 Concrete

The volume or area of concrete, in which unit the payment is intended, will be computed from the measurements net to the dimensions shown on the drawings or to the dimensions cast, whichever is the smaller. Structural elements that are undersized will be measured for payment only if they are accepted by the Engineer.

No allowance will be made for concrete required to make up overbreak in soft excavation, but payment will be made for additional concrete or formwork, ordered in writing by the Engineer to replace unsuitable material or overbreak in hard rock or in intermediate excavation.

Sub-foundation carpets and blinding layers will be measured to the plan size of the concrete structure resting on it and the thickness shown on the drawings, and measured on the mean thickness as cast, provided that the Engineer is satisfied that the excavation has not at any point been taken deeper or wider than necessary.

Separate items will be scheduled, as applicable, for each type and each grade of concrete, for each unit or element in the structure (where these would materially influence the pricing), such as

a) slabs that are horizontal, sloping, conical or of different thickness
b) concrete deposited under water
c) small quantities each less than 0.20 m3 of formed surfaces, and
d) different surface finishes, other than just striking-off and levelling.

No separate payment will be made for curing, sampling of testing.

2.3.9.4 Miscellaneous Items

Only designated joints shall be measured. Unless otherwise provided in the Contract, joints will be measured per linear m for joints in slabs and horizontal and vertical joints in walls. The rate shall include waterstops, formwork to form the joint, forming a recess for the joint sealer and application of the joint sealer.

Waterproof membrane and rubber gasket shall be measured as the plan area of the roof slab covered with the membrane. The rate shall include upstands at the perimeter and solar protection of the perimeter.

Bitumen painting is measured as the surface area covered by the painting.

Government of Nepal
Ministry of Infrastructure Development
Department of Water Supply and Sewerage Management Office
Water Supply and Sewerage Management
Butwal, Rupandehi

Office Chief

2.4 Brickworks

2.4.1 Scope

This specification covers the general construction requirements for brickwork in general Masonry, Pavement, Drain Section, Manholes, Chambers, Buildings, Reinstate of Brickwork, Walls, and other brick related structures.

2.4.2 Interpretations

2.4.2.1 Supporting Specifications

The following specifications shall, inter alia, form part of and shall be read in conjunction with this specification:

a) 1 General
b) 2.1 Site Clearance
c) 2.2 Earthworks
d) 2.3 Concrete Works, as applicable

2.4.2.2 Application

This specification contains clauses that are generally applicable to brickwork construction and associated work.

2.4.3 Materials

2.4.3.1 Bricks

Unless otherwise specified, burnt-clay bricks shall confirm to the requirement of IS: 1077-1992. Specification for common Burnt Clay Building Bricks, and shall be first class quality (Class `A').

Bricks should be obtained from an approved manufacturer and should be approved by the Engineer. The Contractor shall submit to the Engineer samples of the bricks that he intends using in the construction of the different sections of the Works. The samples of the bricks that are approved will be retained by the Engineer.

Bricks shall be free from defects affecting strength and durability. The amount and extent of manufacture cracks or cracks and chips due to handling shall not be to such a degree as to give an unsightly appearance to exposed brick surfaces and all face brick to be used on the Work shall match with the samples approved by the Engineer.

All bricks shall be machine made, of good quality brick earth and thoroughly burnt, and shall be of deep cherry red or copper color. The bricks when dried shall emit a clear ringing sound when struck together and shall not break when thrown on the ground or against other bricks from a height of 1 m. The bricks shall not absorb water more than one sixth of their weight after one hour of soaking by immersion in water. The bricks shall be wholly clean and free from flaws, cracks, and under-burnt lumps of any kind. They shall be uniform in size and regular in shape and have square, straight, and sharp edges and even surfaces.

Bricks shall be carefully handled at all stages in delivery, stockpiling, transportation on Site and construction to prevent breakage or surface damage. Bricks shall be carefully unloaded by hand and shall not be dumped or thrown. They shall be stocked in regular layers even as they are unloaded. The supply of bricks shall be arranged so that at least one weeks requirement of bricks are available at the site at any time.

2.4.3.2 Hollow concrete blocks

The hollow concrete blocks for masonry works shall be machine made and thoroughly compacted in the moulds by external form vibrators or vibrating tables.

Unless otherwise specified in drawing and BOQ, the hollow concrete blocks shall be made of 1 part of cement, to 4 parts of well graded fine and coarse aggregates mechanically mixed into a very dense and dry consistency with very low water cement ratio.

The hollow concrete blocks shall comply with NS 119-2042 and shall have following physical properties.

a)	Compressive Strength	70 kg/cm2
b)	Drying Shrinkage	0.04%
c)	Moisture Movement	0.03%
d)	Water absorption	240 kg/m3
e)	Moisture content	40%

2.4.3.3 Cement for mortar

Cement for masonry mortar and grout shall be ordinary Portland cement in accordance with the requirements of Clause 2.3.3.2. All cement for mortar for exposed face work shall be of a uniform color as approved by the Engineer.

Government of Nepal
Ministry of Infrastructure Development
Department of Water Supply and Sewerage Management
Water Supply and Sewerage Management Office
Kathmandu
Office Chief

2.4.3.4 Sand for mortar

Sand (fine aggregate) for masonry mortar and grout shall be in accordance with the requirements of IS 460-1962. For exposed face work shall be of a uniform color as approved by the Engineer. The particle size grading of sand for use in mortars for masonry work shall be within the limits specified in Table 2.8.

Table 2-6: Requirement of Grading of Sands for Masonry Work

IS Sieve Designation (IS 460-1962)	Percentage of Weight Passing IS Sieve
4.75mm	100
2.36 mm	90-100
1.18 mm	70-100
600 Micron	40-100
300 micron	5-70
150 Micron	0-15

Sand shall be clean pit sand and shall be free from clay and other impurities and, if so directed, shall be properly screened and washed.

2.4.3.5 Water for mortar

The water used for mixing and curing shall be clean and free from injurious amounts of oils, acids, alkalis, salts, sugar, organic materials or other substances that maybe deleterious to concrete or steel. Portable water shall be generally considered satisfactory for mixing of mortars. The quality of water shall correspond to IS: 456 - 2000 (Clause 5.4).

2.4.3.6 Construction Equipment

The Contractor is responsible for providing, erecting, dismantling, and removing safe and adequate lifting equipment and scaffolding where required.

The type and capacity of mixing machines shall be such that the rate of output of mortar is suitable for the rate of brickwork. Each machine shall be capable of producing a uniform distribution of the ingredients throughout the batch and shall comply with the specification to which the manufacturer claims it has been manufactured. Worn or bend blades and paddles shall be replaced. The inner surfaces of the mixer shall be clean and free from hardened mortars. The mixers used shall be specially suited to the production of low slump mortars.

The Contractor is responsible for providing, erecting, dismantling, and removing safe and adequate lifting equipment and scaffolding where required at his own cost.

2.4.4 Construction and Workmanship

2.4.4.1 Mortar

Cement and sand shall be mixed in specified proportions given on the drawings or BOQ. Cement shall be proportioned only by weight, by taking its unit weight as 1440 kg per cubic meter and the sand shall be proportioned by volume after making due allowance for bulking. The required quantity of water shall then be added and the mortar mixed to produce workable consistency.

Necessary tests to determine compressive strength of the mortar, for consistency of the mortar and its water retentivity shall be carried out in accordance with IS: 2250 -1981. The frequency of testing shall be one cube for every 2 cubic meter of mortar prepared subject to a minimum of 3 cubes for a day's work.

2.4.4.2 Workability of mortar

The mortar shall be of a readily workable consistency with only enough water to obtain a plastic condition suitable for troweling.

2.4.4.3 Workability of grout

Grout shall be of pourable consistency with a slump of 120 mm when tested in accordance with the standard slump test for mortar and grout.

2.4.4.4 Cement mortar mixing and using period

All cementing material and aggregates shall be mixed for a minimum of 2 min in a mechanical batch mixer. Only so much water shall be added as is compatible with convenience in using the mortar. If mortar begins to stiffen from evaporation or absorption of a part of the mixing water, the mortar shall be re-tempered by adding water and remixed. All mortar and grout shall be used within 2.5 h of the initial mixing and no mortar or grout shall be used after it has begun to set.

2.4.4.5 Mixing of mortar

The mixing shall be done intimately in a mechanical mixer unless hand-mixing is specifically permitted by the Engineer. If hand-mixing is done, the operation shall be carried out on a clean watertight platform, and cement and sand shall be first

mixed dry in the required proportion to obtain a uniform color and then the mortar shall be mixed for at least two minutes after addition of water.

In case of cement mortar, that has stiffened because of evaporation of water, it shall re-tempered by adding water as frequently as needed to restore the requisite consistency but this retempering shall be permitted only within thirty minutes from the time of addition of water at the time of initial mixing.

Necessary tests to determine compressive strength of the mortar, for consistency of the mortar and its water retentivity shall be carried out in accordance with IS: 2250. The frequency of testing shall be one cube for every 2 cubic meter of mortar prepared subject to a minimum of 3 cubes for a day's work.

2.4.4.6 Brick laying

All brickwork shall be placed only after the foundation surfaces have been prepared to the satisfaction of the Engineer.

Bricks shall be well soaked in water for a minimum of 3 h immediately before being laid or as required so that the rate of absorption when laid does not exceed acceptable limits approved by the Engineer. The method of wetting shall be such that each brick shall be nearly saturated but the surface appears dry when laid.

Bricks shall be laid in running bond with head joints in each course centered over the bricks in the course below and shall be plumb, level & true to line with full head and bed joints. The ends of brick shall be buttered with sufficient mortar to fill the head joints.

Joints in brickwork shall be uniform and generally 10 mm thick for horizontal and 6 mm wide for vertical joints. Joints shall be tooled to produce a dense V-shaped joint or as otherwise ordered by the Engineer or shown on the drawings. Defective joints shall be cut out and repointed with mortar as directed by the Engineer.

The color and texture of all exposed mortar joints shall be subject to the approval of the Engineer and shall be kept uniform throughout the particular contract by strict adherence to the approved mixes and samples.

Extreme care shall be taken to prevent any concrete, grout, or mortar from staining the face of masonry. If any grout or mortar does contact the face it shall be immediately removed and the surface cleaned with clean water. Masonry work shall be protected against staining, tops of walls shall be covered with waterproof coverings as required, and when work is interrupted.

All walls shall, to the extent possible and as practicable, be built up at the same time. In no case shall any walls be advanced more than 1.5 m above another. If it is necessary to stop off a horizontal run of masonry, the end shall be stepped or as otherwise approved by the Engineer.

Where mortar on joints has partially or totally set, the exposed surface shall be cleaned and thoroughly wetted so as to obtain the best possible bond with the new work. All loose masonry and mortar shall be removed prior to the commencement of the work.

Brickwork shall be taken up truly plumb and each set of four bricklayers shall be provided with a plumb bob and straight edge.

Bricks on the 'fair face' shall be the best available, care being taken that they are not chipped or stained as work proceeds. Bricks shall be laid so as to give a perfectly flat face as tested with a straight edge, and no chipping or rubbing back will be permitted to remedy bad laying.

In the event of fair faced brickwork not being finished with struck joints whilst the mortar is still damp, pointing may be carried out with the approval of the Engineer. In this case all joints shall be raked out to a depth of 20 mm, cleaned free from all loose material and any putlogs filled in. The area to be pointed shall then be thoroughly soaked before pointing takes place, the mortar used being to the satisfaction of the Engineer.

Care shall be taken to keep all brickwork free from mud splashing, mortar, bitumen droppings, etc., and it shall be well cleaned down before being handed over.

If, after the completion of brickwork construction, any of it is found to be out of alignment or level or otherwise not conforming with the permissible deviations specified or otherwise defective, it shall be removed and replaced or repaired by the Contractor, at his own expense, and to the satisfaction of the Engineer.

2.4.4.7 Half brick thick wall and Curtain Walls

Two bars of 6 mm diameter shall be used longitudinally at every 5th course of half brick thick wall brick work. The first reinforcement shall be placed on the top of the bottommost course. The bars shall be fully embedded in the mortar and the ends shall be properly bonded in the vertical joints of brick work or to the main wall as directed by the Engineer. Laps for the reinforcement shall be provided of minimum length of 45 times the diameter of bar.

Top and ends of full height partition walls (half brick or single brick) shall be securely fastened to beams, slabs, columns, and walls, as applicable, with pre-fixed metal fasteners or holdfasts spaced not greater than 75cm apart unless otherwise

indicated. Clearance between top and ends of partition wall and beams, slabs, columns, and walls shall be caulked as indicated or as directed by the Engineer to form a closed continuous joint.

Office Chief

2.4.4.8 Exposed Brick Work

a) The exposed brick work shall be specially selected for uniformity of size, color, and shape. All faces of the bricks shall be truly plane and rectangular all corners exactly 900 and all bricks identical in size. There shall be no cracks or flaws in the bricks. The finished surface shall give a uniform and pleasant appearance. The exposed brick work shall have 8 mm deep recessed pointing at joints.

b) The brick walls for exposed brick work shall be of composite bricks with selected bricks for exposed face and routing bricks for inner face. This shall be done in a proper way to ensure proper bond. Mortar, etc. shall be the same as specified for brick work.

c) All exposed brick work, at the final completion or when it is so directed by the Engineer shall be rubbed with carborundum stone, washed down, cleaned, in extreme cases, a 5% solution of neurotic acid may be used for cleaning of exposed brick work, but it shall be proceeded and followed by a copious bath of fresh, clean water.

d) Exposed faces of brick masonry shall be kept moist for 10 d after laying

2.4.4.9 Brick manholes / Chambers

Brick walls for manholes or chambers shall be constructed in an approved bond comprising header and stretcher courses with the fair face on the inside. No false headers shall be built in and only whole bricks shall be used except where closures are required to form bond.

Joints shall be flushed up solid at every course throughout the whole width of each course, which shall be laid on a solid bed of mortar of thickness not exceeding 10 mm, and, if plaster is required, the joints shall be raked out to form a key as the work proceeds for the extent of the area to be plastered.

The walls of a manhole, if so required in terms of the Drawings shall be plastered internally and steel-trowelled to a smooth and true surface free of sharp edges and corners. The thickness of plaster shall be not less than 12.5 mm and not more than 15 mm. All salient angles and arises shall be slightly rounded, and all internal angles shall be finished true, square, and smooth.

2.4.4.10 HONEY COMB BRICK WORK

The honeycomb brick work shall be done with specified class of brick, laid in specified mortar. All joints and edges shall be struck flush to give an even surface. The thickness of the brick honeycomb work shall be half-brick only, unless otherwise specified.

Openings shall be equal and alternate with half brick laid with a bearing of 2 cm on either side.

2.4.4.11 Brick Work in Arches

The detailed specifications for brick work mentioned in earlier sub clauses of 2.4.3 shall apply, in so far as these are applicable. Arch work shall include masonry for both gauged as well as plain arches. In gauged arches, cut or moulded bricks shall be used. In plain arches, uncut bricks shall be used.

Brick forming skew-backs shall be dressed or cut so as to give proper radial bearing to the end voussiors. Defects in dressing of bricks shall not be covered by extravagant use of mortar, nor shall the use of chips or bats etc. be permitted.

2.4.4.12 Brick Pavement

The brickwork in paving shall be laid in 1:4 cement mortar and be made with machine made bricks, and shall be laid to the specified slopes, levels, dimensions, pattern, and bonds as shown in the drawing or as directed by the Engineer.

The widths of mortar joints shall not exceed 12 mm and shall be fully packed with mortar. The brick pavement shall be laid over a layer of mortar of 12 mm thickness, and shall not be disturbed at least for 7 d after it has been laid and shall be kept wet for at least 10 days.

2.4.4.13 Brick Soling

All the excavated materials shall be cleaned out properly and the base shall be rammed properly before the soling work is proceeded. Foundation shall be checked so that it is in exact line and dimensions.

Unless specified elsewhere or otherwise directed, dry brick soling in foundations and under flooring shall be laid flat or edge over a compacted surface as required, and be made of machine made bricks as specified above. The dry brick soling shall be laid over a cushion of sand of 25 mm thickness unless otherwise shown on the drawings or directed by the Engineer. All joints shall be completely filled with fine sand.

Government of Nepal
Ministry of Infrastructure Development
Department of Water Supply and Sewerage Management Office
Water Supply and Sewerage Management Office
Butwal, Rupandehi

Office Chief

2.4.5 Tolerances

The dimensions of brickwork walls and structures such as manholes shall conform to the tolerances laid down for concrete structures (as per Clause 2.3.7), as applicable, or as directed by the Engineer.

2.4.6 Measurement and Payment

All Brickwork (half or full brick) will be measured as the net volume, for the different types and thickness applicable. No deductions will be made for openings of area up to 0.2 m^2.

Unless and otherwise mentioned in BOQ, Brick soling and Brick pavement works will be measured as the net area.

In case of honey combed wall, the length, width and height shall be measured correct to a cm. Volume of wall shall be calculated in cubic metres correct to two places of decimal. Honeycomb openings shall not be deducted.

Government of Nepal
Ministry of Infrastructure Development
Department of Water Supply and Sewerage Management Office
Water Supply and Sewerage Management
Butwal, Rupandehi

Office Chief

2.5 Stone Masonry Works

2.5.1 Scope

This specification covers the general construction requirements for Stone masonry Work, Stone Pitching work, reinstate of Stone Work, Walls and other stone masonry related works.

2.5.2 Interpretations

2.5.2.1 Supporting Specifications

The following specifications shall, inter alia, form part of and shall be read in conjunction with this specification:

a) 1 General
b) 2.1 Site Clearance
c) 2.2 Earthworks
d) 2.3 Concrete Works, as applicable

2.5.2.2 Application

This specification contains clauses that are generally applicable to stonework construction and associated work.

2.5.3 Materials

2.5.3.1 Stone

Building stones to be used in the masonry shall be granite, quartize, gneiss laterite or any other type of good stones that may be specified in the item. In the absence of mention of a special type in the item or the special provision, good granite, quartize or gneiss stones in that order available and known to be satisfactory in use, in view shall be used. The stone shall stand weathering well and when immersed in water for 24 hours shall not absorb water more than 5 percent of its dry weight, when tested according to IS:1124-1974. The stone of the required quality shall be obtained from the quarries approved by the Engineer. All stones shall generally be freshly quarried.

Rubble stones for hearting shall be of approved quality, sound, hard, dense and durable, free from segregation, seams, srams, cracks, weathered- portion and other structural defects or imperfections tending to affect their soundness and strength. Stones shall be freshly quarried with sharp edges and clean faces. They shall be free from rounded, worn or weathered surfaces or skin or coating which prevents the adherence of mortar. Size and shape of stones shall be as per requirements of each item.

Stones to be used as headers, pin headers, quoin, copings etc. shall comply with the requirements of facing and hearting stones as may be relevant and shall further comply with the requirements of size and shape stipulated under the relevant item.

Samples of the stone intended for use in the work shall be submitted for the Engineer's prior approval.

Mortar: Mortar shall comply with IS 2250-1965 Code of Practice for Preparation and Use of Masonry Mortars.

2.5.3.2 Cement for mortar

Cement for masonry mortar shall be ordinary Portland cement in accordance with the requirements of Clause 2.3.3.2. All cement for mortar for exposed face work shall be of a uniform colour as approved by the Engineer.

2.5.3.3 Sand for mortar

Sand shall be in accordance with the Clause 2.4.3.4.

2.5.3.4 Water for mortar

The water used for mixing and curing shall be according to Clause 2.4.3.5.

2.5.3.5 Construction Equipment

The Contractor is responsible for providing, erecting, dismantling, and removing safe and adequate lifting equipment and scaffolding where required. The type and capacity of mixing machines shall be such that the rate of output of mortar is suitable for the rate of stone masonry work and should be as per the Clause 2.4.3.6.

The Contractor is responsible for providing, erecting, dismantling, and removing safe and adequate lifting equipment and scaffolding where required at his own cost.

2.5.4 General Construction and Workmanship

The dressing of stone shall be as specified for individual type of masonry work and it shall also conform to the general requirements for dressing of stone covered in IS: 1129 - 1972. Other specific requirements are covered separately with respect to particular types of rubble stone work.

Stones shall be sufficiently wetted before laying to prevent absorption of water from mortar. The bed which is to receive the stones shall be cleaned, wetted, and covered with layer of fresh mortar. All stones shall be laid full in mortar both in bed and in vertical joints and settled carefully in place with a wooden mallet immediately on placement so that it is solidly bedded in mortar before the has set. Clean ships and spalls shall be wedged into the mortar joints and beds wherever necessary, to avoid thick beds or joints of mortar. Whenever foundation masonry is laid directly on rock, the face stones of the first course shall be dressed to fit into the rock snugly when pressed down in the mortar bedding over the rock. No dry or hollow space shall be left anywhere in the masonry and each stone shall have all the embedded faces completely covered with mortar.

Courses of the masonry shall ordinarily be predetermined. They shall generally be of the same height. Where there is variation in the height of courses, larger courses shall be placed at lower levels, with height of courses decreasing gradually towards the top.

Vertical joints shall be staggered as far as possible.

All necessary chases for joggles, dowels and cramps shall be formed in the stones beforehand.

Sufficient transverse bond shall be provided by the use of bond stones extending from the front to the back of the masonry. In case of thick walls bond stones shall overlap each other in their arrangement.

Bell shaped bond stones or headers shall not be used.

At all angular junctions stones at each alternate course shall be well bonded into the respective course of the adjacent wall.

All connected masonry in structure shall be carried up at one uniform level throughout as far as possible, but when breaks, are unavoidable, the masonry shall be raked in sufficient long steps to facilitate jointing of new work with old. The stepping of ranking shall not be more than 45° with the horizontal. Wing walls, abutments are piers, etc., shall be carried up truly plumb or to the specified batter.

Face work and hearing shall be brought up evenly. The top of each course, however, shall not be leveled up by use of flat chips.

2.5.5 Random Rubble Masonry (Un-coursed and Coursed)

2.5.5.1 Dressing:

Stone shall be hammer dressed on the face, the sides, and beds to enable it to come in proximity with the neighboring stone. The bushing on the face shall not be more than 4 cm on exposed face.

2.5.5.2 Insertion of Chips

Chips and spalls of stone may be used wherever necessary to avoid thick mortar beds or joints and it shall also be ensured that no hollow spaces are left anywhere in the masonry. The chips shall not be used below hearting stones to bring these upto the level of face stones. Use of chips shall be restricted to filling of interstices between the adjacent stones in hearting and they shall not exceed 20 percent of the quantity of stone masonry.

2.5.5.3 Hearting Stones:

The hearting or interior filling of wall face shall consist of rubble stones not less than 15 cm in any direction, carefully laid, hammered down with a wooden mallet into position, and solidly bedded in mortar. The hearting should be laid nearly level with facing and backing.

2.5.5.4 Bond Stones

Through bond stones shall be provided in masonry upto 60 cm thickness and in case of masonry above 60 cm thickness, a set of two or more stones overlapping each other at least by 15 cm shall be provided in a line from face to back. In case of highly absorbent types of stones (porous limestone and sandstones, etc.) the bond stone shall extend only about two-third into the wall, as through stones in such cases may give rise to penetration of dampness and, therefore, for all thicknesses of such masonry a set of two or more bond stones overlapping each other by at least 15 cm shall be provided. One bond stone or a set of bond stones shall be provided for every 0.50 square metres of the masonry surface.

2.5.5.5 Quoin Stone

Quoin stone, i.e., the stone specially selected and neatly dressed for forming an internal angle in masonry work, shall not be less than 0.03 cubic meters in volume.

2.5.5.6 Plum Stone

The plum stones are selected long stones embedded vertically in the interior of masonry to form a bond between successive courses and shall be provided at about 90 cm intervals.

Government of Nepal
Ministry of Infrastructure Development
Department of Water Supply and Sewerage Management Office
Water Supply and Sewerage Management Office

Office Chief

2.5.5.7 Wet Foundation

In wet foundation, or other situation where water is met with, the work space shall be kept free of water by the Contractor while the masonry is in progress and until the Engineer considers the mortar has sufficiently set. Dewatering shall be carried out in such a way as not to injure the concrete or masonry in any way. Dewatering shall also be done when required for taking/checking measurements, approved foundations etc. Dewatering shall be included in the rate of masonry unless separate provision is made in the contract.

2.5.5.8 Laying

The masonry shall be laid to lines, levels, curves, and shapes shown in the drawing. Fixtures, plugs, frames etc. if any shall be built in at places shown on the drawing or directed by the Engineer while laying the masonry and not later by removing the stones already laid.

a) Stones in the hearting shall be laid on their broadest face which gives better opportunity to fill the space between stones.

b) Stratified stones must be laid on their natural beds. All bed joints shall be normal to the pressure upon them.

c) In weathered walls, the beds of stone and the plane of course should be at right angles to the latter.

d) The courses of masonry shall ordinarily be predetermined. They shall generally be of the same height. Where there is to be variation in height of courses, larger courses are to be placed at the lower levels, the height of courses decreasing gradually towards the top of the wall, unless to architectural requirements.

e) The stones shall be wetted before laying in mortar. Each mason shall be supplied by the Contractor with a vessel full of water and a tumbler for wetting stones, care being taken not to spill any water on green masonry. The bed which is to receive the stone shall be cleaned, wetted and covered with layer of fresh mortar. All stones shall be laid full in mortar both in place with a wooden mallet immediately on placement and solidly bedded in mortar before it has set. Clean chips and spalls, carefully selected to fit in the spaces shall be wedged into the mortar joints and beds wherever necessary to avoid thick beds or joints of mortar. When the foundation masonry is laid directly on rock the face stones of the first course shall be dressed to fit into the rock snugly when pressed down in the mortar bedding over the rock. No dry or hollow space shall be left anywhere in the masonry and each stone shall have all the embedded faces completely covered with mortar. If a portion of masonry is dismantled, every stone must be found with mortar adhering fast to all its embedded surfaces and there shall be no hollows. This will be one of the tests in deciding if the masonry is good or bad if need arises. Where hollows or other defects are suspected a stone here there may be removed for confirmation. If these are confirmed such portion shall be dismantled and rebuilt at the cost of the Contractor.

f) Face work and hearting shall be brought up evenly but the top of each course shall not be leveled up by use of flat chips.

g) In case any stone already set in mortar is disturbed or the joint broken, the stone shall be taken out without disturbing the adjoining stones and joints, the mortar thoroughly cleaned from the joints and the stone reset in fresh mortar. Attempts must never be made to slide one stone over another already laid.

h) Shaping and dressing shall be done before the stone is laid in the work. No dressing and hammering which will loosen the masonry shall be permitted after it is once placed.

i) There shall be an adequate collection of stones and spalls within easy reach of the mason to enable proper selection of stones for individual location while laying. The stones shall be continuously replenished.

j) Bond

- To give sufficient lateral bond, a stone in any course shall break joint with the stone in the course below or above about half the height of the course and generally not less than 7.5 cms.
- To give sufficient transverse bond, the prescribed number of headers shall extend from front to back of thin walls up to a width of 60 cms or prescribed number of lines of overlapping headers from face to back of walls over 60 cms thick. Over laps shall be 15 cms at each end. To ensure provision of full number of headers of the required size, they shall be kept at specified intervals in each course in advance of starting masonry and then embedded in mortar. Their position in each course shall be staggered, so that each will be near about the middle of the two in the courses below and above. Their faces shall be marked with a distinguishing sign to identify them.
- To bond work at all angle junctions of walls, the stones at each alternate course shall be so carried into each of the respective walls as to join the work thoroughly. Quoin shall be laid header and stretch wise when seen on each side of the wall.

- When new work has to be started on the old or one completed a long while ago or in the previous working season, the surface shall be roughened and cleaned satisfactorily without disturbing the masonry before laying the new. It shall be wetted before laying the bedding mortar.
- Where practicable the whole of the masonry in any structure shall be carried upto a uniform level throughout. But where breaks are unavoidable in carrying up the work continuously in horizontal courses, sufficiently long step shall be left to join the courses to be laid later. All junctions of walls shall be formed at the time the walls are being built; cross-walls should be carefully bonded into the main walls.
- The practice of building two thin faces tied with occasional through-stones and filling up middle with dry packing and putting mortar on top must be strictly guarded against putting dry chips in the joints of stones before filling them with mortar shall not be allowed.
- For ensuring good bond masonry shall be left uneven at the top of each course.

k) The face stones shall be laid absolutely without any pinnings on the exposed faces. In each course the headers or lines of headers as the case may be, shall be kept in position at specified intervals and with specified laps where such laps are required before the masonry of the layer is commenced to ensure that they are being laid properly and in required numbers and intervals. They shall be embedded in mortar as masonry in that layer progresses.

l) Joints: No face joints shall exceed 8 mm in thickness. Stones shall be arranged to break joint as much as possible and long vertical lines of jointing shall be avoided.

m) Striking Joints: The face joints should be properly struck while the mortar is fresh. Joints which cannot be struck at the time of laying, shall be prepared for it by raking joints to a depth of not less than 6 mm when the mortar is fresh. These joints should be properly cleaned of loose particles, wetted thoroughly and filled with good fresh cement mortar 1:3 and finished off by being troweled smooth.

n) Rate of raising masonry: The rate of raising random rubble masonry brought up in uniform levels may be limited to a height of 60 cm per day in cement mortar. No fresh course shall be laid over masonry previously laid within 4 hours of its laying for cement mortar.

2.5.5.9 Items to Include in the unit rate

a) Masonry built in any position to any height or depth and to lines, levels, curves and batters, shown on drawing as ordered by the Engineer with headers, quoin etc. including striking joints and curing, cutting, grooves holes etc. for fixing frames, fixtures etc. are also included in the rate.

b) Erecting and removing all scaffolding, ladders and use of plant required for execution of the item, safety of the labour and inspection of the work including compensation for any injury, damage etc.

c) Watering to allow construction in the dry and proper setting of masonry unless separately provided in the contract.

d) Clearing the site round the masonry and back filling so as to restore it to the original condition.

e) All labour, use of tools, materials and other items incidental to satisfactory completion of the item.

f) Curing of the work and protection of fresh work from dust, rain etc.

2.5.5.10 Joints

The face joints shall not be more than 20 mm thick, but shall be sufficiently thick to prevent stone-to-stone contact and shall be completely filled with mortar.

2.5.6 Dry Rubble Masonry for Retaining structures

This work shall conform to Clause 2.5.5 of Random Masonry (Un-coursed) except that:

a) the masonry shall be dry without mortar;

b) the spaces between large stones shall be filled with spalls at tightly as possible; and

c) the foundations shall be excavated at right angles to the face batter and not horizontally. The beds of the stones shall be laid at right angles to the face better.

2.5.7 Dry Stone Pitching/Dry Rubble masonry

Stone Pitching/Dry Rubble masonry shall be constructed generally to the requirements of un-coursed random rubble masonry as specified in elsewhere in this document but with the omission of mortar. All stones shall be carefully shaped to obtain as close as fit as possible at all beds and joints, any interstices between the stones being fitted with selected stone spalls. The exposed tops or cropping of dry rubble structures shall be formed as described in the Contract.

Activities involved will be supply of stones, dressed bond stone, cement, sand, water, tools, machine, preparation of mortar, placing and joining stones dry/with mortar, control, and removal of water, curing, collection, & testing of specimens etc. complete.

Government of Nepal
Ministry of Infrastructure Development
Department of Water Supply and Sewerage Management
Office
Bijuwal, Rupandehi

Office Chief

2.5.8 Stone Soling Work Blinding in Floor

The ground or earth shall be thoroughly consolidated with a 25 mm layer of coarse sand so that there is no loose pockets left anywhere in the whole area. Over such consolidated surface a layer of stone soling shall be made. Care should be taken that all stones are placed vertically. No smaller stones than 80 mm shall be provided for such work. The stone shall be thoroughly rammed as closely packed in position and interstices blinded with course sand, if necessary, so that a solid hard core of desired thickness is formed in position.

2.5.9 Measurement and Payment

Unless and otherwise mentioned in BOQ, measurement shall be made to cubic meters of any type of masonry made in accordance with authorial dimensions.

Stone soling works will be measured as the net volume.

Stone pitching works will be measured as the net area.

Government of Nepal
Ministry of Infrastructure Development
Department of Water Supply and Sewerage Management Office
Water Supply and Sewerage Management Office
Butwal, Rupandehi
Office Chief

2.6 Cement Plaster Works

2.6.1 Scope

This specification covers the general construction requirements for finishing works in any structure on exterior and interior surfaces including bed and side slopes of specified surfaces of stone pitching, brick wall, stone walls, reinstate work, and other surfaces.

2.6.2 Interpretations

2.6.2.1 Supporting Specifications

The following specifications shall, inter alia, form part of and shall be read in conjunction with this specification:

a) 1 General
b) 2.2 Earthworks, as applicable
c) 2.3 Concrete Works
d) 2.4 Brickwork
e) 2.5 Stonework

2.6.2.2 Application

This specification contains clauses that are generally applicable to finishing work and associated work.

2.6.3 Materials

2.6.3.1 Cement

Cement for finish work shall be ordinary Portland cement in accordance with the requirements of Clause 2.3.3.2. All cement for mortar for exposed face work shall be of a uniform color as approved by the Engineer.

2.6.3.2 Sand

The particle size grading of sand for plaster work for internal as well as external walls and ceiling as analyzed by the method described in IS: 2386 (Part I) -1963 shall be as specified in Table 2-7. Where the grading falls outside the limits of the grading zones of sieves other than 600 micron IS Sieve by a total amount not exceeding 5 percent, it shall be regarded as falling within the grading. This tolerance shall not be applied to percentage passing the 600 micron IS Sieve or to percentage passing any other sieve size on the finer limit. The various sizes of particles of which the sand is composed shall be uniformly distributed throughout the mass. The required grading may often be obtained by screening and or by blending together either natural sands or crushed stone screening which are by themselves unsuitable grading.

Table 2-7: GRADING OF SAND FOR FINISHING WORK

(Clause 4.1 of IS: 2386 -1963)

IS Sieve Designation (IS 460-1962)	Percentage of Weight Passing IS Sieve
10.0mm	100
4.75mm	95-100
2.36 mm	95-100
1.18 mm	90-100
600 Micron	80-100
300 micron	20-65
150 Micron	0-50

Notes:

1 For crushed stone sands, the permissible limit on 150 micron IS Sieve is increased to 20 percent. This does not affect the 5 percent allowance permitted in 4.1 applying to other Sieve sizes.

2.6.3.3 Water for mortar

The water used for mixing and curing shall be according to Clause 2.4.3.5.

2.6.3.4 Scaffolding and ladders

The Contractor is responsible for providing, erecting, dismantling, and removing safe and adequate lifting equipment and scaffolding where required at his own cost.

2.6.3.5 Care of Tools and Accessories

All tools shall be cleaned by scraping and washing at the end each day's work, or after use with different materials. Metal tools shall be cleaned and greased after each operation. The tools shall be examined and thoroughly cleaned before

plastering is begun. Cleanliness is particularly important with cement plasters, where contamination with set material may seriously affect the performance as well as reduce the effective life of the tools.

Government of Nepal
Ministry of Water Supply and Sanitation Development
Department of Water Supply and Sewerage Management
Office Chief
Butwal, Rupandehi

2.6.3.6 Plastering

The surface to be plastered shall be brushed clean. Mortar joints of brick masonry or concrete walls to be plastered shall be raked to a depth of approximately 12mm, and the surface brushed down with a stiff brush and thoroughly wetted. The surface shall be free of all dust, loose materials, grease, etc.

Before starting plasterwork, the contractor shall prepare a sample panel of plastering of a size at least 1 m^2 for the approval of the Engineer. The sample shall be prepared in an area designated by the Engineer. The Contractor shall obtain approval before starting work and preserve the approved sample intact until all plastering is completed.

Plaster shall be applied in two coats. The thickness of the first coat shall be just sufficient to fill all unevenness of the surface. The first coat shall be applied with even, firm pressure to ensure good bond, shall be cross scratched and shall be moist cured. After the first coat has properly cured, and been allowed to dry thoroughly, the surface shall be dampened before applying the finish coat. The finish coat shall be steel trowel finished to a smooth, even, burnished surface, completely free from defects or trowel marks.

Unless specified elsewhere or otherwise directed, the thickness of plaster in total shall not be less than 12.5 mm. Wall plastering shall be started from top and work down to the floor. Ceiling plastering shall be completed before starting the wall plastering. To ensure uniform thickness and vertical plaster face, plumb guider strips may be applied as required.

If required to achieve the smooth, burnished finish, the surface shall be finished with lime putty of just sufficient thickness to fill in uneven surface or defects due to coarse sand in the plaster mix. Lime mortar finish shall be applied immediately after the finish has set sufficiently firm.

In order to obtain additional strength at external angled corners, the corners shall be dusted with cement during the steel trowel finishing of the finish coat.

Care shall be taken to ensure that finished plaster surfaces shall be plumb, square, straight, and true to line. All arises and corners shall be straight, clean, and sharp.

2.6.4 Preparation of Plaster

2.6.4.1 Proportioning

The material used in the preparation of plastering mixes may be measured by volume using gauge boxes.

Cement shall be measured by weight. For the purpose of proportioning one cubic meter of cement shall be taken to weight 1,440 kg approximately.

2.6.4.2 Quantity of Water

For general cement plaster work with 1:3 proportion the quantity of water required is about 70 percent by weight of cement. This may, however, vary depending on the following factors, and adjustment shall be done as explained in IS: 2250-1981.

a) The nature and condition of the fine aggregate.
b) The temperature and humidity at the time of working;
c) Richness of the mix, namely, whether rich or leaner than 1:3;
d) The varying quantities of lime in composite mortars; and
e) The use of admixtures added for improving the workability.

2.6.4.3 Mixing

Cement and sand shall be mixed dry in the required proportions to obtain a uniform colour. Water shall then be added to get the required consistency for the plaster.

Cement lime plaster shall be used within two hours after the addition of water to cement provided it is kept agitated or turned over at intervals of at least 20 min. Cement plasters shall be used within half an hour after the addition of water. Any mortar or plaster which is partially set shall be rejected and removed forthwith from the site.

Mixing may be done either manually or mechanically. "Hand mixing" shall be carried out on a clean, water tight platform. During mixing, the mortar shall be heed back and forth for 10 to 15 min after the water is added. In "machine mixing" the mixer shall run at least 5 min after placing all the ingredients in the drum.

Machine mixing is preferable to hand mixing for all mortars.

Government of Nepal
Ministry of Infrastructure Development
Department of Water Supply and Sewerage Management Office
Water Supply and Sewerage Management Office
Butwal, Rupandehi
Office Chief

2.6.5 General Precaution in Plastering

2.6.5.1 Cleanliness and Protection of Existing Work

Cleanliness is essential in carrying out plaster work. Adequate protection shall be given to all existing work and fittings which are liable to be damaged, not only in the area of plastering operation, but also in the approaches thereto by covering up with boards, dust sheets, etc, as necessary.

2.6.5.2 Cleaning off on Completion

On completion, all work affected by plastering operations shall be left clean. Special care is necessary when removing set plaster from glass to avoid damaging its surface.

2.6.5.3 Suction Adjustment

The careful adjustment of suction is very necessary for good plastering, and may be done either by wetting the backing suitably if it is dry, or by sprinkling with a cement-mix as in the case of a concrete surface with low suction. Without the aid of suction, plaster would creep and slide down due to its own weight. On the other hand, high rate of suction withdraws all moisture from the plaster and makes it weak porous and friable. Too much water makes it impossible to keep the mortar in position till it sets. A failure in bond due to excessive water leads to further failure as the pocket formed may hold water and break up the plaster when the water freezes; or if the water is salt laden, the same results will be produced on evaporation by crystal formation.

The wall shall not be soaked but only damped evenly before applying the plaster. If the surface becomes dry in spots, such areas shall be moistened again to restore uniform suction. A for-spray is recommended for this work.

2.6.5.4 Adjustment of Working to the Setting Properties of Plaster

Cement plasters contain materials which set when brought into contact with water, and the fullest use of their strength producing properties is not made unless the mix is applied before the setting process has started. If retampering of such mixes is carried out after the set has commenced an inevitable loss in strength and efficiency will result.

The commencement of the set is accompanied by a noticeable stiffening of the mix. It is essential, therefore, that mixes shall be used as soon as possible after water has been added and that working periods recommended in this code shall not be exceeded.

2.6.5.5 Control of Cracking

This is normally a structural problem, but the plaster will be able to reduce the effects of structural cracking by making a trowel cut between adjacent surfaces.

2.6.5.6 Maintenance of Proper Time Intervals

Shrinkage, partly irreversible, occurs on drying, causing stresses to be set up both in the applied coat and in the undercoat or background, and in order to avoid break down of adhesion between successive coats, it is very important that the drying shrinkage of the first coat should be materially complete before a subsequent coat is applied. The rate of drying will vary widely with conditions of temperature, humidity, and ventilation. Proper time interval serves to diminish the possibility of efflorescent salts finding their way to the final plaster surface, and also of the drying and naturing shrinkage (map crazing) of the undercoat reaching the finished plaster surface over a period of time. The surface then shall be allowed to set for at least a day or two depending upon the weather (one day in summer and two days in winter). During this period the surface of this coat shall be kept damp and shall not be allowed to dry.

2.6.6 Preliminary Programming of Work

All materials necessary for plastering shall be kept readily available at the site. An adequate supply of water suitable for mixing the plaster and for curing purposes shall be available.

In building operations, such as construction of brick and block walls, the encasement of steel walls, columns and beams with concrete, etc, requiring plastering shall be so programmed that they are sufficiently matured to receive the plaster without subsequent damage to plaster or decoration. Careful programming and avoidance of last minute alterations in the design or in the sequence of work can avoid serious damage to the plaster finish. Where such alterations are unavoidable the permanent decoration shall be postponed.

Plastering operations shall not be started until all necessary fixing, such as door and window frames, mantle pieces are completed and all pipes and conducts to be embedded in the wall or plaster are installed.

A preliminary inspection shall be made to ensure that the surfaces are in a suitable condition for plastering, particularly as regards their planeness and dryness. If dubbing out is necessary, it should be done in advance, so that an adequate time interval may be permitted before the application of the first undercoat. Plastering operations shall be so scheduled as to allow sufficient interval between undercoats and finishing coats.

Government of Nepal
Ministry of Infrastructure Development
Department of Water Supply and Sewerage Management
Water Supply and Sewerage Management Office
Butwal, Rupandehi
Office Chief

2.6.7 Sequence of operations

The surfaces to be plastered shall first be prepared as indicated in the sub-section "General precaution of plastering".

When the preparation has been done, arrangements may be made for a constant supply of plastering material prepared as described in 2.6.4. The plaster coat is then applied rendering surfaces.

Sometimes, ends of scaffolding BALLIES have to be housed in the wall which is being treated with plaster. In such cases after the BALLIES are taken out, the hole or holes left in the wall shall be filled up with brick and mortar, and the patch plastered up true, even and smooth in conformity with the rest of the wall, so that no sign of any patch work shows out.

Where corners and edges have to be rounded off, such rounding off shall be completed along with the plaster finishing to prevent any joint marks showing out later.

2.6.8 Special Finishing Textures

Various types of special textures for rendered surfaces may be obtained by using special tools for the application of the final coat. The special finishes shall be applied in accordance with the details given in IS: 2402-1963.

2.6.9 Trueness of Plaster System

The finished plaster surface shall not show any deviation more than 4 mm when checked with a straight edge of 2 m length placed against the surface.

2.6.10 Curing

To develop maximum strength and density in the plaster, it is necessary to cure cement plasters properly. The plaster coat shall be kept damp continuously for a maximum period of 7 days. Moistening shall commence as soon as the plaster has hardened sufficiently and is not susceptible to injury. The water shall be applied by using a fine fog-spray. Soaking of wall shall be avoided and only as much water as can be readily absorbed shall be used. Excessive evaporation on the sunny or windward sides of buildings in hot dry weather may be prevented by hanging mattings or gunny bags on the outside of the plaster and keeping them wet.

After the completion of the finishing coat, the plaster shall be kept wet for at least seven days, and shall be protected during that period from extremes of temperature and weather.

2.6.11 Approval by the Engineer of plaster work

All plaster work shall be subject to approval of the Engineer, and work failing to meet the requirements of the specifications or not being to the satisfaction of the Engineer shall be removed and reapplied at the Contractor's expense.

2.6.12 Inspection and Diagnosis –Applicable Only if the Engineer Deems it Necessary

It is essential to determine the cause of any defects of plaster work before any attempt is made to remedy or repair them and unless the cause is properly dealt with, the majority of defects will continue to recur after repair. The interpretation of defects of plasterwork and the determination of their causes can only be done by approaching the subject in a systematic and logical manner.

Since it is the final plaster finish which claims the attention of the casual observer, it is a common error to blame only the plastering materials or workmanship for all defects. Actually, these, although perhaps the most important, are not the only factors that may influence the final result.

Every defect in a plastering is more or less connected with the whole history and treatment of the background. Consideration shall be given not only to the plastering material used and to the quality of workmanship, but also the climatic conditions prior to, during and after the plastering process, and to the correct choice of the plastering system.

Detailed consideration has already been made in Clause 2.6.4 and 2.6.5 or several factors in this connection such as:

a) the possible causes for lack of bond between successive coats of plaster and between the first undercoat and the background concerned,

b) the possible effect of inadequate time intervals in promoting severe efflorescence or `map crizing' on the finished surface, and

c) the effect of climatic conditions in causing or aggravating the above as well as other troubles.

Besides, the active influences of the various atmospheric conditions, the effect of the physical properties of the building surface prior to plastering shall also receive due consideration.

2.6.13 Plastering Defects & Remedies – Applicable Only If the Engineer Deems It Necessary

It is not possible to give simple rules for the correction of all plastering defects or failures. Many serious defects may be shown to have causes outside the materials or techniques used in the plastering operations and it is often useless to repair or even replace the plaster without first having discovered and corrected the primary fault.

Thus, penetration of moisture through an external wall may cause blistering, efflorescence, flaking or complete disintegration of the plaster. To patch or to re-plaster such a wall without first taking steps to prevent further damp penetration would be useless. Again, plastered ceilings may develop cracks because the ceiling construction permits excessive deflection, and no plaster repair could be expected to be effective in preventing it. Recurrent surface dampness may be associated with the presence of deliquescent salts in the plasterwork, but it would not necessarily be effective to renew the plaster. The salts may also be in the background and would probably migrate into the new plaster and bring about a renewal of the trouble. This type of defect usually traced to the use of an unwashed estuarine or sea sand, is best corrected by battening out and erecting a new plaster base out of capillary contact with the affected area.

Defects caused by the use of unsuitable plastering material or by faulty technique may be corrected by means of an appropriate repair.

2.6.14 Measurement and Payment

All Plaster work will be measured as the net area, for the different types and thickness applicable. No deductions will be made for openings of area up to 0.2 m^2.

Government of Nepal
Ministry of Infrastructure Development
Department of Water Supply and Sewerage Management Office
Water Supply and Sewerage Management
Butwal, Rupandehi

Office Chief

2.7 Other Finishes

2.7.1 Scope

This specification covers the general construction requirements for finishes (except cement plaster work), such as flooring, painting, roofing, water proofing, etc., required in surface finishes of general civil construction (eg building, chambers, walls, manhole, etc.).

2.7.2 Interpretations

2.7.2.1 Supporting Specifications

The following specifications shall, inter alia, form part of and shall be read in conjunction with this specification:

a) 1 General
b) 2.3 Concrete Works
c) 2.4 Brickwork
d) 2.5 Stonework
e) 2.6 Cement Plaster Works

2.7.2.2 Application

This specification contains clauses that are generally applicable to finishes on walls, floors, ceiling of cast in situ and pre cast structure and associated work.

2.7.3 Materials

Cement Concrete Floor: All the materials to be used such as cement, sand, aggregates, water, and other materials shall be as have been described in the Clauses 2.3.3 and 2.4.3 or as directed by the Engineer. Unless specified elsewhere or otherwise directed, the thickness of cement concrete floor should be of 1:2:4 proportion (Cement: Sand: Aggregate) and shall not be less than 50mm thick.

Cement Floor (Cement Screed): All the materials to be used such as cement, sand, water and other materials shall be as have been described in the Clauses 2.3.3 and 2.4.3 or as directed by the Engineer. Unless specified elsewhere or otherwise directed, the thickness of cement screed floor should be of 1:6 proportion (Cement: Sand) and shall not be less than 12.5mm thick.

Cement Punning Finishing: All the materials to be used such as cement, sand, water and other materials shall be as have been described in the Clauses 2.3.3 and 2.4.3 or as directed by the Engineer. Color pigment shall be of superior quality conforming IS standards and as approved by the Engineer. Unless specified elsewhere or otherwise directed, the thickness of cement the finishing layer shall not less than 3mm and consist of cement-sand (Cement Punning) mixed at 1:1 (cement: fine sand). Cement punning should be also used as skirting purposes.

Pointing: All materials to be used such as cement, sand, water, and other materials shall be as have been described in the Clauses 2.3.3 and 2.4.3 or as directed by the Engineer. If not specified, it shall be carried out in cement mortar not leaner than 1:3.

Terrazzo Floor Finish: Terrazzo tiles shall be not less than 250 x 250 x 20 mm size unless otherwise shown or specified on the drawings or directed by the Engineer. Terrazzo tiles shall be free from cracks, chips, flaws, stones or lumps of any kind. Their granulity of embedded color chips should be regular and uniform in order to add aesthetic purpose. These tiles shall sound hard, homogeneous texture and water absorption shall be minimum during soaking. All terrazzo tiles shall have to be approved by the Engineer and any terrazzo tiles not up to the specification must be removed from the site immediately at Contractor's own cost. Representative samples of the tiles to be used shall be submitted to the Engineer and his approval taken before bulk purchase. The samples shall be kept with the Engineer for future reference and comparison. All tiles supplied shall conform to these approved samples in all respects.

Ceramic Tiles: Ceramic tiles shall be not less than 200 x 200 x 6 mm size unless otherwise shown or specified on the drawings or directed by the Engineer. They shall be either ceramic vitreous tiles, with colours as selected by the Engineer, or approved glazed tiles conforming to IS 777 or equivalent. Cement, sand, and water used for tiling work shall be in accordance with the requirements of Clause 2.4.Granular material (e.g. marble chips) for in-situ flooring, screeds, and skirting shall be as approved by the Engineer. The Contractor shall submit samples of tiles for selection and approval by the Engineer, and all tiles used shall conform to the approved samples with regard to size, quality, texture, and color.

Painting: The materials for painting and color washing of internal and external walls and similar surfaces shall conform to the requirements of the relevant applicable standards (e.g. IS 5410 or equivalent) and shall be approved by Engineer.

Waterproofing materials: Unless and otherwise mentioned in BOQ, waterproofing material, such as waterproofing bituminous felt, other bituminous materials, specified thickness of concrete band or layer and cement sand plaster with

waterproofing concrete admixture @ 2% by weight of cement or its equivalent shall be in accordance with the relevant applicable standards (e.g. IS 1322, IS 1580, IS 2645-1975 and IS 9103-1979 or equivalent).

Other items: Pigments and other necessary additives to produce colored plasters and mortars shall conform to the relevant applicable standards (e.g. IS 57 or equivalent) and shall be applied the rate of 1% by weight of cement or to produce a color and texture indicated on the drawings or as directed by the Engineer. The sample of such color plaster shall be subjected to approval of the Engineer before applying in the work.

Caulking compounds shall be of approved manufacture such as to provide a continuous waterproof barrier installed with exposed caulking smoothly recessed from the finished steel or brick surface.

The Contractor is responsible for providing, erecting, dismantling, and removing safe and adequate lifting equipment and scaffolding where required in order execute the finishes Work at his own cost.

2.7.4 Construction Equipment

Construction Equipment shall be suitable for applying the specified flooring and coating systems and for obtaining the specified results. If, however, consistent and satisfactory results are not achieved with the equipment used by the Contractor, the Engineer may order the Contractor to obtain and use such Construction Equipment as may be necessary to achieve the required results.

2.7.5 Construction and Workmanship

Special care should be taken for draining out the water while laying the floor finishes. The slopes and position of drains shall be as shown in the detailed drawings or as directed by the engineer.

2.7.5.1 Cement Concrete Floor

In the ground floor, the cement concrete floor shall be laid on a hard surface of either cement concrete or brick soiling. If the base is made of cement concrete, the flooring work shall commence within 48 hours of laying the base. If the base consists of brick soling, the surface shall be leveled with the used of brick ballast or concrete mixture before the concrete flooring is laid. The base shall be cleaned with brushes and wetted properly before the concrete flooring is laid.

In the first floor or upper floors where cement concrete floor is to be laid on R.C.C. slabs, the surface of the R.C.C. slab shall be made rough with brushes while the concrete of the slab is still green. The bases shall be provided with the slope required for the flooring as indicated in the drawings or as directed by the engineer.

2.7.5.2 Cement Floor (Cement Screed)

In the ground floor, the cement screed floor shall be laid on a hard surface of either cement concrete or brick soiling. If the base is made of cement concrete, the flooring work shall commence within 48 hours of laying the base. If the base consists of brick soling, the surface shall be levelled with the used of brick ballast or concrete mixture before the concrete flooring is laid. The base shall be cleaned with brushes and wetted properly before the cement screed flooring is laid.

In the first floor or upper floors where cement screed floor is to be laid on R.C.C. slabs, the surface of the R.C.C. slab shall be made rough with brushes while the concrete of the slab is still green.

The bases shall be provided with the slope required for the flooring as indicated in the drawings or as directed by the engineer.

2.7.5.3 Cement Floor Finishing (Cement Punning)

One layer of at least 12.5 mm thick cement sand plaster of the specified proportion shall be applied onto the surface of the cement concrete floors before cement punning. The cement plaster shall be laid according to the dimensions of the concrete floor panels and keeping the joints above the joints between the concrete floor panels. Such plaster shall be followed by a thin layer of at least 3.5 mm thick cement punning finishes of specified mix (1:1 cement sand mixture) and shall be finished with wooden or steel floats.

After laying the cement concrete floor, the surface shall be left undisturoed for about 2 hours after which it shall be covered with wet jute bags. Curing of the concrete by flooding water on the surface for at least 7 days shall commence only after 24 hours of laying the concrete.

The same brand of cement shall be used throughout and the same proportion is maintained strictly to have a uniform color. Junctions of the floor with wall plaster, dado and skirting shall be rounded of neatly.

Skirting work shall be of same mix and thickness of cement punning. Skirting work shall be done simultaneously with flooring work or as directed. Skirting work shall include racking, cleaning and wetting of the base as well as applying cement plaster and cement punning. The top edge of the skirting shall be champhered to prevent dust collection.

Curing and protection of cast in situ floor shall be in accordance with the requirements of Clauses 2.3.6.13 and 2.6.10.

Government of Nepal
Ministry of Infrastructure Development
Department of Water Supply and Sewerage Management Office
Water Supply and Sewerage Management Office

Office Chief

2.7.5.4 Pointing

Pointing, if specified, shall be carried out in cement mortar not leaner than 1:3. The thickness of joints shall not exceed what is prescribed for each type of masonry. In the face work raked out joints up to a depth of at least 20 mm shall be filled with mortar of specified mix and of required consistency and then shall be well pressed and rubbed smooth.

2.7.5.5 Terrazzo Tiles

The tiles shall be socked in water for at least 2 hours before laying. Tiles which are to be fixed in the floor adjoining the wall shall be arranged so that the surface of the round edge tiles shall correspond to the skirting or dado. Neat cement grant of honey like consistency shall be spread over the bedding mortar just to cover so much area as can be tiled within half an hour. The edges of the tiles shall be smeared with neat white cement slurry and fixed in this grout one after the other, each tile being well pressed and gently tapped with a wooden mallet till it is properly bedded and in level with the adjoining tiles. There shall be no hollows in the bed or joints. The joints shall be kept as close as possible and in straight lines. The joints between the tiles shall not exceed 4.50 mm wide. The joints shall be grouted with slurry of white cement.

Finishing of the skirting shall be in same material or different as specified in the specification and as directed by the engineer. All the top lines shall be in perfect line and level (if sloped regular). The vertical joints of the skirting in case the tiles are provided shall be in the regular pattern corresponding to the joints of floor. The parts of the walls where the tiles are to be provided shall be chiseled, rocked, brushed, and cleaned properly and cement mortar of the specified proportion is then provided. Other method of laying may also be used but only with the permission of the engineer.

Rubbing by carborendem stone at least three phase shall be carried out to give perfect finishes. The joints should be leveled and smooth as the terrazzo tiles.

Where full size tiles cannot be laid, they shall be cut (sawn) to the required size and the edges rubbed smooth to ensure a true and straight joint.

Joints in tile work shall be accurately aligned with horizontal joints level and vertical joints plumb. The joints shall be maintained uniformly wide by aligning spacer lugs on tile edges if tiles are so manufactured or by use of wetted strings.

The layout of tile work shall be so that no tile less than half size occurs. Where tiles must be cut at edges or penetrations, the cut edges shall be carefully fitted and neatly ground. No chipped, cracked, or broken tile shall be used and all defective work shall be replaced and repaired to the satisfaction of the Engineer and at the Contractor's expense.

After tiles have been set firm and joint strings removed, tiles shall be dampened and joints grouted full with a plastic mix of neat cement by trowel, brush, or finger application. Unless otherwise directed, grout shall be made with white cement. During grouting all excess grout shall be cleaned off the tile surface with damp cloth sponges.

Where the setting bed is applied directly to a concrete slab, the slab surface shall be thoroughly wetted, with no free water left standing, and sprinkled with dry cement. The setting bed shall be 1:4 cement mortar and shall be placed to the required level, grade and slope and tamped firmly.

All finishing tile work shall be adequately protected from damage during the progress of construction and any damage shall be repaired to the satisfaction of the Engineer at the Contractor's expense.

2.7.5.6 Ceramic Tiles

Wall and floor surface shall be brushed clean, wetted, and fitted with an approximately 12.5 mm thick level and plumb scratch coat of cement mortar 1:3 applied in accordance with Clause 2.6. The scratch coat shall be moist cured for at least 24 h before the application of a floating coat. Before applying this floating coat, the scratch coat shall be thoroughly wetted. The floating coat, a plastic mix of neat cement of approximately 3 mm thickness shall be applied even, and with screed to true plane. The floating coat shall be applied over areas no larger than can be covered with tiles while the mortar is still plastic (half set). Glazed tiles shall be soaked, completely immersed in clean water, at least 30 minimum and drained.

Tiles shall be installed by applying a skin coat of a plastic mix of neat cement to backs of tiles and firmly pressing them into the floating coat to true plane and position. White cement shall be used for the skin coat where white joints are required.

Tiles shall be installed by dusting a thin layer of dry cement over the setting bed worked lightly with trowel or brush until damp, and tiles shall than be set with straight uniform joints 1 mm or less in width, accurately aligned in both directions and tamped solidly to the bed.

During the process of setting tiles, continuous horizontal and vertical cuts every 40 to 60 cm shall be made through the floating coat while plastic, using the point of a trowel turned edge wise. Care shall be taken to prevent cutting into the scratch coat.

Where full size tiles cannot be laid, they shall be cut (sawn) to the required size and the edges rubbed smooth to ensure a true and straight joint.

Joints in tile work shall be accurately aligned with horizontal joints level and vertical joints plumb. The joints shall be maintained uniformly wide by aligning spacer lugs on tile edges if tiles are so manufactured or by use of wetted strings.

The layout of tile work shall be so that no tile less than half size occurs. Where tiles must be cut at edges or penetrations, the cut edges shall be carefully fitted and neatly ground. No chipped, cracked, or broken tile shall be used and all defective work shall be replaced and repaired to the satisfaction of the Engineer and at the Contractor's expense.

After tiles have been set firm and joint strings removed, tiles shall be dampened and joints grouted full with a plastic mix of neat cement by trowel, brush or finger application. Unless otherwise directed, grout shall be made with white cement. During grouting all excess grout shall be cleaned off the tile surface with damp cloth sponges.

Where the setting bed is applied directly to a concrete slab, the slab surface shall be thoroughly wetted, with no free water left standing, and sprinkled with dry cement. The setting bed shall be 1:5 cement mortars and shall be placed to the required level, grade, and slope and tamped firmly. Cement mortar at a rate of 4.4 kg per square meter shall then be spread. The floor tiles shall then be placed in position and tapped with a wooden mallet until the tiles are properly bedded in line and level.

Where the setting bed is applied over a waterproofing membrane, metal reinforcing wire mesh shall be installed lapped at least one full mesh at edges and supported so as to be located approximately mid-height of setting bed. At edges where wall tiles are foreseen, the mesh shall be turned up at least 80 mm.

All finishing tile work shall be adequately protected from damage during the progress of construction and any damage shall be repaired to the satisfaction of the Engineer at the Contractor's expense.

2.7.5.7 Waterproof Cement Paint

The contents of each fresh container of the paint shall be loosened by rolling or shaking the container before opening for the first time. To one volume of water in a clean container, an equal volume of cement paint shall be added and stirred well to achieve a uniform consistency. No further dilution will be permitted.

The cement paint powder shall be kept secured from exposure to atmosphere by properly tying up the polythene liner in the container and keeping the lid firmly closed.

The cement paint shall be used within two hours of mixing and shall be kept stirring during use.

For application, the base surface shall be cleaned by use of a stiff brush to remove loose dust and dirt. The base surface shall be thoroughly wetted and water allowed to run off.

The first coat shall be well brushed in a manner to give a good bond of the paint with the surface. The second and subsequent coats shall be brushed or sprayed as approved. The cement paint shall be applied at the following rate:

a) on brickwork	2 kg/m²
b) on in situ concrete	3.5 kg/m²
c) on concrete blocks	2 kg/m²
d) on cement sand rendering	3.2 kg/m²

The curing of the waterproof cement paint shall be carried out by application of fine water spray at an interval of 6 to 8 h after the application of the paint for duration of at least 7d.

The finished surface shall be protected from any damages, staining, etc., by approved means.

2.7.5.8 Oil bound distemper

All plaster surfaces shall be thoroughly cleaned and shall receive 3 or more coats. The first coat shall be a prime coat. The second and third coats shall be of oil bound distemper of approved colour, shade, and quality, and shall be mixed in accordance with the manufacturer's recommendations.

After these operations, if the work is not to the satisfaction of the Engineer, one or more coats shall be applied without extra cost to the Employer until a smooth and even surface is achieved and approved by the Engineer.

2.7.5.9 Distempering

Distemper shall be dry distemper as approved by the Engineer. The distemper shall be mixed with clean water as recommended by the manufacturer and shall be stirred until the mixture attains an even consistency.

The surface shall be cleaned, cracks and holes repaired, all irregularities and inequalities sand papered smooth and wiped clean to present a fine smooth surface which shall be completely dry before distempering is started.

The mixture shall be applied evenly with a brush in long parallel strokes evenly so as not to leave any visible brush marks.

The surface of this first application shall be allowed to dry and harden. Then the second coat shall be applied on the first coat. If a uniform surface is not achieved, a third coat shall be applied.

Government of Nepal
Ministry of Infrastructure Development
Department of Water Supply and Sewerage Management Office
Water Supply and Sewerage Management Office
Butwal, Rupandehi

Office Chief

2.7.5.10 Plastic Emulsion Paint

The surface shall be prepared as specified for oil paints. First, a priming coat of primer as specified by the manufacturer shall be applied.

The second and third coats of plastic emulsion paint of approved shade and manufacture shall be applied to achieve an even surface. If the finish is not to the satisfaction of the Engineer, more coats shall be applied at no cost to the Employer to achieve a smooth and even surface.

2.7.5.11 Ready-mixed Enamel Paint

Surfaces to be painted shall be dry, free from dust and dirt, and rubbed smooth by means of sand paper or pumice stone to the satisfaction of the Engineer.

The paint shall be ready-mixed synthetic enamel or oil paint of approved make and manufacture. The primary coat (primer) shall be applied evenly with a brush. After the primary coat is applied and perfectly dried, all holes, cracks etc. shall be filled with putty and the surfaces sand papered (finishing touch in primary coat). A first coat of paint of approved shade and manufacture shall then be evenly applied and allowed to dry (after giving finishing touch to primer). The second coat shall be carefully applied as and when required, to achieve a smooth and even surface.

2.7.5.12 French Polish

The work shall be first cleaned and sandpapered thoroughly. It then will be painted with a `filler', composed of methylated spirit, and sandpapered.

A thin coat of French Polish shall then be applied and sand papered. Subsequent coats of French Polish shall be applied till the proper finishing is achieved to the satisfaction of the Engineer.

2.7.5.13 Roofing

A water proofing coating on bare reinforced concrete roofs shall be bitumen based and shall be applied in two layers of primer and one layer of finishing coat in accordance with the manufacturer's instructions and recommendations.

Such coating shall be applied by brushing, spraying, or roller application and shall be placed on concrete which has been cured and has reached an age of not less than 3 months.

If not otherwise shown on the drawings or directed by the Engineer, the prime coats shall be applied at a rate of approximately 0.85 l/m² and the final coat at a rate of about 1.2 l/m².

Care shall be taken in connection with drains, gutters, etc. to achieve proper flashing and lapping with the bitumen coating.

2.7.6 Tolerances

The tolerances for flooring work shall be as described in Clause 2.3.7, as applicable, unless otherwise agreed between the Contractor and the Engineer prior to the commencement of the work.

2.7.7 Measurement and Payment

Finishing work will be measured as the net areas covered and no deductions made for openings of area up to 0.10 m² or else unit as mentioned in BOQ. Separate items will be scheduled for each type of finish, and for different location of application, if such location will substantially effect the pricing.

Government of Nepal
Ministry of Infrastructure Development
Department of Water Supply and Sewerage Management
Water Supply and Sewerage Management Office
Butwal, Rupandehi

Office Chief

2.8 Steel and Metalwork

2.8.1 Scope

This specification covers metalwork for structural steelwork, buildings, and other structures, it includes sundry items such as metal doors, and windows, ladders, stairs, handrails, open grid flooring, fences, railings, grills, gates etc.

2.8.2 Structural Steel Work

Structural steel work shall conform to the requirements of BS 449; steel shall comply with BS 15, BS 548, BS 968 whichever is appropriate and steel tubes for structural purposes shall comply with BS 1775 and shall be obtained from a manufacturer to the prior approval of the Engineer

Steelwork shall be thoroughly de-scaled to BS 4232 second quality and shall be painted with two coats of two pack epoxy based red lead primer before leaving the manufacturer's works. Any damage to this coating shall be repainted before erection.

2.8.3 Bolts and Nuts

Bolts, ragbolts, nuts and washers shall conform to BS 15 as regards material and BS 916 as regards dimensions. Each bolt shall be provided with two washers and bolts shall be long enough to show a full thread through the nut after fixing. All bolts, ragbolts, nuts and washers shall be hot-dip galvanized in accordance with BS 729.

2.8.4 Steel Chequered Plate

Chequer plating shall be mild steel and shall have a non-slip pattern on its upper face.

Chequer plates shall be securely bolted with countersunk screw studs to frames set in the edges of and spanning the ducts or opening. Chequer plates for use in valve chambers or manholes shall be hinged to one side of the frames unless otherwise specified.

The sizes of chequer plates shall be such that no discernible deflection occurs under the weights of a man standing upon it. Where it is not practicable to provide individual frames to each plate, the plates shall be stiffened by welding steel angles on their underside to eliminate discernible deflection. The plate panel sizes shall be such that they can be lifted by two men easily and each panel shall be provided with suitable sized lifting holes.

The edges of all chequer plates shall be finished straight or to the outline of obstructions and shall be free of burn marks or irregularities. Chequer plating which has been cut with a torch shall afterwards be ground to present a straight edge.

Chequer plating shall be thoroughly wire brushed and painted with two coats of two pack epoxy based red lead primer before delivery. After installation on Site chequer plates sued in valve chambers shall be painted with a further two

coats of two pack coal tar epoxy paint. Chequer plates used elsewhere shall be painted on the lower (hidden) upper (exposed) surfaces with one undercoat, two coats of semi-gloss high finishing paint of approved quality and colour.

2.8.5 Handrailing

Handrailings shall be made from hot-dip galvanized mild steel hollow sections and flats. After cleaning with lithoform, it shall be painted with two coats of two pack epoxy red lead primer, an undercoat and a further 2 coats of an approved gloss paint after installation. Expansion units shall be provided where the handrailings are more than 15 metre long.

Where safety chains are required, they are to be galvanised mild steel 10mm nominal size, short links, smooth welded chains in accordance with BS 4942 Part 2. Each length of chain shall be fitted with a shackle at one end and a nap fastening at the other.

The rates for handrailing shall include for painting and formation and subsequent grouting up of pockets in the concrete for stanchions.

2.8.6 Ladder

Mild steel ladders shall be hot-dip galvanised in accordance with BS 729. After cleaning with lithoform it shall be painted with two coats of approved two pack coal tar epoxy paint which shall be obtained from an approved manufacturer. Unless detailed on the Drawings, the Contractor shall submit to the Engineer detailed drawings of the ladder for approval before placing any orders.

Steel ladders shall be 450mm wide, of welded construction and shall not have an unsupported length of more than 2 metre. Intermediate support between the ends of the ladder shall be by means of stays securely fixed to the nearest part of the structure.

The steel ladders shall be galvanised before leaving the manufacturers' premises and the Contract Rates for supplying and fixing steel ladders shall include for painting as specified, and for all nuts, bolts, stays and other things necessary for fixing the ladders securely in place.

Government of Nepal
Ministry of Infrastructure Development
Department of Water Supply and Sewerage Management
Water Supply and Sewerage Management Office
Butwal, Rupandehi

Office Chief

2.8.7 Step Irons

Steel irons for use in chambers shall unless otherwise specified be bent from 25mm diameter mild steel bars to the shape and dimensions shown on the Drawings and shall be hot-dip galvanised after bending. Step irons shall be measured by number and the Contract Rates for step irons shall include for the supply and all necessary fixing work galvanising and painting with 2 coats of approved two pack coal tar epoxy paint.

2.8.8 Fencing

Fencing shall be as detailed on the Drawings. If it is not mentioned in the drawings the Fencing shall be:

Chain link for fencing shall be PVC coated and consist of hot dipped galvanised 3.7mm wire of 50mm square mesh reinforced with 3 nos. 4.1 mm hot dipped galvanised line wires. Barbed wires shall be galvanised two ply 2.64 mm with 4 point barbs spaced at 75 mm interval.

Fence posts shall be of 64mm x 64mm x 9.4mm hot dipped galvanised mild steel angles spaced at 3.0 metre intervals with straining posts at all corners and at intervals of 15 metre. Stays for straining posts shall be 51mm x 51mm x 6.3mm hot dipped galvanised mild steel angles raked at 45. All mild steel angles shall be galvanised and painted in accordance with BS 5493. All fence posts and struts shall be sunk into post holes 300mm x 300mm x 750mm deep, and filled in with Grade 20 concrete to be flushed with ground level.

Suitable gate as shown in the drawings shall be provided to match the fencing. This gate shall be complete with lock gears and a 75mm lock of approved brand. Four (4) keys shall be provided for the locks.

The Contract Rates for fencing and gate shall include for the supply of all materials, galvanising, excavation, erection of the fencing complete painting with 2 coats of approved paint, fence posts, stays corner posts, concrete support and dwarf walls. Payment will be made for the net length of fencing and number of gate erected.

2.8.9 Aluminium Structures and Sections

Aluminium structures shall be constructed in alloy NE8M to BS 1474. Cold working shall be avoided. All hollow boxed and pressed sections shall be extruded from fully heat treated aluminium alloy and etched and anodised in bronze colour to BS 1615. Recesses on internal faces of boxed sections shall be finished with a strip of 13mm x 6.5mm black vinyl glued on. Where aluminium members are in contact with other non-aluminium structures the contact faces shall be protected by insulating pads of neoprene bitumen alloy.

2.8.10 Galvanized Metals

All metals to be galvanized shall be of the full dimensions shown or specified and all punching, cutting, drilling, screw tapping, welding and the removal of burrs shall be completed before the galvanising process commences.

All galvanizing shall be done by the hot-dip process with spilter, not less than 98% of which shall be pure zinc. Bolts, nuts and washers shall be completely galvanized including the threads but galvanizing removed in the course of nut fixing may be replaced with an approved zinc rich paint.

The galvanizing shall be uniform, clean, smooth and as free from spangle as possible. It shall weigh not less than 6.00 grams per square meter of area covered and be not less than 0.1mm thick.

All galvanized metal parts shall be protected from damage due to electrolytic action, white rust and abrasion during delivery, storage and erection. Minor damage shall be touched up with an approved zinc chromate or other approved metallic compound but if, in the opinion of the Engineer the damage to the galvanizing is too severe or extensive the part shall be removed and be re-galvanized.

2.8.11 Dissimilar Metals

The Contractor shall not use fixtures and fittings for metalwork including pipe-work in which dissimilar metals likely to lead to galvanic action are placed in permanent contact with each other.

2.8.12 Manhole Covers, Surface Boxes, etc.

Ductile iron manhole and access covers, surface boxes, gulley grating and frames shall be obtained from an approved manufacturer and shall comply generally with BS 497. Items not covered by this standard shall be of a quality equal to the first grade available in the country.

Access covers and surface boxes exposed to the weather shall incorporate a waterproof seal.

Frames shall be firmly bedded in 1:3 cement/sand mortar and the tops of all covers and gratings shall be flush with the finished surface of the surrounding floor, ground for pavement. Four sets of each type of lifting key shall be supplied by the Contractor.

Office Chief

2.8.12.1 Metal Doors, Windows, Ventilators, Glazed Shutters etc.

Glazed units shall be made from galvanized steel folded sheets sections, anodised extruded aluminium sections, or approved equivalent free from rolling defects.

All steel doors, windows and glazing shall conform to IS 4351 or equal approved with electro galvanized finish conforming IS 1570 unless otherwise directed. The doors, window and ventilation frame section are made of folded plate as per manufacturer's specification to conform to the drawings.

2.8.12.2 Window grills, fences, railing and gates.

Mild steel grill, fences, railing and gates of approved pattern and manufacture, all complete, shall be as shown on the drawings or as directed and shall comply with the requirements of IS 800 or equal approved.

2.8.12.3 Collapsible gates and rolling shutters.

These shall be double or single collapsible gates depending upon the size of the opening. The collapsible gates shall consist of vertical channels 20 x 5 mm and top and bottom rails of T-iron 40 x 40 x 6 mm with 38 mm dia. steel pulleys or ball bearings in every 4th double channels, unless otherwise specified. Where a collapsible gate is provided with the opening and is fixed along the outer surface the T-iron at the top may be replaced by flat iron 40 x 10 mm. The collapsible gate shall be provided with necessary bolts and nuts, locking arrangement, stoppers, and handles.

Unless otherwise ordered, the rolling shutters shall conform to IS 6248 and be suitable for fixing in the position ordered i.e. outside, inside, on or below lintel or between jambs. Shutters up to 12 m² in area shall be manually operated or push up type while bigger sizes shall be of reduction gear type mechanically operated by chain or handles. Laths shall be of 18 gauge best quality mild steel 75 mm wide strips interlocking, rolling centres, machine rolled and straightened with an effective bridge depth of 16 mm. Side guides and bottom rails shall be built up mild steel rolled sections. The spring assembly shall be supported on strong mild steel or malleable cast iron brackets shaped to fit the lintel. The rolling springs shall be from tested unbreakable high tensile steel wire or strip of adequate strength to balance the shutter in all positions. The shutter shall be complete with door suspension shafts, locking arrangement, pulling hooks, handles and other accessories.

2.8.12.4 Welding Consumables

Welding electrodes shall comply with, and shall be stored and handled in accordance with, the requirements set out in the relevant applicable standards (e.g. BS 639, IS 814). Welding consumables shall be such that they produce weld metal that has a minimum yield stress and minimum tensile strength at least equal to those of the parent metals.

2.8.12.5 Coating Materials

All coating materials and constituents shall be delivered in the manufacturer's original sealed containers which bear the manufacturer's labels. Each label shall display all the information necessary to ensure correct storage and traceability, and instructions for the application of the contents of the containers. Any container showing traces of leakage shall, before use, be rejected together with its contents.

The Engineer may require that the contents of any container be subjected to sample testing. All coating materials held in storage prior to use shall be kept in an approved store which shall be dry and enclosed. Care shall be taken to avoid the accumulation of old stock.

All Site stores used for the storage of coating material shall be provided with adequate fire extinguishers placed in a prominent and accessible position outside the entrances. "No smoking" signs shall be placed inside and outside such stores. No naked flames shall be permitted inside such stores.

Stores for coating materials shall not, at any time, be used for the accommodation of personnel.

2.8.13 Measurement and Payment

Work involving metalwork will be measured as specified relevant section of the specification or in BOQ, which will include all materials, fabrication, corrosion protection, and installation.

Government of Nepal
Ministry of Infrastructure Development
Department of Water Supply and Sewerage Management Office
Water Supply and Sewerage Management
Butwal, Rupandehi
Office Chief

2.9 Carpentry and Joinery Works

2.9.1 Scope

This specification covers the general construction requirements for timber work, carpentry and joinery, required in general building construction (e.g. office building, guardhouse and operator's quarter at reservoir sites, etc.).

2.9.2 Interpretations

2.9.2.1 Supporting Specifications

The following specifications shall, inter alia, form part of and shall be read in conjunction with this specification:

a) 1 Item of General Application
b) 2.3 Cement Concrete
c) 2.4 Brickwork
d) 2.5 Stone Masonry Work, as applicable
e) 2.6 Cement plaster Works, as applicable

2.9.2.2 Application

This specification contains clauses that are generally applicable to timber works, carpentry and joinery for buildings and associated work.

2.9.3 Materials

Woodwork in doors & windows frames and shutters with good finish including fixing with necessary fixtures all complete as per drawing and instruction.

2.9.3.1 Timber

Timber for general purposes shall be approved hardwood of the best quality generally complying with IS: 1326, Grade1, or similar and planed on all sides. The timbers shall be impregnated with an odourless wood preservative. It shall be uniform in substance, straight in fiber, free from large, loose, dead and cluster knots, flaws, shakes, wasp, cup spring, twist, bends, saps and defects of any kind. It should be free from spongy, brittle, flaky or brushy condition, sapwood and bore holes.

All timber shall be seasoned and be free from decay, and harmful fungi and insect attacks and from any other damage or harmful nature which will affect the strength, durability, appearances or its usefulness for the purpose for which it is required.

The timber shall be of best quality timbers specified in the item. The samples of the timber to be used shall be submitted for the approval of the Engineer. The samples of the approved timber to be used shall be deposited in the office of Engineer for the purpose of comparison.

Treated lumber shall be accompanied by a certificate from a recognized lumber treating company, certifying the amount of treatment and the percentage of moisture after drying.

For the structural components which will be concealed after installation, e.g., in the case of built-in cupboards, wardrobes or wall linings, either the type of wood specified for the unconcealed structural components (spruce, fir, pine or a wood of at least equal quality) or an equally suitable material may be used at the Contractor's own choice, unless otherwise specified.

The timber shall be in a suitable condition so that the components made of it will neither crack, warp nor twist. The moisture content of timber assemblies when leaving the manufacturer's works shall be as follows (referred to the oven- dry weight):

a) 8 to 12% for interior finish components
b) 10 to 15% for structural parts in permanent connection with the outside air.

Proof of this moisture content shall be furnished to the Engineer.

For plywood and wood chip boards, all surfaces to be veneered or seal coated shall be adequately closed.

Wooden fiber boards, veneers, coating slabs and coating foils of plastics shall be suitable for their intended applications.

All coating materials shall form a good bond with the base. Their surface shall be readily brushable and insensitive to wiping contact.

All polish (polishing varnish) shall be fast to light and unsuitable condition so that it provides a surface which is elastic to the greatest possible extent and resistant to scratches, water, acid and heat.

Government of Nepal
Ministry of Infrastructure Development
Department of Water Supply and Sewerage Management
Water Supply and Sewerage Management Office
Office Chief

2.9.3.2 Preservatives

All timber for carpentry and joinery placed in contact with masonry or concrete shall be given a coating of coaltar or cresote before being fixed in position. Wood preservatives shall be of an officially approved type. Where subsequent painting of the timber is required, the wood preservative shall be compatible with the paint. In interior applications, the wood preservative shall be odourless. The rates quoted for woodwork shall provide for such treatments.

2.9.3.3 Cover Moulds

In areas where the door or window frame are fixed flush with wall or plaster surface, teakwoods cover moulds of size 40 x 12mm shall be provided all round without an extra charge. The cover mould shall be given the same finish as the main frame, and overlap the masonry / plaster by at least 25mm.

2.9.3.4 Rebates

All door and window frames shall have cut rebates as per the drawings. Planted rebates shall not be allowed. The unrebated edges of the frames shall be rounded or chamfered as may be shown on the drawings. When not indicated on the drawings, they shall be beaded uniformly.

2.9.3.5 Post Keys

The vertical post of doorframes in the ground floor shall be embedded 25mm. On upper floors they shall be embedded in the floor slab by chiping a receptacle 12mm deep. The frames shall be installed in position and held plumb and level with strong supports from both sides as masonry works proceed.

2.9.3.6 Hold Fast

These shall be of M.S. flat with one end split into two and turned for anchorage into cement concrete blocks 1:2:4, the holdfasts shall be fixed to an adequately sized recess in the door frames with 30mm screws. There shall be one such holdfast on each side of frames of up 76 cm height, 2 on each side of frames upto 152 cm height. The position of the holdfasts shall be as shown on the drawings with minor adjustment to suit brick coursed or as directed by the Engineer. All holdfasts with concrete blocks shall be laid as the masonry work proceeds and not fixed afterwards. This concrete block shall neither be measured separately nor any deduction is made in brick work for these blocks.

Door frames when abutting on RCC member shall be fixed to RCC members with rawl plugs 50mm long and wooden screws of required sizes. Screws heads shall be sunk into frame and plugged properly.

2.9.3.7 Panelled Shutter

The shutter shall be paneled single, double, triple or more. The design, panels and the number of panels to be used shall be as per drawing or as per the direction of the Engineer. The styles shall be continuous from top to bottom. The top, freize, muntins or mullions shall be jointed to the styles and their muntins shall be jointed to the rail with wooden or bamboo pins or as directed by the Engineer. The thickness of the frame for the shutter varies depending upon the size of the door, situation and thickness of the panel as shown in the drawings or as directed by the Engineer. Grooves shall be made on all the inside faces of the frames to receive panels. Before fixing the panels in the grooves of styles, rails etc. plaster of white zinc shall be treated on the panel for proper adhesion.

Mortice and tenon joints between the styles and the top frienze, the muntins and rails shall be to the full width of the member. The tenon shall not be less than 12mm thick and shall be glued into the mortices inaddition to being pinned with wood dowels of not less than mm diameter. If mortices are tapered, the tenons may be wedged into them.

Each panel shall be in a single width piece, the contractor shall endure that the solid panels shall have their grains running along the layer dimensions.

Grooves in stile for panel fixing shall be 12mm wide and at least 20mm deep, panel edges shall be coated with and approved glue prior to insertion into the groove. Care shall be taken to see that there is no gap between the panel face and the sides of the groove.

The clearances between the finished shutter and the door frames and between the shutters themselves (when couble leafed) shall not exceed 3 mm unless otherwise specified in the drawings.

2.9.3.8 Flush Door Shutter

Unless specified elsewhere or otherwise directed, door shutters shall be of veneered plywood of thickness not less than 4.5mm or plain galvanized sheet of 18 standard wire gauge. The thickness of the frame for the shutter varies depending upon the size of the door, situation and thickness of the panel as shown in the drawings or as directed by the Engineer. Sheets shall be flushed on both sides of wooden frame as per drawings. The beading shall be of solid timber of any of the species mentioned in Table 3 of IS: 2202 (Part I) -1966. The beading shall be to the full thickness of the door. The depth of beading all round shall be not less than 25 mm excluding the tongue and brew joint using BWR type adhesives conforming to IS:848-1956, and the beading shall be further secured by additional screws of adequate length. The tongue shall not be less than 12 mm deep and its width shall not be less than 1/3 of the finished thickness of the shutter.

The timber used for beading for flush doors with decorative face shall preferably be of the same species as the face veneers unless otherwise mentioned. Samples of such shutters shall be submitted for approval.

Each sheet on the flush door shall be in a single width piece. The clearances between the finished shutter and the door frames and between the shutters themselves (when couble leafed) shall not exceed 3 mm unless otherwise specified in the drawings.

2.9.3.9 Fixtures & Fastening

Unless specified elsewhere or otherwise directed, every leaf of door and window shutter should provided and find fixed in position with following fixtures & fastening. All fittings shall be submitted to the Engineer in good time for approval.

Description of Fixtures	Door Leaf	Window Leaf
Brass or mortise lock of approved size and quality	1 No.	Nil
Hinges, 150mm long with screw	3 Nos. (150 mm long)	(2 Nos. 100 mm long)
Aluminum tower bolt with screw	2 Nos. (300 mm long)	2 Nos. (200 mm long)
Brass handle with screws	2 Nos (150 mm long)	1 Nos (100 mm long)
Rubber buffer stops with screws	2 Nos	Not Necessary
Aluminum locking pin (restricting window leaf movement during wind)	Not Necessary	1 No. (125 mm long)

All fixtures shall be fixed to the jointing in a secure and efficient manner. Any of the fixtures damaged during fixing shall be removed and new ones fixed in their place and the surface of the joinery made good where affected at the Contractor's expenses. When the type is not mentioned on the drawing it shall be as directed by the Engineer.

If detailed drawing specifies different types of fixture, the work shall be carried out according to the drawing. Screw shall be suitable length & cover diameter & shall be fixed with screws driven & not by hammers.

2.9.4 Construction Equipment

Equipment and tools for the execution of timber work, carpentry and joinery shall be sufficient in number and capacity, in good working order, and in accordance with the requirements of the applicable safety regulations.

2.9.5 Construction and Workmanship

If not otherwise shown on the drawings, or directed by the Engineer, DIN 18334 shall be binding for the execution of the Works as well as the other DIN Standards as follow:

a) DIN 1052 Timber Structures
b) DIN 68365 Timber for Carpenters' Work, Quality Specifications
c) DIN 4074 Timber for Wood Building Components
d) DIN 68800 Timber Protection in Building Construction
e) DIN 17440 Stainless Steel; Quality Specification
f) DIN 18202 Dimensional Tolerances in Building Construction,

Timber as specified shall be jointed and erected in accordance with DIN 1052 and the drawings, including the required wind bracing. Posts shall be fixed to the concrete slab by means of bearing plates, straps and angles according to the structural calculations. Only non-rusting steel according to DIN 17440, Material No. 1.4571 shall be used for fixing components.

The Contractor shall supply to the Engineer shop drawings in accordance with the architectural design and Contractor's static analysis, which are subject to approval before any execution starts.

All structural components shall not warp or crack under any circumstances including stresses due to temperature and humidity that will have to be expected.

All timber connections and metres shall be accurately fitted. The surface exposed to view shall be trimmed, eg by planing and grinding. There shall be no plane cutting marks.

Solid timbers shall be joined in such a way that in the event of variations of air humidity, the wood is free to swell and shrink without affecting the joint.

Framing timbers shall not be butted. Dovetailing may be used subject to the Engineer's consent.

All edge surfaces of plywood, plain galvanized sheets and composite shutter exposed to view shall be veneered or provided with banding (insets or strips). On sealed, veneered and coated surfaces joints and irregularities of the base shall not show even after final drying.

All grained veneers and Plain Galvanized sheets shutter shall be protected against tearing. All timbers ultimately in contact with outside air, or permanently in contact with particularly humid air, or connected to masonry or concrete, shall be treated on all sides with suitable wood preservative before being inserted. The manufacturer's instructions shall be observed.

2.9.6 Test and Acceptance

A selection of samples for visual inspection and dimensional checks on material and fittings may be made by the Engineer. Supplier's material and test certificates pertaining to the material to be used shall be supplied to the Engineer by the Contractor. The Engineer shall have access at all reasonable times to all places where the work is being carried out and shall be provided with all the necessary facilities for inspection during all stages of manufacture or construction.

2.9.7 Measurement and Payment

Generally, the items shall be measured in-situ. The method of measurement shall be based on the following:

Unless stated otherwise in the BOQ, payment for windows and doors shall be made by number for each type and size. If items scheduled call for measurement by area, architraves linings, sills etc. shall not be measured separately but shall be considered as being included in the area of the opening closed by the window, door, shuttering or any other specified closure.

Wall panels or linings will be paid for by area. The unit rate shall include all substructure, fasteners, doweling etc.

Built-in cupboards, cabinets and wardrobes will be paid for separately according to types and dimensions, by covered rear wall area.

Surface treatment will be paid separately at the area treated.

All costs for hardware and iron ironmongery shall be included in the unit rate of the relevant bill item.

Government of Nepal
Ministry of Infrastructure Development
Department of Water Supply and Sewerage Management Office
Water Supply and Sewerage Management Office
Butwal, Rupandehi

Office Chief

2.10 Roads and Parking Areas

2.10.1 Scope

This specification covers the construction of new roads, parking areas and reinstatement of Roads, Bridges and Culverts.

2.10.2 Interpretations

2.10.2.1 Supporting Specifications

The following specifications shall, inter alia, form part of and shall be read in conjunction with this specification:

a) 1.1 General
b) 2.1 Site Clearance
c) 2.2 Earthworks

2.10.2.2 Application

This specification contains clauses that are generally applicable to construction of new roads, parking areas and reinstatement of Roads, Culverts, and Bridges.

2.10.3 Materials

2.10.3.1 Classification for excavation purposes

All excavations for new roads and parking areas will be classified as set out in Clause 2.2.3.1.

2.10.3.2 Classification for placing purposes

All materials for new roads and parking areas will be classified as set out in Sub-section below:

2.10.3.2.1 Fill for Embankments

Fill for embankments shall comply with the provisions of Clause 2.2.3.2.

2.10.3.2.2 Sub-base and Gravelling

The grading of material shall be a smooth curve within and approximately parallel to the envelope given in table 2. 10.

The plasticity index shall not exceed 6.

The minimum 4 day soaked CBR of the material shall be 30% at the specified in situ density.

Table 2-8: Grading Envelope

Sieve Size (mm)	Percentage by weight passing	
	Type A	Type B
63	100	-
50	-	100
37.5	65 – 95	80 – 100
20	50 – 85	60 – 100
10	40 – 75	-
5	30 – 60	30 – 100
2.36	20 – 45	-
1.18	15 – 37	17 – 7
0.3	-	9 – 50
0.075	4 – 15	5 – 25

2.10.3.2.3 Water Bound Macadam

Coarse aggregates - Coarse aggregates shall be crushed or broken stone. The aggregates shall conform to the physical requirements set forth in Table 2.11.

Table 2-9: Physical requirements of Coarse Aggregates for Water Bound Macadam for Base Course

Los Angeles Abrasion Max	45
Flakiness Index Max.	35
Aggregate Impact Value Max	35

The crushed or broken stone shall be hard, durable, and free from excess flat, elongated, soft, and disintegrated graded particles, dirt, and other deleterious material.

Government of Nepal
Ministry of Urban Development
Department of Water Supply and Sewerage Management Office
Butwal, Kupandol
Office Chief

The coarse aggregate shall conform to the gradings given in Table 2.12.

Table 2-10: Grading Requirements of Coarse Aggregates

Sieve Size (mm)	Per cent Passing by Weight		
	Grading 1	Grading 2	Grading 3
125	100	-	-
90	90 – 100	100	-
63	25 – 60	90 – 100	100
53	-	25 – 75	95 – 100
45	0 – 15	0 – 15	65 – 90
22.4	0 – 5	0 – 5	0 – 10
11.2	-	-	0 – 5

Screenings - Screenings to fill voids in the coarse aggregate shall generally consist of the same material as the coarse aggregate. However, predominantly non-plastic crushed rock fines or natural angular pit sand may also be used for this purpose provided the liquid limit and plasticity index of such material are below 20 and 6 respectively and the fraction passing 0.075 mm sieve does not exceed 10 percent.

Screenings shall conform to the grading set forth in Table 2.13. Type A screening shall be used with Grading 1 and 2 coarse aggregates. Type B screening shall be used with Grading 2 and 3 coarse aggregates.

Table 2-11: Grading for Screenings

Sieve Size (mm)	Per cent Passing by Weight	
	Type A	Type B
13.2	100	-
11.2	95 – 100	100
5.6	15 – 35	90 – 100
0.180	0 – 10	15 – 35

2.10.3.2.4 Prime Coat

The prime coat shall consist of a medium curing cut-back bitumen complying with IS 217-1961 from a source approved by the Engineer.

2.10.3.2.5 Asphaltic Concrete

(a) Coarse Aggregate

Coarse Aggregate is defined as all material retained on a No. 12 U.S. Sieve (No. 10 B. S. 1.68 mm). It shall consist of broken stones or crushed gravel. It shall be of reasonably uniform quality throughout, clean, free from dust, and flat or elongated pieces. Rock and gravel shall have a per cent of wear in the Los Angeles Abrasion Test (500 revolutions) not exceeding 50 for base or intermediate coarse material or 40 for surface coarse material. The aggregate shall fall within the grading limits set out in Table 2.14. Material passing the No. 10 U. S. Sieve and retained on a No. 200 U. S. Sieve shall in laboratory tests and for the purpose of proportioning the mixture be treated as Fine Aggregate. In a like manner, material passing the No. 200 Sieve shall be considered as mineral filler. Should the coarse aggregate material and the fine aggregate material contain so little material between the No. 4 and No. 10 sieve that upon combination of the two the resulting percentage of this fraction is less than the minimum specified Table 2.15 such deficiency shall be made up by the addition of stone screenings or coarse sand of the appropriate particle size.

Table 2-12: Asphaltic Concrete, Grading Limits of Coarse Aggregate

U.S. Sieve Size		Mix Number and Percent Passing by Weight				
Inches	mm. Approx.	I	II	III	IV	V
2 ½"	63.5	100				
2"	51	95-100	100			
1½"	48	-	95-100	100		
1"	25	25-70	-	90-100	100	
¾"	19	-	35-70	-	90-100	100
½"	13	10-30	-	25-60	-	90-100
3/8"	9.5	-	10-30	-	20-55	40-75
No. 4	6.5	0.15	0.15	0.15	0.15	0.15
No. 10	1.5	0-5	0-5	0-5	0-5	0-5

Government of Nepal
Ministry of Infrastructure Development
Department of Water Supply and Sewerage Management
Water Supply and Sewerage Management Office
Office Chief

(b) Fine Aggregate

Fine aggregate is defined as all material passing the No. 10 and retained on the No. 200 sieve. It shall consist of sand or stone screenings, or a mixture of the two, composed of clean, tough, rough surfaced grains, free from clay, loam and other foreign matter, together with particles which pass a No. 10 sieve which may be contained in the Coarse Aggregate material. As delivered to the mixer it shall be free of lumps or loosely bonded aggregations. The grading shall fall within the limits set out in Table below.

Table 2-13: Asphaltic Concrete, Grading Limits of Fine Aggregate.

U.S. Sieve Size		Percent by Weight
PASSING	RETAINED	
No. 4	-	98-100
No. 4	No. 10	0-15
No. 10	No. 40	15-50
No. 40	No. 80	30-60
No. 80	No. 200	15-40
No. 200	-	0-5

(c) Mineral Filler

Mineral filler is defined as all material passing the No. 200 sieve. It shall consist of thoroughly dry limestone dust, cement or other mineral dust approved by the Engineer. As delivered to the mixer it shall be free from lumps and loosely bonded aggregations. The grading shall fall within the limits set out in Table 2.16.

Table 2-14: Asphaltic Concrete, Grading Limits of Mineral Filler

U.S. Sieve Size	Percent Passing by Weight
No. 30	100
No. 100	Not less than 85
No. 200	Not less than 65

Material retained on the No. 200 sieve shall be considered as Fine Aggregate for the purposes of grading analysis and mix proportioning.

(d) Binder

The Binder shall be straight run bitumen of 80-100 penetration complying with IS 73-1961.

Samples of the bituminous materials that the Contractor proposes to use, together with a statement as to their source and character shall be submitted and approved before use of such material. The Contractor shall require the manufacturer or producer of the bituminous materials to furnish material subject to this and all other pertinent requirements of the Contract. Only satisfactory materials, so demonstrated by service tests, shall be acceptable.

The Contractor shall furnish vendor's certified test reports for each load of bituminous material shipped to the Project. The report shall be delivered to the Engineer before permission is granted for use of the material. The furnishing of the vendor's certified test report for the bituminous material shall not be interpreted as basis for final acceptance. All such test report shall be subject to verification by testing samples of materials received for use on the Project.

2.10.3.2.6 Chippings

Chippings/Cover aggregate for surface dressing specified in the relevant items of the Bill of Quantities shall be obtained from a source approved by the Engineer and shall be natural screened gravel or crushed hard rock/stone, clean and free from adhering dust, achieved by washing and drying, or any other detrimental substance that could impair the adhesion of bitumen. The size of the chippings shall be as specified in the relevant item in the Bill of Quantities.

The flakiness index and elongation index of the chippings, when tested in accordance with B.S. 812, shall not exceed 40. The aggregate crushing value (ACV), when tested in accordance with B.S. 812, shall not exceed 35. The Los Angeles abrasion value (LAV) of the chippings shall not exceed 40.

Cover aggregates/Chippings shall be stockpiled in their separate sizes on a clear hard well drained area. The stockpiles shall be covered with tarpaulins or other suitable cover during periods when rain is expected. Grading of the chippings shall be as specified in the Table 2.17.

Table 2-15: Grading Requirements of Chippings

Sieve Size mm	Percentage Passing for nominal chippings size			
	20 mm	14 mm	10 mm	6 mm
28	100	-	-	-
20	85 – 100	100	-	-
14	0 - 25	85 - 100	100	-
10	0 - 7	0 - 25	85 - 100	100
6.3	-	0 - 7	0 - 20	85 - 100
4.75	-	-	0 - 10	-
4.0	-	-	-	0 - 20
2.80	0 - 2	0 - 2	0 - 2	0 - 10
0.075	0 - 1.5	0 - 1.5	0 - 1.5	0 - 1.5

2.10.4 Construction Equipment

2.10.4.1 General

The relevant requirements of Clause 2.2.4 shall apply.

2.10.4.2 Mixing Equipment

The mixing equipment to be used for asphaltic concrete shall be approved by the Engineer. The Contractor shall provide such attendance, access to the equipment and testing facilities as the Engineer may require at any time for the verification of the weights or proportions, character of materials and determination of temperatures used in the preparation of the mixture. The binder shall be heated to a temperature of 150°C (302°F) at the equipment.

2.10.4.3 Binder Distributors

Distributors shall be of constant volume or preferably constant pressure type, self-propelled, equipped with pneumatic tyres and have a minimum binder capacity of 4000 litres and each machine shall require the approval in writing of the Engineer for use in constructing the Works.

Distributors shall be equipped with low range speedometer (fifth wheel) in good working condition, so located to be visible to the driver to enable him to maintain accurately the constant speed for spraying binder at the uniform specified rate. They shall be fitted with either a calibrated pressure gauge which accurately records the pressure of the bitumen at the spray bar for constant pressure distributors, or a binder pump delivery meter for constant volume distributors. Binder pumps shall be capable of maintaining constant pressure or constant volume during spray runs.

Distributors shall be fitted with burners in combination with a circulating pump capable of maintaining the bitumen without overheating within the specified temperature range and an accurately calibrated thermometer for indicating the spraying temperature of the bitumen.

The spray bar shall be capable of applying bitumen binder to a minimum width of 2.30 meters with provision for application of lesser widths by closing jets. The spray bar shall have the capability of being raised and lowered to specified heights above the road and of being adjusted so that it is parallel with the road surface. The distributors shall be so designed to allow the circulation of hot binder through the spray bar when not spraying.

Spray bars shall be fitted with either slotted spray jets or preferably whirling spray jets, whose essential features are the ability to spray binder uniformly at the specified rate of spray, such that the speed of the distributor can be matched by the following chipping spreader during its normal chip spreading operation. If whirling spray jets are fitted the spray bar shall be protected by a hood to reduce wind interference. Distributors shall be fitted with hand-lances with nozzle spray attachments for spraying small, inaccessible areas and to correct deficiencies in the spray rate.

Prior to surface dressing operations, distributors shall be checked for leakages from spray jets and any other sources and these shall be eliminated. Distributors shall then be calibrated by a method approved by the Engineer and under his supervision, to establish uniformity of lateral spray of bitumen to within ±10% permitted variation at any point on the surface from the mean spray rate. This calibration includes setting the spray bar height above the surface to be sprayed, in accordance with the manufacture's instructions, so as to ensure that the designed overlap of jets is achieved. All spray jets shall be functioning so that each jet requirement has been achieved. Calibration shall be undertaken in accordance with the manufacturer's instructions or in accordance with TRRL-ORN 3 - Section 6.3 Distributor Speed Control and Calibration - to establish the relationship between spray rate and road speed for constant pressure distributors and in addition, bitumen pump delivery rate and spray bar width for constant volume distributors. The distributors shall be

capable of achieving a mean spray rate measured by the TRRL ORN 3 Method B, which shall not vary by more than 5% from the specified spray rate.

Chip-spreaders: Mechanical chip-spreaders shall be capable of spreading the chippings uniformly over variable widths, from 0.5 to 3.5 m, at the rates specified.

The number and output of chip-spreaders shall be sufficient to ensure that chippings are spread immediately after the bituminous binder has been applied. Chip-spreaders shall be checked and calibrated before starting any work or when required by the Engineer.

Rollers: The main rolling shall be carried out with self-propelled pneumatic tyred rollers, having a wheel-load of more than 2 tonnes. The tyres shall be smooth and their pressure shall be more than 0.4 N/mm2.

The number and output of rollers shall be sufficient to ensure that rolling does not lag behind spreading. To the extent possible, at least two pneumatic tyred rollers shall be used for each chip-spreader.

Miscellaneous Equipment: Sufficient trucks and loading machinery shall be employed to ensure an adequate, prompt and continuous supply of chippings. Rubber tyred mechanical rotary brooms towed by or mounted on rubber tyred vehicles shall be provided. Tractor toed air compressor with sufficient length of hose pipes and air jet nozzle shall be provided to ensure sufficient cleaning of surface to be sprayed with bituminous layers

2.10.5 Construction and Workmanship

2.10.5.1 General

With regard to safety, existing services, nuisance, dealing with traffic etc., the relevant requirements of Clause 2.2.5 shall apply. With regard to site clearance and stripping of site, the relevant requirements of Clauses 2.1 and 2.2 shall apply.

The subgrade and sub-base shall be kept continuously drained and any damage caused by water accumulating on or running off the surface shall be made good at the Contractor's expense.

Should water accumulate on any part of the subgrade or subbase, the Contractor shall remove and dispose of any material which becomes saturated, or cannot then be compacted to the required density, and shall replace it to specification, all at his own expense.

2.10.5.2 Compaction

Before commencing construction and from time to time as may be considered necessary by the Engineer, the Contractor shall carry out compaction trials in the presence of the Engineer on each main type of materials to be compacted in the Works. He shall carry out all necessary laboratory and field tests and supply the Engineer with full copies of the results of all tests.

Following completion of the compaction trials, the Contractor shall submit to the Engineer, for his approval, proposals for the compaction of each main type of material. The Contractor's proposals shall include reference to the type of equipment, the operating weights, and the method of adjusting moisture content.

If, in the opinion of the Engineer, the results of the compaction trials indicate that the Contractor's proposed equipment and methods will achieve the densities specified, the Engineer will approve the same. Otherwise the Contractor shall submit in writing proposals for modifying the equipment and/or methods and shall, if the Engineer so requires, compact further trials in accordance with these modified proposals until the Engineer approves the Contractor's proposals.

2.10.5.3 Cut and Borrow

Cut and borrow shall be carried out in accordance with Clause 2.2.5.2

All cuts carried below the designated level or the bottom of the subbase shall be backfilled with suitable material that has a CBR of at least 7% and compacted at the Contractor's own expense. The Contractor shall conserve all suitable material and shall not borrow, spoil, or waste any material without approval of the engineer.

2.10.5.4 Formation of Embankment

This work shall consist of the construction of embankment and other areas of fill and backfill not specified elsewhere by providing, placing, compacting and shaping suitable material of acceptable quality obtained from approved sources and to the lines, levels, grades, dimensions and cross-sections on the drawings or as required by the Engineer.

Prior to placing any embankment upon any area all clearing and grubbing activities shall be completed in accordance with Clause 2.1. Topsoil shall be removed and stockpiled for later use. Prior to the placing of any materials for formation of the embankment, the sub-grade after removal of top soil shall be leveled to a specified grade as per the drawing or the engineers instructions and the top 15 cm shall be watered if necessary and compacted to 93% of the modified AASHTO maximum dry density.

All earthwork material placed in or below embankments, below formation level in cuttings or elsewhere in the Works shall be deposited and compacted in layers of thickness appropriate to the compaction equipment and confirmed by the compaction tests. The embankment materials shall be compacted to a minimum 93% of modified AASHTO maximum dry density and to 95% in the top 30 cm below formation or sub-grade level.

Isolated boulders each within the range 0.05 cubic meter to 0.1 cubic meter in size may be incorporated in embankments not of rock fill at the discretion of Engineer provided that the specified compaction requirements are met and no stone exceeding 0.05 cubic meter shall be placed less than 1 meter below formation level of carriageway or hard shoulder.

Rock used in rock fill embankments shall except for any specified external cover to slopes or near formation level, be of such size that it can be deposited in horizontal layers each not exceeding 450 mm in loose depth and extending over the full width of the embankment. Material shall be spread and levelled by a crawler tractor weighing not less than 15 tonnes and compacted as specified above. Each layer shall consist of reasonably graded rock and all surface voids shall be filled with broken fragments before the next layer is placed. The top surface and side slopes of embankments so formed shall be thoroughly blinded with approved fine graded material to seal the surface. Such material on side slopes and verges shall be top soil.

All materials used in embankment and filling elsewhere shall be compacted as soon as practical after deposition

Hand compaction shall be allowed only on restricted areas.

2.10.5.5 Sub-base and Gravelling

The material shall be deposited in such quantity and spread in a uniform layer across the full width required, so that the final compacted thickness is nowhere less than shown on the Drawings or instructed by the Engineer. Every reasonable effort shall be made to prevent segregation after mixing and during the dumping, spreading, trimming, and compacting operation.

The compacted thickness of any layer laid, processed, and compacted at one time shall not exceed 150 mm and where a greater compacted thickness is required, the material shall be laid and processed in two or more layers. The minimum layer thickness shall be 80 mm.

The material shall be broken down to the grading specified in Table 2.10. Any oversize material which cannot be broken down to the required size shall be removed and disposed of.

The material shall be scarified and the moisture content adjusted by either uniformly mixing in water or drying out the material such that the moisture content during compaction is between 95% and 100% of the Optimum Moisture Content. It shall be graded and trimmed to final line and level. Light compaction may be applied before the final trim is carried out but once 25% of the compaction has been applied no further trimming or correction of surface irregularities will be allowed.

The final trim shall be in cut and the Contractor shall ensure that material from the trim is neither deposited in low areas nor spread across the section but graded clear of the Works. Following the final trim the material shall be compacted to a dry density of at least 95% of modified AASHTO maximum dry density. During the grading, trimming and compaction of the material the Contractor shall ensure that the surface and/or the material does not dry out by applying fog sprays of water or other approved means sufficient to maintain the surface and/or material within the specified limits of moisture content.

On completion of compaction, the surface shall be well closed, free from movement under compaction equipment, and free from compaction planes, ridges, cracks, loose or segregated material.

2.10.5.6 Water Bound Macadam Base

2.10.5.6.1 General

This Clause covers the construction of base course from clean, crushed aggregates mechanically interlocked by rolling and bonded together with screening material and water laid on a properly prepared sub-base and finished in accordance with the requirements of these specifications and in close conformity with the lines, grades, cross sections and thickness as per approved plans or as directed by the Engineer.

2.10.5.6.2 Preparation of Base

The surface of the sub-base base to receive the water bound macadam course shall be prepared to the specified lines and crossfall and made free of dust and other extraneous material. Any ruts or soft yielding places shall be corrected in an approved manner and rolled until firm surface is achieved. Sub-base/base surface irregularities, where predominant, shall be made good by providing appropriate type of profile corrective course.

2.10.5.6.3 Spreading Coarse Aggregates

The coarse aggregates shall be spread uniformly and evenly upon the prepared sub-base to proper profile by using templates placed across the road about 6 m apart, in such quantities that the thickness of each compacted layer is not

greater than 100 mm for Grading 1 coarse aggregate and 75 mm for Grading 2 and 3 coarse aggregates (Table 2.12). Aggregates placed at locations which are inaccessible to the spreading equipment, may be spread in one or more layers by any approved means so as to achieve the specified results.

The spreading shall be done from stockpiles along the side of the roadway or directly from vehicles. In no case shall the aggregates be dumped in heaps directly on the surface prepared to receive the aggregates nor shall hauling over uncompacted or partially compacted base be permitted. No segregation of large or fine particles shall be allowed and the coarse aggregate as spread shall be of uniform gradation with no pockets of fine material.

The surface of the aggregates spread shall be carefully checked with templates and all high or low spots remedied by removing or adding aggregates as may be required. The surface shall be checked frequently with a straight edge while spreading and rolling so as to ensure a finished surface as per approved plan.

The compacted thickness of any layer laid, processed and compacted at one time shall not exceed 150 mm and when a greater compacted thickness is required, the material shall be laid and processed in two or more layers. The minimum layer thickness shall be 80 mm.

2.10.5.6.4 Rolling

Immediately following the spreading of the coarse aggregate, rolling shall be started with vibrator rollers of 12 to 20 ton capacity of approved type.

Except on super elevated portions where the rolling shall proceed from inner edge to the outer, rolling shall begin from the edges gradually progressing towards the center. First the edge/edges shall be compacted with roller running forward and backward. The roller shall then move inwards parallel to the centerline of the road, in successive passes uniformly lapping preceding tracks by at least one half widths.

Rolling shall be discontinued when the aggregates are partially compacted with sufficient void space in them to permit application of screenings. During rolling, slight sprinkling of water may be done, if necessary. Rolling shall not be done when the sub-grade is soft or yielding or when it causes a wave-like motion in the sub-grade or sub-base course.

The rolled surface shall be checked transversely and longitudinally, with templates and any irregularities corrected by loosening the surface, adding or removing necessary amount of aggregates and re-rolling until the entire surface conforms to desired crossfall and grade. In no case shall the use of screenings be permitted to make up depressions.

Material which is crushed excessively during compaction or becomes segregated shall be removed and replaced with suitable aggregates.

The minimum dry density to be achieved as a percentage of the Maximum Dry Density (MDD) determined in accordance with IS 2720 Part 8 shall be 98% of MDD.

2.10.5.6.5 Application of Screenings

After the coarse aggregate has been rolled as above, screenings to completely fill the interstices shall be applied gradually over the surface. These shall not be damp or wet at the time of application. Dry rolling shall be done while the screenings are being spread so that vibrations of the roller cause them to settle into the voids of the coarse aggregate. The screenings shall not be dumped in piles but be spread uniformly in successive thin layers either by the spreading motions of hand shovels or by mechanical spreaders, or directly from tipper with suitable grit spreading arrangement. Tipper operating for spreading the screenings shall be so driven as not to disturb the coarse aggregate.

The screenings shall be applied at a slow and uniform rate (in three or more applications) so as to ensure filling of all voids. This shall be accompanied by dry rolling and brooming with mechanical brooms, hand-brooms or both. In no case shall the screenings be applied so fast and thick as to form cakes of ridges on the surface in such a manner as would prevent filling of voids or prevent the direct bearing of the roller on the coarse aggregate. These operations shall continue until no more screenings can be forced into the voids of the coarse aggregate.

The spreading, rolling, and brooming of screenings shall be carried out in only such lengths of the road which could be completed within one day's operation.

The final trim shall be in cut and the Contractor shall ensure that material from the trim is neither deposited in low areas nor spread across the section but graded clear of the Works. During the grading, trimming and compaction of the material the Contractor shall ensure that the surface and/or the material does not dry out by applying fog sprays of water or other approved means sufficient to maintain the surface and/or material within the specified limits of moisture content.

2.10.5.6.6 Sprinkling of Water Grouting

After the screenings have been applied, the surface shall be copiously sprinkled with water, swept and rolled. Hand brooms shall be used to sweep the wet screenings into voids and to distribute them evenly. The sprinkling, sweeping and rolling operation shall be continued, with additional screenings applied as necessary until the coarse aggregate has been thoroughly keyed, well-bonded and firmly set in its full depth and a grout has been formed of screenings. Care shall be

taken to see that the base or sub-grade does not get damaged due to the addition of excessive quantities of water during construction.

Government of Nepal
Ministry of Urban Development
Department of Water Supply and Sewerage Management
Water Supply and Sewerage Management Office
Butwal, Rupandehi
Office Chief

2.10.5.6.7 Setting and Drying

After the final compaction of water bound macadam course, the pavement shall be allowed to dry overnight. Next morning hungry spots shall be filled with screenings as directed, lightly sprinkled with water if necessary and rolled. No traffic shall be allowed on the road until the macadam has set. The Engineer shall have the discretion to stop hauling traffic from using the completed water bound macadam course, if in his opinion it would cause excessive damage to the surface.

The compacted water bound macadam course should be allowed to completely dry and set before the next pavement course is laid over it.

2.10.5.7 Prime Coat

2.10.5.7.1 General

A Bituminous Prime Coat shall consist of an application of bituminous material on the prepared non-bituminous surface like base course, shoulder, before any further bituminous layers are applied in accordance with this specification, applied at the rate specified below or any modification instructed by the Engineer.

2.10.5.7.2 Weather

The prime coat shall be applied only when the existing surface is dry or sufficiently low in moisture to assure uniform distribution of the bituminous material, when the atmospheric temperature is above 15°C, and when the weather is not foggy or rainy. The temperature requirements may be waived, but only when so directed by the Engineer.

2.10.5.7.3 Application

The amount of bituminous material for the prime coat shall be 1.0 kg/m2 (net bitumen) or as directed by the Engineer. Prior to the application of prime coat to any area of the Permanent Works, the Contractor shall carry out trials to determine the rates of spread of binder. In the course of such trials by the Contractor the Engineer may amend the rate of spread of binder.

Immediately before applying the prime coat, the full width of the surface to be primed shall be swept with a power broom or other method approved by the Engineer to remove all loose dirt and other objectionable materials.

The application of the bituminous material shall be made by means of a pressure distributor at the temperature, pressure and in the amount directed by the Engineer. The application temperature shall be generally in the range of 50-60° C for MC-30 and 65-80° C for MC-70.

Following the application, the primed surface unblinded shall be allowed to cure, as agreed with the Engineer, without being disturbed. If after 24 hours the asphalt prime is not absorbed, sand shall be applied to blot up excess asphalt until the primed surface will not be picked up by traffic or equipment. Blotting material, where required, shall be to the approval of the Engineer and shall consist of clean, dry sand free from cohesive material and containing no organic matter. Blotting material shall not be paid for as a separate item. This period shall be determined by the Engineer. The surface shall then be maintained by the Contractor until the surfacing has been placed. Prime coated surfaces damaged by traffic shall be repaired by the Contractor without additional payment, in a manner instructed by the Engineer. Suitable precautions shall be taken by the Contractor to protect the primed surface against damage during this interval, including supplying and spreading any sand necessary to blot up excess bituminous material.

The depth of penetration shall be about 3 – 10 mm and the quantity sprayed shall be such that the surface is dry within a few hours.

For minor activities or small areas of surfacing failures where the size of the activities does not justify using a bitumen distributor, manual application of binder using watering cans, hand pumps and lances shall be used with the approval of the Engineer.

2.10.5.8 Asphaltic Concrete

2.10.5.8.1 Characteristics of Asphaltic Concrete Mixtures

The mixture of mixes to be used shall meet the requirements set out in Table 2.18 for proportions of coarse aggregate, fine aggregate, mineral filler and binder. The mix property shall meet the requirements set in Table 2.19. The Contractor shall carry out such tests of mix composition as the Engineer shall require to determine the precise proportions of the various materials to be used in the mix. After completion of these tests the Engineer shall specify or approve a job mix coming within the limits in Table 2.18 for each type of mix selected, which in his judgment will be suitable. Unless specifically permitted by the Engineer in writing the maximum permissible variations from the job mix shall be as set out in the Table 2.20.

Office Chief

2.10.5.8.2 Approval of Materials

Prior to use the Contractor shall supply the Engineer with samples of all materials proposed to be used. He shall carry out such tests as the Engineer may require satisfying himself that the materials and proportions satisfy this Specification. No materials shall be used nor job mix adopted until approved in writing by the Engineer.

2.10.5.8.3 Mixing

The aggregate shall be dried and heated at the equipment so that when delivered to the mixer it shall be at as low a temperature as is consistent with proper mixing, transport without binder segregation, and proper laying and in no case will exceed 163°C (325°F).

2.10.5.8.4 Transporting, Laying and Compacting

The mixture shall be transported, laid and compacted to the satisfaction of the Engineer. The temperature of the mixture at the time of rolling shall be not less than 90°C.

Table 2-16: Asphaltic Concrete, Mix Proportions

Courses for which recommended			Base or Intermediate		Intermediate Surface		
Mix Number			I	II	III	IV	V
Minimum Thickness			75 mm	63 mm	50 mm	38 mm	25 mm
Maximum Thickness			90 mm	90 mm	76 mm	63 mm	51 mm
Aggregate and Filler Combination							
	Passing U. S. Sieve	Retained U. S. Sieve	Percent by Weight				
Coarse Aggregate	2"	1"	15-45	-	-	-	-
	1½"	¾"	-	14-48	-	-	-
	1"	½"	3-45	-	17-52	-	-
	¾"	3/8"	-	3-45	-	18-50	-
	½"	No. 4	-	-	6-42	-	-
	3/8"	No. 4	-	-	-	3-36	8-45
	No. 4	No. 10	5-15	5-15	5-15	9-22	9-27
Sub Total	-	No. 10		60-80	55-70	50-65	50-65
Fine Aggregate	No. 10	No. 40	3-19	3-21	4-20	5-22	5-22
	No. 40	No. 80	5-22	6-25	8-25	9-27	9-27
	No. 80	No. 200	3-15	3-16	4-16	5-18	5-18
Filler	No. 200	-	3-5	4-6	4-7	5-8	5-8
Sub Total	No. 10	-	20-40	25-45	30-45	35-50	35-50
Total Aggregate and Filler			100	100	100	100	100
Total Mix							
Total Aggregate and Filler			93.5	93.0	93.0	92.0	92.0
			95.5	95.0	95.0	94	94
Binder			4.5-6.5	5.0-7.0	5.0-7.0	6.0-8.0	6.0-8.0
Total Mix			100	100	100	100	100

Table 2-17: Mix Property Requirements

Mix Property	Property Limits
Effective Bitumen Content	Min. 6.8%
Absorbed Bitumen Content	Min 0%; Max. 1.7%
Total Actual Bitumen Content	Min 7.3%
Air Void Content	Min 3%; Max 6%
Bitumen Film Thickness	Min 8 micron
Marshall Quotient (AASHTO T 245-78)	Min 1.0 kN/mm; Max 4.0kN/mm
Marshall Stability (AASHTO T 245-78)	Min 450 kg; Max 850 kg
Retained Marshall Stability after soaking 24 hours at 60°C	Min 75%

Government of Nepal
Ministry of Infrastructure Development
Department of Water Supply and Sewerage Management Office
Butwal, Kupandehi
Office Chief

Table 2-18: Asphaltic Concrete, Permissible Variations from Job Mix

U. S. Sieve Size		Mix Number				
Passing	Retained	Percentage variation by weight plus or minus				
		I	II	III	IV	V
2"	1"	5	-	-	-	-
1½"	¾"	-	5	-	-	-
1"	½"	5	-	5	-	-
¾"	3/8"	-	5	-	5	-
½"	3/8"	-	-	-	-	5
½"	No. 4	5	-	5	-	-
3/8"	No. 4	-	3	-	5	5
No. 4	No. 10	3	3	3	3	3
No. 10	No. 200	2	2	2	2	2
No. 200	-	1	1	1	1	1
Binder	-	0.3	0.3	0.3	0.3	0.3

2.10.5.9 Surface Dressing Work

2.10.5.9.1 Rate of Application of Binder

The rate of spray of binder and the size and rate of spread of chippings shall be as specified in clause no. 2.10.5.9.4 below or as instructed by the Engineer.

Tray tests shall be carried out at least twice per run during surface dressing operations to check spray and spread rates calculated from spray truck chippings and chip-spreader coverage, and more frequently when a number of short lengths are being surface dressed. Spray truck dipping and chip-spreader coverage shall be checked for each length sprayed.

2.10.5.9.2 Safety and Maintenance

Bitumen heating, pumping and spraying operations shall be entrusted only to personnel who have been adequately trained and who are competent in the use of the equipment. Unauthorized personnel shall not be allowed to remain in the vicinity during the above operations. Authorized personnel shall be provided with, and be required to wear, suitable protective clothing, i.e. overalls, heat-proof gloves, boots, helmets and goggles.

Special care is needed when changing the type of binder being used in the distributor. When changing from hot binders to bitumen emulsions, all residual binder in the tank and spraying system shall be drained completely and the spraying system flushed using diesel. When changing from emulsions to hot binders, all emulsion shall be drained/flushed from the distributor in order to avoid foaming when hot binder is loaded. When it is necessary to load hot binder after using the distributor for spraying cutback bitumen, the cutback bitumen shall be drained completely and the manhole left open for some time to allow solvent vapour to escape.

The spray bar shall be emptied of binder by blowing with air, or by diesel flushing when spraying is suspended for lengthy periods and at the end of each day's work.

The binder shall be introduced into the distributor at a temperature equal to or just above the spraying temperature after preheating in separate tanks fitted with burners and circulating pumps for this purpose. The capacity of the decanters/preheating tank shall be sufficient to preheat the binder required for the full day's work.

The distributor burners shall be used only to make relatively small adjustments to the binder temperature and shall not be used to raise the binder from ambient to spraying temperature. Under no circumstances shall distributor burners be operated during the spraying operation, or when the level of binder in the tank is less than 150 mm over the top of the flues, or when the distributor is moving. The need for end of day maintenance of the distributor is emphasised to reduce fire risk and to ensure its adequate performance when next used for binder application.

Maintenance of all equipment for the surface dressing operation shall be under the control of a competent senior mechanic, approved by the Engineer and fully experienced in the maintenance of all equipment and in the calibration of the bitumen distributor.

The Contractor shall provide all necessary traffic control equipment and shall inform the engineer at least 14 days before commencing the surface dressing Work, of his detailed arrangements for traffic control. After review the Engineer will

inform the Contractor in writing of his approval, subject to any modifications to the Contractor's arrangements which he requires for traffic and convenience of the public.

Government of Nepal
Ministry of Urban Development
Department of Water Supply and Sewerage Management
Water Supply and Sewerage Management Office
Butwal, Rupandehi
Office Chief

2.10.5.9.3 Preparation of Surface

If the surface to be treated contains holes or depressions, which in the opinion of the Engineer require treatment such irregularities shall be repaired by removal of all loose and defective material and replacement with a patching mixture compatible with the surrounding surface or other material approved by the Engineer, which shall be compacted to produce a right surface conforming with the adjacent area. Irregularities which impair the riding qualities of the underlying surface shall be corrected as instructed by the Engineer.

Immediately before spraying, all loose material and foreign matter shall be removed by thorough brushing with mechanical brooms and/or washing or by use of compressors or by other methods acceptable to the Engineer. All hardened mud or other foreign matter shall be loosened by scraping before sweeping. The debris shall be deposited well clear of the surface to be sprayed. Road furniture (manholes covers etc.) shall be covered with adhesive paper or similar materials. Kerb stones, roadside, and any other objects what shall not benefit from binder spray shall be protected in a manner approved by the Engineer.

2.10.5.9.4 Application of Surface Dressing

a) Application of Binder

The specified bitumen binder, cut back if instructed by the Engineer, its application rate and spraying temperature shall be instructed by the Engineer on Site after design of the surface dressing, in accordance with the procedures set out in Chapter 5 of TRRL-ORN 3. The range of spraying temperature for binders is given in TRRL-ORN 3, and is normally within the range 140°C to 200°C.

The Contractor shall present his detailed programme and arrangements and methods for the planning and execution of the surface dressing process to the Engineer for approval at least 28 days before he intends to commence this Work. The Contractor's authorized representative shall be responsible for preparation of the programmes and arrangements and the Contractor shall not commence surface dressing until the Engineer has approved his programme.

The Contractor shall base his programme on TRRL-ORN 3 - Section 7. The Surface Dressing Process, Sub-Section 7.1 Planning and 7.2 The Surface Dressing Operation - by selecting the activities appropriate to his particular Work Programme. The Contractor shall appoint a surface dressing overseer approved by the Engineer who shall be fully competent to organize and implement the surface dressing operation with experience in operating all essential equipment.

All operations associated with the surface dressing process shall be described in the Contractor's arrangements and shall include but not be limited to:

- method of bitumen supply, decanting, cutting back where required, heating and storing, transfer to distributor including lists of equipment and capacities;
- location and method of production of cover aggregates and pre-coating with type and output of equipment, including crushers where appropriate; and.
- method of performing the surface dressing process including type and capacity/weight of all main and ancillary items of equipment along with workforce details.

The Contractor shall provide, one day in advance, his following day's surface dressing Work Programme, including his expected spray lengths and widths for each run with details of the quantity of cover aggregate available in approved chip spreaders standing by at the commencement of the spray run. Spraying shall not commence until sufficient cover aggregate is in this position to cover the area programmed for spraying.

The distributor shall be filled with preheated bitumen binder on the same day, shortly before start of binder application. The distributor spray bar and jets shall be preheated by circulating hot binder and the jets operated for at least 10 seconds for testing. This operation shall be carried out before each spray run, off-road onto trays, or at a location where no environmental damage will be created. Jets shall be inspected by the Engineer for shape, direction, blockage or any other defects which shall be corrected before spraying is permitted. At the end of each spray run the distributor shall be driven off-road to avoid binder drippage on the pavement surface. Binder drippage from any location which may contaminate the road surface shall be sufficient for the Engineer to order removal of the offending source from the roadway until repairs are completed.

As emergency/temporary measures, drip protection of the pavement surface shall be provided by use of buckets/trays etc. These shall be available for use at all times, along with equipment for removal of binder spillages on the pavement surface, to the approval of the Engineer.

The Contractor shall carry out a trial section of surface dressing at a location instructed by the Engineer to demonstrate to the Engineer that his surface dressing operation is capable of constructing the surface dressing in accordance with the

Specification. The trial length shall be minimum 200 meters using full spray bar width with full width application of cover aggregate. If the trial section of surface dressing complies with the Specification, the Contractor shall receive payment for the Work in accordance with the Contract as if it were Permanent Work. If the trial section of surface dressing fails to comply with the Specification, the Contractor shall carry out further trials until his surface dressing operation complies with the Specification. No payment will be made for trial sections that do not comply with the Specification.

When the Engineer is satisfied that the Contractor is capable of constructing surface dressing that complies with the Specification after trial section or sections, the Contractor will receive permission to commence surface dressing as permanent Work on the road pavement.

Application of binder shall only be undertaken when the surface is dry or slightly damp, but in no circumstances when wet. If in the opinion of the Engineer rainfall is likely before the application of binder or cover aggregate or the temperature or the pavement surface has time to fall below the specified minimum temperature of 15°C, the Engineer will instruct the Contractor to delay surface dressing work until weather conditions are satisfactory. Areas damaged by rainfall shall be rectified by the Contractor without additional payment, in a manner instructed by the Engineer.

If in the opinion of the Engineer the ambient temperature is too cold for surface dressing, the Contractor shall delay this operation until the temperature increases to the specified minimum level of 15°C.

Building paper or other approved protective material shall be used at the start and finish of each spray run of sufficient width (not less than 600mm) to enable the distributor to reach its calibrated road speed with spray jets open before discharging binder onto the pavement under treatment. Ends of previous surface treatment runs shall be trimmed back to clean, straight transverse edges and these shall form the start point for subsequent runs, with completed work suitably protected as described above. Spray runs will be limited to 300 metres length initially until the Contractor demonstrates his ability to plan and execute longer lengths. Spray widths shall be calculated allowing for 150mm longitudinal overlap with adjoining passes and for the width that the following chipping spreader is able to cover. Longitudinal sprayed butt joints will not be permitted. The Contractor shall submit his spray width and length proposals to the Engineer for approval.

During spraying all passing traffic shall be stopped. If spray jets block, or the chipping spreader stops, or any other event occurs which may affect the surface treatment process, then the spray bar operator immediately shall stop spraying. When the defective equipment or operation is rectified, spraying may restart with the Engineer's approval.

To ensure that the spray runs are parallel with the road pavement the road centerline or edgeline shall be marked every 25 meters and a string line laid out for the distributor driver to follow with the guide bar attached to his side of the cab.

Where a second surface dressing is specified, the first surface dressing shall be left open to traffic for a minimum period of 21 days and preferably a longer period before applying the second surface dressing unless special approval is obtained from the Engineer for a shorter period. Surplus chippings shall be removed by firm hand-brooming or power- brooming before applying the second surface dressing.

The spraying widths shall be so selected that the centerline joint of the second surface dressing is offset from that in the first surface dressing by a minimum 300 mm.

Hand-pouring pots or hand-lances shall be used to touch up carefully any parts of the first surface missed by the distributor/chipping spreader, or for the treatment of areas in which the distributor cannot operate and in this case only, chippings may be applied by an approved manual method.

Areas damaged by excess bitumen or spillages of diesel or other deleterious material shall be repaired by careful cutting out and removal followed by careful hand-poured or hand-lance application of binder and chipping in a manner approved by the Engineer.

The second surface dressing shall be undertaken when the first surface has been approved by the Engineer after all surplus chippings are removed, repairs carried out and the surface thoroughly cleaned as specified. The procedures to be followed are those specified for Surface Dressing in this Specification.

b) Application of Cover Aggregate

The cover aggregate shall be applied at the rate instructed by the Engineer on Site in square metres of coverage per cubic metre of loose aggregate after design of the surface dressing, in accordance with procedures set out in Chapter 5 of TRRL-ORN 3.

The cover aggregate shall be applied immediately after the binder is applied and with the approval of the Engineer may be applied slightly damp if not pre-coated to depress dust and help adhesion. Aggregate applied to sprayed bitumen emulsion shall, however, be dry.

The cover aggregate shall be applied using approved mechanical spreaders, which shall be tailgate mounted on tipper trucks, pushed spreaders or self-propelled spreaders, specifically manufactured for the purpose and they shall preferably

be metered. They shall be capable of uniformly spreading cover aggregate at the instructed rate such that they can deliver the rate specified whilst travelling at the same speed as the binder distributors during spraying.

The bitumen binder surface shall be covered with cover aggregate closely packed in one layer so that adjacent chippings are touching and no bitumen binder is left uncovered.

A sufficient number of loaded spreaders shall be available at the start of binder application to provide cover aggregate over the whole area programmed for spraying. The Contractor shall not commence spraying unless sufficient loaded spreaders are in place. Aggregate spreading by manual methods will not be permitted except in circumstances where:

- mechanical spreaders cannot operate effectively or safely;
- additional aggregate (back-up work) is required;
- breakdown of mechanical spreaders occurs during the spreading operations before stoppage of spraying;
- minor surface repairs are instructed.

The spreader shall follow the distributor at an interval not exceeding 10m for hot binder work and not exceeding 5m when using bitumen emulsion binder. A back-up vehicle or other approved means shall be constantly in attendance during surface dressing, from which additional aggregate may be hand-applied to ensure complete and rapid coverage.

Where an adjoining pass of the distributor is required, no aggregate shall be applied to the binder over a 150 - 200 mm strip so as to permit subsequent overlap.

Under no circumstances will general brooming of the chipped surface be permitted. Aggregate spillage shall be removed with care and excess aggregates may be brushed off carefully after a minimum of 3 days under traffic, after approval of the Engineer.

The cover aggregate shall be rolled with pneumatic multi - tyred power rollers. Tyre pressures and sizes shall be in accordance with the manufacture's recommendations and shall be the same on each axle and tyres shall be smooth and in good condition to provide uniform rolling of chippings. The roller shall follow directly behind the spreader and shall continue to roll at a speed of approximately 8-10kph, so as to provide minimum 10 passes over the entire treated area. Excessive rolling, resulting the crushing of chippings, shall be avoided. Each pass shall overlap the previous pass by minimum half width of roller rolling shall be continued until all cover aggregate particles are firmly bedded. Tyres shall be in good condition and be kept clean and smooth to avoid pick-up of bitumen and chippings.

2.10.5.9.5 Aftercare and Control of Traffic

The road shall not be opened to traffic until the binder has attained sufficient viscosity to prevent the stones being whipped off.

The Contractor shall erect temporary traffic restriction signs, barriers and any other device, as instructed by the Engineer, to prevent vehicles traveling too fast over the newly laid surface dressing. Vehicle speed shall be restricted to a maximum of 30 km/h, until there is sufficient adhesion to ensure that the chippings shall not be dislodged by faster vehicles.

Where possible, the traffic shall be distributed across the road so as to obtain uniform polishing of the road surface.

After traffic has been permitted to run on the surface dressing for a period of at least two weeks and when instructed by the Engineer, all loose chippings shall be swept and taken away. Windrows of loose chipping shall not be allowed to accumulate at the sides of the road.

2.10.6 Tolerances

2.10.6.1 Embankments

The surface of the fill and selected layer shall be finished true to line and level to within the tolerances +10 mm and –30 mm.

The slopes of cuttings shall be trimmed to neat lines and to a standard that is generally attainable with proper care and workmanship in the type of material concerned. Fill slopes shall be finished to neat lines and all loose rocks and uncompacted material shall be removed. The finish shall be as smooth as is consistent with the nature of the material and good workmanship.

The degree of finish required for all earthfill slopes and for earthcut slopes of gradient less than 1:4 shall be that normally obtainable by motor grader or hand-shovel operations.

2.10.6.2 Sub base and Gravelling

The layer shall be set out and constructed to tolerances of +10 mm and –30 mm in surface level, ±25mm in thickness and ±200mm in width.

Government of Nepal
Ministry of Infrastructure Development
Department of Water Supply and Sewerage Management
Water Supply and Sewerage Management Office
Butwal, Rupandehi
Office Chief

2.10.6.3 Waterbound Macadam

Water bound macadam base shall be constructed to construction tolerances of ± 10 mm in surface level, ±25mm in thickness and ±200mm in width..

2.10.6.4 Prime Coat

The actual spray rate shall not deviate from the specified spray rate by more than 5 percent.

2.10.6.5 Asphaltic Concrete

On completion the surface level shall not deviate vertically from the true pavement surface by more than ± 8 mm.

2.10.7 Tests and Acceptance

Any materials or workmanship that do not comply with the specified requirements shall be removed and replaced with materials and workmanship complying with the specified requirements, or be repaired so that after being repaired it will comply with the specified requirements.

2.10.7.1 Embankments

Tests shall comply with Clause 2.2.6.

2.10.7.2 Sub Base and Gravelling

The minimum testing frequency that will be required for the purpose of process control shall be the following:

Tests	Testing Frequency	
	One Test Every	Min. No of Tests per km Or Specific Area
Materials:		
Gradation	200 m3	2
Plasticity Index	200 m3	2
Maximum Dry Density and Optimum Moisture Content	1000 m3 or every change in source	2
Field Density and Moisture Content	500 m3	2
CBR	1000 m3 or every change in source	2

Additional routine inspection and testing will be carried out to test the quality of materials and workmanship for compliance with the requirements of this section.

2.10.7.3 Waterbound Macadam

The minimum testing frequency that will be required for the purpose of process control shall be the following:

Tests	Testing Frequency	
	One test every	Min. No of Tests per km Or Specific Area
Materials:		
Plasticity Index	1000 m3	2
Gradation	200 m3	2
Flakiness Index	200 m3	2
Los Angeles Abrasion	1000 m3	-
Aggregate Impact Value	1000 m3	-

In addition routine inspection and testing will be carried out to test the quality of materials and workmanship for compliance with the requirements of this section.

2.10.7.4 Prime Coat

The actual spray rate shall be tested before the start of application of the prime coat and when required by the Engineer.

2.10.7.5 Asphaltic Concrete

The tests that will be required for purpose of process control shall be following:

a) Sieve analyses (wash method) for at least two samples of aggregate from each hot bin.
b) Sieve analyses (wash method) for at least two samples of the combined hot aggregate.
c) Temperature of mix when sampled at the mixing equipment and on the road (once per hour).

d) Density of Laboratory-compacted mix (Marshall Density) for at least two samples.

e) Compacted density and percentage compaction of the mix relative to the laboratory Marshall Density for at least two samples.

f) Marshall Stability and Flow and calculated Marshall Quotient, as defined in Table 2.18, for at least two samples.

g) Asphalt content and aggregate grading of mix as determined by bitumen extraction testing for at least two samples. When the centrifuge extraction method is used an ash correction shall be applied as required by AASHTO T 164 Cl 8.6.

h) Air voids in mix, as calculated on the basis of the Maximum Specific Gravity of Bituminous Paving Mixtures (AASHTO T 209-74).

i) The bitumen absorbed by the aggregates, as calculated on the basis of the Maximum Specific Gravity of Bituminous Paving Mixtures (AASHTO T 209-74).

From time to time, as directed by the Engineer, the Contractor shall also submit test results for the penetration and softening point (Ring and Ball) of samples of the bitumen extracted from the finished mix.

2.10.8 Measurement and Payment

2.10.8.1 Excavation and Fill

Excavation and fill shall be measured in accordance with Clause 2.2.8.

2.10.8.2 Subbase and Gravelling

Unless otherwise mention in the BOQ gravel for subbase shall be measured by cubic meter placed and compacted upon the road calculated as the product of the compacted sectional area specified to be laid and the length instructed.

The rates for gravel for subbase shall include for the cost of opening up the borrow area, excavation and selection of material, removing and spoiling of oversize material, screening or breaking, stockpiling, transportation, spreading, compacting, rolling, making good defective areas and maintenance of the surface and all incidentals in accordance with the requirements of these specifications.

2.10.8.3 Water Bound Macadam for Base

Unless otherwise mention in the BOQ water bound macadam for base shall be measured by the cubic meter placed and compacted upon the road calculated as the product of the compacted sectional area specified to be laid and the length instructed.

The rates for water bound macadam for base shall include for the cost of opening up the borrow area, excavation and selection of material, removing and spoiling of oversize material, screening or breaking, stockpiling, transportation, spreading, compacting, rolling, application of screening, watering, making good defective areas and maintenance of the surface and all incidental in accordance with the requirements of these specifications.

2.10.8.4 Prime Coat

2.10.8.4.1 Basic Cost

The basic prime coat shall be measured in square meters in the accepted work as instructed by the Engineer on Site. The application rate for measurement shall be 1.0 kg/m2 (net bitumen). Cutter shall not be measured and shall be deemed included along with other associated costs shall be included in the item rate of prime coat. The measured quantity shall be the area instructed and accepted by the Engineer. The binder application rate shall be corrected to 15.6°C.

The contract unit rates for prime coat shall be payment in full for carrying out the required operations including full compensation for:

a) Providing all materials for all preparation, delivering and application and

b) Providing all labor, tools, equipment, and incidentals necessary to complete the work.

2.10.8.4.2 Variation in application rate

Measurement of variation of binder application shall be by litre calculated as the difference between the above specified binder application rate and the binder application rate (net bitumen) instructed by the Engineer, corrected to 15.6°C. Adjustment of compensation to the Contractor shall be as follows:

As a payment to the Contractor where the binder application rate is increased above the specified rate, but only where such increase has been instructed in writing by the Engineer.

As a refund to the Employer where the application rate is reduced below the specified rate of application. The binder application rate shall be reduced if the Engineer so instructed in writing.

Office Chief

2.10.8.5 Asphaltic Concrete

Asphaltic concrete shall be measured by cubic meter placed and compacted upon the road calculated as the product of the compacted sectional area specified to be laid and the length instructed.

The rates for asphaltic concrete shall include for the cost of opening up the borrow area, excavation and selection of material, removing and spoiling of oversize material, screening or breaking, stockpiling, provision of binder, mixing, transportation, spreading, compacting, rolling, making good defective areas and maintenance of the surface and all incidentals in accordance with the requirements of these specifications.

2.10.8.6 Surface Dressing

The distributor shall be dipped and the binder temperature recorded before and after each spray run and spray length and width recorded on approved Record Sheets. The hot application rate shall be calculated and recorded and checked against the specified rate. The calculated actual rate shall not vary by more than ± 5% from the specified rate. The actual quantity of binder sprayed corrected to 15.6°C shall be calculated.

At least eight clean pre-weighed metal spray trays shall be available for sampling the spray rate for each spray run, to be used in accordance with TRRL-ORN 3 - Section 6.3 Method B - if so instructed by the Engineer.

Binding material bitumen and cutter shall be measured separately in litre. For computation of the quantity the following methods shall be adopted.

(a) Design/instructed rate of application times specified area sprayed computed in litres corrected to 15.6°C.

(b) Actual rate of application measured through tray tests times specified area sprayed, computed in litres corrected to 15.6°C.

(c) Actual consumption in specified area sprayed measured in litres corrected to 15.6°C by dip stick feading of the distribution.

The lowest value of the above three methods shall be adopted for payment. However, if the rate of actual spray of binder is much less or more than the designed/ instructed rate of spray so as to impair quality of surface dressing, the Engineer shall reject the work or shall ask for appropriate rectification which the contractor shall execute at his own cost.

Bitumen and cutter shall be computed on the basis of percentage actually used in the work.

Chipping of each nominal size shall be measured in cubic metre. For computation of quantity the following methods shall be adopted.

(a) Design/instructed rate of application of chippings times specified area applied.

(b) Actual rate of application of chippings times' specified area of application.

The lower of these two values shall be adopted for payment. However rate of application shall not vary with designed/instructed rate of application to impair quality of surface dressing. In such event the Engineer shall reject the work or ask the Contractor to rectify at his own

Government of Nepal
Ministry of Infrastructure Development
Department of Water Supply and Sewerage Management Office
Water Supply and Sewerage Management Office
Butwal, Rupandehi
Office Chief

3 PIPELINES AND RELATED WORKS

3.1 Pipe Trenches

3.1.1 Scope

This specification covers earthworks in trenches for all types and sizes of pipes. It covers excavation, the preparation of a trench bottom, bedding for pipe laying, backfilling and the reinstatement of surfaces.

3.1.2 Interpretations

3.1.2.1 Supporting Specifications

The following specifications shall, inter alia, form part of and shall be read in conjunction with this specification:

a) 1 General
b) 2.1 Site Clearance
c) 2.2 Earthworks
d) 2.10 Roads and Parking Areas

3.1.2.2 Application

This specification contains clauses that are applicable to earthworks for pipe trenches associated with Water mains, water distribution mains, and sewerage and drainage systems.

3.1.2.3 Definitions

For the purpose of this specification the following definitions shall apply:

Backfill - The approved filling material placed in a pipe trench after the pipe has been laid, bedded and surrounded by the blanket that has been compacted at the sides and over the top of the pipe.

Bedding - The material, and the operation of placing it, of the bedding cradle and blanket, up to the underside of the backfill.

Blanket - The bedding zone in which material is placed and compacted on or from the top of the cradle up the sides and over the top of the pipe in such a manner that the barrel of the pipe is supported continuously and firmly on the sides and protected over the top by a dense cushion of material.

Cradle - The bedding zone in which material is placed firmly and without voids under and up the sides of a pipe in such a manner that for all practical purposes the pipe cannot move or deflect.

3.1.3 Materials

The material encountered in excavation will be classified as Normal or Rock in the manner described in the Section Earthworks (Clause 2.2.3.1)

For selected fill material, the requirements given in Clause 3.2 shall apply.

Backfill material shall be material excavated from trenches, provided only that it contains no organic material, that it excludes stones of average dimension exceeding 150 mm, and that its moisture content will allow it to be compacted to 95% of the Modified Proctor Density to avoid significant settlement, and shall have a PI not exceeding 12. Backfill material in road or traffic areas shall in addition have a minimum CBR of 15% at specified density if placed in the upper 200 mm of the subgrade, and a minimum CBR of 7% if the backfill is to be placed lower in the subgrade. Material containing more than 10% of rock or hard fragments that are retained at a sieve of nominal aperture size 50 mm, and material containing large clay lumps that do not break up under the action of the compaction equipment being used, will be regarded as unsuitable for use in backfilling.

If the Contractor allows material which, when excavated was suitable for re-use, to become unsuitable when required for backfilling, he shall make good by running it to spoil and replacing with suitable material.

Where trenches cross or run along surfaced roads and paved areas of which the surfaces are ordered by the Engineer to be reinstated, the Contractor shall obtain prior approval for subbase and base materials that may be required to supplement such materials lost during excavation. Materials for bituminous or asphalt construction shall comply with the applicable standards of the Roads Department of the Ministry of Transport.

The Contractor is not required to use selective methods of excavation but may, if he so wishes, screen, wash or otherwise treat excavated material in order to produce material suitable for the bedding. He shall take positive steps to avoid burying or contaminating materials which otherwise would be suitable for use as different types of fill, topsoil, or road material, as applicable.

Government of Nepal
Ministry of Infrastructure Development
Department of Water Supply and Sewerage Management
Water Supply and Sewerage Management Office
Butwal, Rupandehi

Office Chief

3.1.4 Construction Equipment

The Contractor shall use trenching equipment that will excavate to a width such that the side allowance does not exceed the appropriate values specified in Clause 3.1.5.2 below by more than 50 %.

The Contractor shall use appropriate techniques or provide equipment such as pumps, well points and sheeting or close timbering for keeping the trenches sufficiently free from water to enable him to lay pipes true to line and level and to bed them soundly.

The Contractor may use mechanical compaction equipment but he shall select such equipment and operate it in such a manner that the pipeline is not stressed or damaged. Machine compaction shall not be used directly above the pipe until sufficient backfill has been placed to ensure that machine compaction loads transmitted to the top of the pipe are not greater than would be imposed by normal road traffic over a pipeline with cover of depth 600 mm.

3.1.5 Construction and Workmanship

3.1.5.1 Precautions

With regard to dealing with water, the requirements of Clause 2.2.5.2.2 -b shall apply in addition to the stipulations below.

In the case of a trench on sloping ground, the Contractor shall take approved measures (such as the construction of cross-embankments) to minimize erosion in the trench and adjacent ground.

With regard to accommodation of traffic and access to properties, the Contractor shall, in addition to the requirements of Clauses 1.5.2, construct or put in order such bypass(es) as may be required to deviate traffic from portions of the road that are to be affected by the construction; or where half-width construction is ordered or approved, so arrange his work that the traffic will at all times have free one-lane access to at least half the width of the roadway; or ensure, wherever possible, that the whole road is open at night and left in a trafficable condition, complete with traffic signs and protection facilities as specified.

He shall also ensure, wherever possible, that the usable width of the road is at least 3.5 m and he shall provide and allow reasonable access to persons occupying properties that fall within or adjoin the area over which he is working. If, for any reason, such access has to be closed during the construction period, the persons affected shall be given reasonable notice for each such period of closing.

With regard to existing services that intersect or adjoin trenches, the requirements of Clause 2.2.5.1.2 shall apply.

Special precautions may be necessary when buildings are close to the edge of the trench. Throughout the duration of such activities the Contractor will be fully responsible for the safety of all adjacent property. Wherever the minimum clearances cannot be complied with, e.g. in certain urban areas, the Contractor shall provide adequate temporary protective support by struts, bracing, etc. for adjacent structures and such support must be capable of safeguarding the buildings from structural damages resulting from the execution of the Works. Prior to installation the Contractor in consultation with the effected person or owner of the effected properties shall submit to the Engineer his proposed system of support for approval. Irrespective of the Engineer's approval sufficiency and suitability of the support will remain the sole responsibility of the Contractor. The support shall remain in place until such time as the Contractor is sufficiently convinced that there is no more imminent risk of damage of any kind to the adjacent buildings resulting from the activities. Upon removal of the support any damages caused by the attachment of the support itself shall be repaired to the satisfaction of the Engineer.

3.1.5.2 Maximum base width

The base width of a trench shall be not more than the value shown in drawing.

Where two or more pipes are to be placed in one trench, the base width of the trench shall be no less than the sum of the external diameters of the pipe barrels plus the side allowance for each outer pipe plus, between each pair of adjacent pipes, the average of the side allowance for each pipe.

3.1.5.3 Maximum Length of open Trench per Gang

Except by special permission of the Engineer, only that length of trench excavation shall be permitted in advance of the pipe jointing, such that laying and jointing of pipes can reasonably be expected to be completed and the trench refilled not later than 7 days after excavation of trench. The contractor will not permitted to keep trenches open for unduly long period, creating public hazards. The Engineer's decision in this respect shall be final.

3.1.5.4 Site clearance

The Contractor shall clear the working strip, in accordance with Clause 2.1. The working strip shall be an area of sufficient width along the route of the pipeline to ensure that his construction operations are not hampered and damage to buildings and the environment is minimized.

Government of Nepal
Ministry of Infrastructure Development
Department of Water Supply and Sewerage Management
Water Supply and Sewerage Management Office
Office Chief

3.1.5.5 Excavation

The length of pipe trench excavated by a gang shall be as per the Clause 3.1.5.3. The width of the trench shall provide at least the appropriate side allowance (within trench supports, if any) as specified in Clause 3.1.5.2 above, and such that half of the base width is on either side of the designated centre-line of the pipe.

The sides of each trench from the bottom up shall be vertical as possible.

When cutting through bituminous surfaces, the edges of the existing bitumen base and/or wearing courses shall be cut back vertically to straight lines.

All trenches shall be braced and strutted to the satisfaction of the Engineer, if they are;

a) so close to a building or structure, that a line between the corner of the trench bottom nearest to the building and the underside of the foundation of the building or structure would be steeper than 45^0 ·
b) if the soil conditions are not providing sufficient stability to the side walls.

The Contractor will be responsible for any damage resulting from trench instability and insufficient bracing and strutting.

During the course of the Works the Contractor shall clean road surfaces and other paved areas used by his vehicles and employees to minimize disturbance to residents and road users, cleaning shall be to the satisfaction of the Engineer.

3.1.5.6 Widening Trench at Joints Etc.

Any widening or deepening of the trench, whether in ordinary soil or rock, necessary to accommodate curves, joints or bends as shown on the drawings or ordered by the Engineer shall be carried out by the Contractor, after taking all the necessary safety measures.

3.1.5.7 Over-Excavation of Trench Bottoms

All excavation carried below the grades shown on drawings or bottom (limit depth of excavation) of the bedding shall be refilled with sand / concrete at the Contractor's expense

3.1.5.8 Trench bottom

Material that the Engineer considers to be unsuitable at the bottom of the trench shall be excavated to the depths directed and disposed of in the manner described. The resulting space shall be refilled, as ordered, with approved material and compacted as directed.

Where the bottom of the trench has been loosened during excavation, it shall be compacted at OMC to 90 % of modified AASHTO maximum density prior to bedding and pipelaying.

Bottoms of the excavated trenches shall be trimmed flat and leveled to provide an even base for the pipeline or pipe bedding; rocks, debris or other extraneous matter that may damage the pipes shall be removed.

Where pipes are to be laid on formation made in undisturbed ground (i.e. without bedding), the Contractor shall ensure that excavation in the first instance is stopped 75 mm above formation level and the trimming the formation shall be done by hand immediately prior to starting the laying of the pipes.

Where granular or concrete beddings are required, bottoms of trenches shall be excavated to a depth below the proposed level of the pipe over the full width of the trench as shown in the Drawings.

The depth of the trench shall be such that the depth of the cradle can be placed under the pipeline, and the trimming and grading of the bottom of the trench shall be such that the barrel of each length of pipe can be uniformly supported over its full length, free at the joints, and at the correct grades and levels.

The bottom of pipe trenches shall be sufficiently straight to enable the pipe to be laid without reduction of the trench width given in Clause 3.1.5.2 above and in conformity with the applicable tolerances specified.

3.1.5.9 Backfilling

Backfilling of pipe trenches shall commence as soon as possible after the pipe has been laid and firmly bedded in the specified cradle and the blanket has been placed over the top of the pipe to the height of blanket cover specified.

Backfilling shall be carried out as described below and over the full extent of the actual trench excavation and to original ground level, except where otherwise directed.

Unless the Contractor is authorized by the Engineer to use other material, the material for backfilling above the bedding (cradle and blanket) shall be obtained from trench excavations.

Unless prior approval has been obtained, no filling shall be placed in water.

Hard and rock material shall be incorporated in the backfill above the bedding only to the extent approved. Depending on the quality of the material, the Engineer may direct that it shall be suitably mixed with other backfill material.

Excavated material from the trench, which is unsuitable or has become surplus because of bulking, displacement by the pipe and importation, shall be disposed of as approved by the Engineer.

Any deficiency of backfill material from trench excavations because of removal of organic or other unsuitable material shall be made up from suitable surplus material from other excavations on the Site. If, insufficient or no suitable material is available for this purpose from such excavations, the Contractor shall import sufficient suitable material. The Contractor shall so arrange his work that the importation of backfill material is kept to a minimum.

The Contractor shall complete backfilling of trenches expeditiously and in reasonable lengths.

3.1.5.10 Compaction

In normal areas backfill shall be in accordance with Clause 2.2.5.2.3.

In areas subject to traffic loads, trenches shall be backfilled with selected fill material in layers of thickness (after compaction) not exceeding 150 mm and the material shall be compacted to at least 95 % of modified AASHTO maximum density up to the top of the subgrade level.

3.1.5.11 Reinstatement of surfaces

In all cases, the Contractor shall, if ordered, reinstate surfaces over the full extent of the top of the actual excavation.

On private properties or other unsurfaced areas, the top 100 mm layer of each trench that will not be subject to road traffic loads shall be of such topsoil as is available in addition to soft material from excavations. The finished surface of backfilling, after appropriate compaction and that is left raised of the surrounding ground to allow for initial settlement, shall not be more than 150 mm above the surrounding ground.

In case of gravel roads or similar surfaced areas, the Contractor shall, immediately after completion of the backfilling to the top of the subgrade level, reinstate the road surface by filling the reminder of the trench with a well-graded and approved hard-wearing gravel surface of thickness at least 200 mm, and of quality equal to that of the existing road surface compacted to at least 95% modified AASHTO density. The gravel layer shall be finished with a slight camber in order to allow for initial settlement but shall not be shaped such as to cause excessive jolting of any vehicle proceeding with normal speed.

If the surface of a road with a stabilized base has been disturbed, the base shall be replaced with crusher run base compacted with sufficient moisture to give a density of at least 98 % modified AASHTO maximum density.

Except if otherwise ordered by the Engineer, the surface of a bitumen road shall be reinstated with asphalt of at least the thickness used in the original state. The base material shall be graded to a level sufficiently below the final road surface to allow the bitumen surfacing to be accommodated, and the edges of the existing bitumen wearing course shall be cut back vertically to a straight line. Before the bituminous construction is commenced, all loose materials and dust shall be removed and after approval, the surface shall be prime coated at the rate of 1.0 l/m^2 of MC30 cutback bitumen. The bituminous surface will have a tolerance of ±6 mm after compaction.

The Contractor shall maintain the reinstated surfaces and shall make good, at his own expense, any damage due to any subsidence, pothole or any other unevenness during the period of the contract or during the defects liability period.

Where, during the execution of the activities, if any other road or paved surface (other than the right-of way or road in which the pipeline is laid) has been damaged in any way whatsoever by the Contractor's equipment, he shall, at his own expense and as soon as is practicable, repair and restore such surface to a condition at least equivalent to that previously existing, and to the satisfaction of the Engineer and the concerned authority.

3.1.6 Tolerances

3.1.6.1 Alignment and grade

The deviation from the specified level of the invert and the specified dimensions of a trench and (for a height equal to at least the diameter of the pipe) of the lower part of the sides of the trench shall be such that the pipe may be laid and bedded in the trench within the tolerances specified for the pipeline.

3.1.6.2 Moisture content and density

The requirements for moisture content and density given in Clause 2.2.6.2 shall apply.

3.1.7 Testing and Acceptance

The Contractor shall provide: the optimum moisture content, the maximum dry density, the CBR, Marshall and the specified properties of reinstatement and backfill materials before use at a rate of one test per 200 m^3 of material. In-situ density test of non-bituminous materials, and Marshall compaction/in-situ coring of bituminous materials will be carried out on each layer for every 200 linear meter of trench or part thereof by the Contractor in the presence of the Engineer, or by an independent laboratory approved by the Engineer. The cost of all testing will be included in the Contractor's

rates. In the event of failure results, the Engineer will order removal of such defective work or carry out remedial works at the Contractor's expense.

Government of Nepal
Ministry of Urban Development
Department of Water Supply and Sewerage Management Office
Butwal, Rupandehi

Office Chief

3.1.8 Measurement and Payment

The items scheduled for clearance and demolition will be classified according to the nature of the materials involved and the methods of their disposal. The item for clearance shall include the removal of topsoil and storing for reuse.

Clearance of the working strip shall be measured as the length of pipeline with no deduction for chambers.

Dismantling and Demolition of structures, buildings etc, shall be measured as a sum for demolition of the identified structure as per BOQ.

The Item rates for reinstatement of the Site shall include preparing the working strip to receive topsoil, placing topsoil, disposal of surplus materials, planting and seeding, watering, providing fertilizer and reinstatement of land drains.

Unless and otherwise mentioned in BOQ, reinstatement of work in roads shall be measured in square meter.

The rates for trench excavation and preparation of bedding shall cover the cost of excavating and re-use of the excavated material. Additional payments will be made for bedding of selected type.

Trench excavation and bedding will be measured as the Volume of excavation.

Excavation for chambers, abutments, columns, thrust blocks, and anchors shall be measured as the volume of excavation, on accordance with Clause 2.2.8, outside the nominal trench dimension.

Excavation in rock shall be measured extra over normal excavation and measured as a volume.

Government of Nepal
Ministry of Infrastructure Development
Department of Water Supply and Sewerage Management Office
Butwal, Rupandehi

Office Chief

3.2 Pipe Bedding and Fill

3.2.1 Scope

This specification covers the bedding, consisting of the bedding cradle and the selected fill blanket, for buried pipes for carrying fluids under pressure or gravity.

3.2.2 Interpretations

3.2.2.1 Supporting Specifications

The following specifications shall, inter alia, form part of and shall be read in conjunction with this specification:

a) 1 General
b) 2.1 Site Clearance
c) 2.2 Earthworks, as applicable
d) 3.1 Pipe Trenches

3.2.2.2 Application

This specification contains clauses that are generally applicable to the bedding of pipes.

3.2.2.3 Definitions

For the purpose of this specification the following definitions shall apply:

Bedding - The material in the bedding cradle and fill blanket up to the underside of the main fill, and the operation of placing and compacting bedding in the manner specified.

Bedding cradle - The zone in which bedding is placed firmly and without voids under and up the sides of a pipe in such a manner that for all practical purposes the pipe cannot move or deflect.

Expansion joint - A joint in concrete bedding in which two concrete surfaces are separated by resilient filler of thickness at least 15 mm.

Flexible pipe –A pipe whose properties are such that the first limit state reached is either excessive deformation, or buckling collapse. Plastic pipes, UPVC etc, are examples of flexible pipes.

Joint hole - A depression formed in the bedding cradle to accommodate a joint in a pipeline.

Main fill - The approved filling material placed in a pipe trench after the pipe has been laid, bedded, and surrounded by selected fill blanket up to 300 mm cover above the top of the pipe.

Rigid pipe – A pipe whose properties are such that the first limit state reached is fracture of the pipe walls due to bending stress. Concrete pipes are an example of rigid pipes.

Selected fill blanket - Material placed and compacted to form a blanket on or from the top of the bedding cradle up the sides and over the top of the pipe in such a manner that the barrel of the pipe is supported continuously and firmly on the sides and is protected over the top by a dense cushion of material.

Selected fill material - Material that complies with the requirements of Clause 3.2.3.2 below.

Selected granular material - Material that complies with the requirements of Clause 3.2.3.1 below.

Semi-rigid pipe - A pipe that can deform enough to redistribute some of the overburden pressure to the sidefills, but which is stiff enough to rule out the possibility of buckling. The first limit state reached may be either excessive deformation, or excessive wall bending stresses. Ductile iron pipes are considered as semi-rigid pipes.

3.2.3 Materials

3.2.3.1 Imported selected granular material

Selected granular material shall be material of a granular, non-cohesive nature, free draining, a pH>6 and the following grading.

Sieve Size (mm)	% Passing Sieve
40	100
20	100
5	60-100
2.5	20-80
0.6	0-25
0.315	0-20
0.075	0-5

Government of Nepal
Ministry of Infrastructure Development
Department of Water Supply and Sewerage Management
Water Supply and Sewerage Management Office
Butwal, Rupandehi

Office Chief

3.2.3.2 Imported selected fill material

Selected fill material shall be material that has a pH>6 and the following grading.

Sieve Size (mm)	% Passing Sieve
40	100
20	80-100
5	60-100
2.5	20-100
0.6	5-100
0.315	0-70
0.075	0-10

3.2.3.3 Bedding

Bedding for all pipelines shall be as shown on the Drawings. The Blanket/Cradle (Pipe zone) shall be of selected granular or sand material while material for the main fill shall be selected fill material.

3.2.3.4 Selection

The Contractor may screen, wash, or otherwise treat excavated material from pipe trenches or other excavations in order to produce material suitable for covering the pipeline. The Contractor shall take every reasonable precaution to avoid burying or contaminating material that is suitable and is required for bedding or covering the pipeline.

When material suitable for use as selected fill material or selected granular material is not readily available from trench or other excavation within a reasonable distance, the Contractor shall, subject to the Engineer's approval for each material, obtain suitable material to replace the shortfall by opening up borrow pits at approved areas located at intervals along the route of the pipeline or by importing from commercial or other sources.

3.2.4 Construction Equipment

Adequate equipment shall be provided by the Contractor for the placing and compacting of bedding as specified in Clause 3.2.5 below.

The Contractor shall also provide the necessary test equipment for performing on Site tests referred to in Clause 3.2.7 below.

3.2.5 Construction and Workmanship

3.2.5.1 General

No bedding shall be laid until the Engineer has approved the trench, measured the depth if necessary, and authorized pipelaying to proceed.

The anchoring of pressure pipes shall be as shown in the Drawings.

The bedding requirements for ductile iron and HDPE pipes shall be as shown in the drawings.

A cavity of adequate size shall be excavated in the sides and bottom of the trench or left in the pipe bed at each joint and at each sling position.

The preparation of the trench bottom or surface of the bed shall be completed for at least one full pipe length in advance of the pipe laying, except where in exceptional circumstances another arrangement is approved.

No bedding material shall be placed in trenches containing water.

Where bedding other than concrete is to be used, stones, bricks or similar materials shall not be used below or against the pipes to locate them in position in the trench or to level the pipes.

Except in the case of concrete surround, the joint holes shall be refilled with fine granular material and lightly compacted to prevent the migration of adjacent pipe bedding material into the holes and to obviate the forming of hard spots under joints.

In the placing of bedding, all voids under the overhang of the pipes shall be filled and the compaction shall be carried out uniformly on each site of the pipes so as not to cause any lateral or vertical displacement of the pipe.

Bedding shall be carried out as pipelaying proceeds, and shall be completed before the acceptance test is carried out.

The degree of compaction attained for bedding (other than concrete) shall be 90% modified AASHTO maximum density.

Government of Nepal
Ministry of Urban Development
Department of Water Supply and Sewerage Management
Sewerage Management Office
Banke, Nepalgunj

Office Chief

3.2.5.2 Placing and compacting of bedding for rigid pipes

In addition to complying with the requirements of Clause 3.2.5.1 above, the Contractor shall construct the bedding for flexible and semi-rigid pipes in accordance with the following requirements:

Pipes shall be supported on a cradle as indicated on the engineer's drawings. Initially continuous bed of selected granular or sandy material of compacted depth indicated shall be placed in 100 mm layers and covering the full width of the trench. The granular material shall be compacted to the density specified in Clause 3.2.5.1. After laying of the pipeline, additional selected granular material shall than be placed carefully and evenly between the sides of the trench and the pipeline, in layers of uncompacted thickness approximately 100 mm and in accordance with the construction details. Each layer shall be compacted individually to the density specified in Clause 3.2.5.1.

After completion of the bedding blanket and cradle (pipe zone), selected fill shall be placed carefully in layers of 100 mm uncompacted thickness over the full width of the trench and shall be compacted to the density specified in Clause 3.2.5.1 up to a height above the crown of the pipeline, as shown in the drawings.

When placing and compacting the bedding particular care shall be exercised to prevent damage, deflection, or displacement of the pipeline and the polyethylene sleeving, if any.

3.2.5.3 Concrete surround

In special cases, and where ordered by the Engineer, pipes shall be surrounded in concrete of the specified grade, generally of at least 20 MPa. The lower part of the encasement shall be constructed in the manner specified for Class A bedding. Once the pipeline has been tested and approved, the pipes shall be covered with concrete to the specified depth and expansion joints shall be cut or constructed in the upper part to coincide with those in the lower part. No earthfilling over the concrete shall be commenced until at least 5 d after the concrete has been placed or until the concrete has attained strength of at least 15 MPa.

3.2.6 Tolerances

The permissible deviations shall be as follows:

(i)	Moisture Content in field during compaction	OMC -2, +1 %
(ii)	Density when bedding rigid pipes	-0, +5 %
(iii)	Density when bedding flexible and semi-rigid pipes	-0, +3 %

3.2.7 Testing and Acceptance

The Engineer may order density tests to be carried out to determine the density and grading of the bedding. Tests will be carried out for every 200 linear meter of trench or part thereof by the Contractor in the presence of the Engineer, or by an independent laboratory approved by the Engineer. The cost of all testing will be included in the Contractor's rates. If the density is found to be below the specified value, the Engineer may order removal and re-compaction at the Contractor's expense, and the cost of retesting shall be borne by the Contractor.

The tests may be carried out by the sand replacement method or, where the grading of the bedding is such that the particle size is not less than 0.075 and not more than 2 mm, by use of a dynamic cone penetrometer.

3.2.8 Measurement and Payment

These shall be made according to Clause 3.1.8.

Government of Nepal Ministry of Urban Development Department of Water Supply and Sewerage Management Office Butwal, Rupandehi

Office Chief

3.3 Supply, Delivery and Installation of Water pipelines

3.3.1 Overall Scope

Supplying Ductile Iron pipes from 80 mm to 400 mm diameter, conforming to ISO 2531:2009 with latest amendments and conveying to worksite, rolling and lowering into trenches, laying true to line, level and perfect linking at joints, testing and commissioning, including loading and unloading at both destinations and cuts of pipes wherever necessary including jointing of pipes and specials, (excluding cost of specials) with rubber gaskets including cleaning the socket and spigot ends with soap solution and applying soft soap to the spigot and socket ends before insertion of rubber gaskets, jacking and fixing in perfect conditions including cost of soap solution, soft soap, waste etc. and giving necessary hydraulic test to the required pressure as per specification mentioned in clause 3.3.3.6 with all lead and lift including cost of jointing materials. (Contractor will make his own arrangements for procuring water for testing).

This specification covers the supply, transportation to Site of all pipe, fittings, appurtenances and other specials for installation and testing of water supply pipe lines, valves, fittings and other specials. The first part of this section describes requirement for supply and delivery of the pipe, fittings, appurtenances and other specials. The second part is specification for the installation, testing and disinfection of pipelines, fittings, appurtenances and other specials

3.3.2 Supply and Delivery of DI Pipe, Fittings, Appurtenances and Other Specials

3.3.2.1 General and Storage

3.3.2.1.1 Scope

The Contract shall include but not be limited to: provision of guards and storekeeper until completion of the works; supply of items; transport to Site; insurance; unloading and storing at Site in an acceptable manner (in air-conditioned stores if necessary); repair of any damage during transportation; provision of operations and maintenance instructions; provision of spares; making records of storage, stock control program; and provision of special tools, provision of a warranty against manufacturer's defects for the items supplied for a defect liability period (except where otherwise indicated for specific items). During the delivery of items train the Employer's staff in the store keeping system, methods of handling pipes and fittings.

3.3.2.1.2 Definitions

For the purpose of this specification the following definitions shall apply:

Materials - All materials and articles of every kind, raw, processed or manufactured, which are used in the manufacture of goods to b supplied under the Contract.

Fittings - A special or a valve, or joint adaptors, or couplings or a process of jointing (except welding) straight pipes to one another and to specials and valves.

Pressure Pipelines – A pipeline in which the normal internal working pressure exceeds 3 metres of water (0.3 Bar) and such other pipework as may be so designated

Special - Any pipe other than straight pipe, such as bends, tees, reducers, etc.

Straight pipe - A straight pipe of uniform bore and of standard or non-standard length.

Valves - A flow control equipment which are not joints or fittings.

Internal - Those parts of pipes or fittings which are to be in contact with the liquid being conveyed.

External - Those parts of the pipes or fitting which are not to be in contact with the liquid being conveyed and which are likely to be in contact with pipe bedding or native soil.

Flexible joints - joints made with factory made jointing materials, loose collars, rubber joint rings and the like which permit angular deflections between adjacent pipes.

Meters - shall mean water revenue meters.

3.3.2.1.3 Abbreviations

For the purpose of this specification the following abbreviations shall apply:

a)	CI	Cast Iron
b)	DI or DCI	Ductile iron
c)	DN or ND	Nominal Diameter
d)	EPDM rubber	Ethylene propylene diene Monomer rubber
e)	GI	Galvanized Iron
f)	GS	Galvanized Steel
g)	PE	Polyethylene pipe

h)	IRHD	International rubber hardness degree
i)	PN	Nominal Pressure
j)	PVC	Polyvinyl Chloride
k)	PTFE	Polytetrafluor ethylene
l)	NBR	Nitrile butadiene rubber, a family of unsaturated copolymer rubbers
j)	NR	Natural Rubbers
k)	SS	Stainless Steel
l)	ST	Steel
m)	UPVC	Unplasticized Polyvinyl Chloride
n)	HTS	High Tensile Steel (Seamless)

3.3.2.1.4 Site

The Site for the purposes of the supply of pipes, fittings, appurtenances, and specials in this contract is store in stockyard or covered store facilities established and maintained by the Contractor.

The Contractor shall not use the Site for any purpose not required by the Contract. The Contractor shall prepare the storage area and store to receive Goods.

3.3.2.1.5 Climatic condition and Tropicalization

In choosing materials and their finishes, due regard shall be given to the humid tropical conditions to which they will be subjected when installed in the transmission and distribution system. The Contractor shall submit details of his practices that have proven satisfactory and he recommends for application on the parts of the supplied items which may be affected by the tropical conditions.

All items of materials shall be in every respect suitable for storage, installation, use and operation in the conditions of temperature and humidity appertaining in project area.

The annual monthly minimum and maximum average temperature is 13.8°C and 28.9 C, respectively, while extreme temperate ranges from -3.3°C (in month of January) to 36°C in May, Annual average raninfall is 1465mm per year and the 80 to 90% rainfall occurs in 4 months (June to September), while the average relative humidity varies generally from 37% to 84%.

3.3.2.1.6 Suitability for Potable Water

Pipes and pipeline components, including their protective coatings and joint materials, that will or may come into contact with potable water shall not constitute a toxic hazard; shall not support microbial growth; shall not cause taste or odour, cloudiness or discolouration of the water.

3.3.2.1.7 Drawings

The drawings issued to the Contractor show details of the pipes, fitting, and valves assumed during the design of the civil works, the Contractor should take note of these drawings and notify the Engineer if any of the dimensions of the items he supplies are different to those indicated on the drawings.

3.3.2.1.8 Languages

All drawings, instructions, signs, notices, name-plates, etc for use in the operation and maintenance of the supplied Goods shall be in English.

3.3.2.1.9 Non-metallic Materials

All non-metallic materials supplied shall be listed in the current "Water Fittings and Materials Directory" published by the Water Research Centre, UK, or approved equivalent publication, as a recognized certifying authority having passed full tests of effect on water quality under the requirements for the testing of non-metallic materials for use in contact with potable water.

3.3.2.1.10 Transport and Handling of Materials

Any vehicle on which pipes, valves, or fittings are transported shall have a body of such length that the items do not overhang. Coated pipes, valves and fittings, not in crates, shall be transported on trucks or trailers fitted with approved padded timber cradles shaped to fit the curvature of the pipes, valves or fittings and of adequate dimensions so as to prevent any damage to the coating. Successive tiers of coated pipes valves or fittings shall be separated by similar suitable shaped timber cradles. Pillows shall be provided between securing chains or lashings when load are being transported.

Particular care shall be taken during unloading, loading, handling and transportation to avoid distortion, flattening, denting, scaring or any other damage to the pipes, valves or fittings and any damage to the external or internal coating or

lining of the items etc. Under no circumstances shall pipes, valves or fittings be dropped, be allowed to strike on another, be rolled freely or dragged along the ground.

Loading, unloading and handling shall be carried out using special hooks, well padded, with a curved plate to fit the curvature of the pipes, valves or fittings or webbing slings not less than 300 mm wide or other means approved by the Engineer. Steadying ropes shall be employed. The positions of lifting slings shall ensure that stresses and tendency towards deformation in the pipes, valves and fittings are kept at a minimum. Handling equipment shall be maintained in good repair and any equipment, which in the opinion of the Engineer may cause damage to the pipes, valves or fittings shall be discarded.

Additional precautions shall be taken to avoid deformation of the flexible or large items. To maintain their dimensions struts and supports shall be fitted to the items and shall be retained in position until laying and jointing have been completed. Struts shall be adjustable in length having the ends suitably shaped. Where pipes or fittings are cement mortar lined struts shall be fitted after curing. At least two struts shall be used in each full length of pipe.

Details of the proposed strutting and support system shall be submitted to the Engineer for approval and if required by the Engineer, the method of strutting shall be demonstrated and tested on Site. End covers and protection shall not be removed until incorporation of the pipes and fittings into the Works.

Care shall be taken during loading, transporting, and unloading to prevent damage to the pipes, valves and fittings. After unloading all items will be examined, any defects or damage to the pipe, valve, fitting, lining or coating, shall be noted and reported to the Engineer. Any damage shall be repaired in a manner recommended by the manufacturer with the approval of the Engineer. Any pipe or fitting not considered by the Engineer to be of an acceptable quality after repair will not be accepted.

Any items which, in the opinion of the Engineer are delivered damaged or are damaged by the Contractor in the process of stockpiling at Site shall be promptly removed from the Site. The Contractor shall receive no compensation for the damaged material or its removal until it is either repaired to the satisfaction of the Engineer or replaced.

3.3.2.1.11 Storage of Materials

Pipes, valves and fittings shall be unloaded and stocked by the Contractor at the store/stockyard.

Pipes shall be stored in piles only up to such height as recommended by the manufacturer. The first layer will be placed on beams, large enough to distribute the pipe loads on the ground and to give sufficient clearance from the ground; the pipes will be secured by wedges. Each layer will be separated from the next by an adequate number of beams (at least two).

All meters, valves and fittings shall be securely packed in crates and boxes to prevent damage during delivery and storage as recommended by the manufacturer and shall be adequately supported clear of the ground on timbers all to the Engineer's approval. The cost of packing shall be deemed to be included in the Contract Rates and crates will not be returned.

Crated small items shall be delivered and stored in their original containers. Each crate, box and other packing shall be clearly labeled with weatherproof marking identifying the quantity and exact nature of the contents thereof, such that materials may be readily identified without opening of the crates.

Until required for incorporation in a joint, each rubber ring or gasket shall be stored in the dark, free from the deleterious effects of heat or cold, and kept flat so as to prevent any part of the rubber being in tension.

Where items to be stored have a limited shelf life or require special storage arrangements, the method of storage shall be to the approval of the Engineer and in accordance with the manufacturer's instructions.

Storage areas shall be set out to facilitate unloading, loading and checking of materials. Different consignments shall be stacked or stored separately with identification marks clearly visible. All areas and sub-areas should be clearly sign posted and marked out.

3.3.2.1.12 Standard of Storage

The standard of storage to be provided by the Contractor shall be as follows:

All items; pipes, fittings etc. shall be stored by the Contractor in a secure stockyard at a site approved by the Engineer and cleared, prepared for storage and fenced by the Contractor at his own expense. Such items shall be protected as appropriate to prevent its deterioration while in store. While the items are in store the Contractor shall make all necessary precautions to maintain the items in a serviceable condition and these precautions shall be to the approval of the Engineer.

All other items which require a stable environment, gaskets, joint materials, lubricants, paints, oils etc. shall be stored by the Contractor in suitable wind and watertight stores to be provided by the Contractor in the stockyard. The stores shall be dust free and shall be adequately ventilated and temperature controlled, to prevent condensation and deterioration of

the stored items. The temperature control shall be provided by a thermostatically controlled air conditioning system. The stores shall also be adequately lit. The storage facility shall be to the approval of the Engineer and be provided at the Contractor's expense.

3.3.2.1.13 Store Records

The Contractor shall prepare records which will include but not be limited to, lists and drawings giving details of each item delivered to site and its storage location. The lists shall be in the form of a computer program that can be used for stock control during the execution of the civil works.

3.3.2.2 Materials and Packing

3.3.2.2.1 General

Before manufacturing items of any description intended for supply, the Contactor shall submit for the approval of the Engineer the names and locations of the factories proposed. No manufacture shall start before the factory and the proposed items to be manufactured in the factory are approved.

In order to ensure watertightness between DI pipes, fittings and valves, all ductile iron products are preferably to be manufactured and supplied from the same manufacturer. And the manufacturer should demonstrate its capacity to produce Di pipes and Fittings from same material.

All item supplied under this contract must ne new.

Materials used in the supplied items which are, or can be in contact with the untreated or treated water shall not contain any matter which could impart taste, odour or toxicity or otherwise be harmful to health or adversely affect the water conveyed. Listing by the UK Water Fittings Bye-laws Scheme as operated by the UK Water Research Centre will generally be regarded as satisfactory evidence of suitability.

3.3.2.2.2 Sample

Unless expressly stated, the Contractor shall provide samples of all manufactured items required for the supply, or alternatively the Contractor shall submit trade literature where the provision of samples, in the first instance and as agreed by the Employer, is impracticable.

All samples shall be provided free of cost and samples rejected by the Engineer shall be removed.

All approved samples shall be stored, at a location approved by the Engineer, by the Contractor for the duration of the Contract, and any items subsequently supplied shall be of a quality at least equal to the approved sample.

3.3.2.2.3 Samples and Tests

The Contractor shall provide to the Engineer three certified copies of the results of any routine analyses or tests carried out by him or his manufacturer on materials used in the manufacture of the Goods when and if asked by the Engineer.

In addition, when and if required by the Engineer, the Contractor shall provide samples of all or any materials used in the manufacture of the Goods and shall carry out any specified test on the said materials as may be required the Engineer at the place of manufacture or at a laboratory approved by the Engineer and shall provide to the Engineer within seven days of each such test three certified copies of the results of the analysis or test.

Samples shall be submitted and tests carried out sufficiently early to enable further samples to be submitted and tested if required by the Engineer. The Contractor or his manufacturer shall prepare the necessary test pieces and supply all labor, appliances, testing apparatus and everything necessary for carrying out all specified tests.

The Contractor shall give the Engineer 14 days notice in writing of the date on which any of the samples will be ready for testing or inspection and unless the Engineer shall attend at the appointed place within the said 14 days, the test may proceed in his absence.

Approval by the Engineer as to the placing of orders for materials or as to samples or tests shall not prejudice any of the Engineer's rights under the Contract.

3.3.2.2.4 Test Certificates

Test certificates in triplicate shall be provided by the Contractor for each consignment of pipe supplied, giving the process of manufacture and the results of the specified tests.

Similar certificates in triplicate shall be provided by the Contractor in respect of materials to be used in the manufacture of the pipes giving the process of manufacture, chemical analysis (where relevant) and the results of the specified tests. The material shall be suitably marked to enable it to be identified from references on the certificates.

Any materials subject to test incorporated in the manufacture of the pipes and fittings before the Engineer has received a satisfactory Test Certificate shall be at the Contractor's risk.

Government of Nepal
Ministry of Infrastructure Development
Department of Water Supply and Sewerage Management Office
Office Chief

3.3.2.2.5 Independent Tests

The Engineer reserves the right to carry out any independent tests he may deem fit on the completed pipes or on any material to be used in the Contract at any stage of manufacture or delivery, in addition to those tests specified to be made by the manufacturer.

Any samples of materials which may be required for such tests shall be provided by the Contractor at no extra cost to the Engineer.

Any materials, workmanship, or completed pipes, which are shown by such independent tests not to be in accordance with the Specification, shall be rejected, notwithstanding any previous certificate which may have been provided.

3.3.2.2.6 Rejected Goods

Any Goods delivered to the Site which have been rejected by the Engineer shall immediately remove from the Site by, the Contractor, free of cost. Replacement of rejected Goods shall be made as soon as possible but in no case exceeding forty five (45) days from the time of rejection.

Any goods which have been rejected shall be marked in a distinctive manner which shall preclude any possibility of their use for the purpose for which they were supplied. Such goods may be submitted for retest following the correction of any defects, where such correction is permitted by the Engineer.

3.3.2.2.7 Approved Manufacturer's Instructions

The Contractor shall supply manufacturer's instructions in English for the operation and maintenance, and where necessary the assembly, of the items supplied. If the translation of the instructions, the quality of accompanying illustrations, or any other element of the instructions are unclear or ambiguous they shall be revised and resubmitted, until approved by the Engineer, all revisions will be at the Contractor's expense.

3.3.2.2.8 Identification and Marking

3.3.2.2.8.1 Permanent Marking of Items

All supplied items shall have permanent distinguishing marks as per this Specifications or a standard approved by the Engineer. All marks shall be visible and legible and not obscured by any protective coating.

3.3.2.2.9 Packing and Protection

Before any item is dispatched from a manufacturer's factory it shall be adequately protected and packed so as to arrive at the Site intact and undamaged. The method of protection and packing must be suitable to withstand the conditions which may be experienced in shipment and delivery to the Site. It should also be suitable to withstand long periods of storage out of doors. As a minimum requirement: unpainted surfaces, including bolts and nuts, machined surfaces, tapped holes and studs, and all other exposed ferrous surfaces, shall be protected with a heavy coat of suitable grease or other easily removed corrosion-protective material, rubber gaskets and glands, and other components which are subject to deterioration by ultraviolet light shall be packed so as to exclude sunlight.

All flanges and mating surfaces shall be protected by means of a wooden template or similar. This template shall not be secured by the bolts, screws etc, which form part of the final installation.

Unless otherwise specified all pipes and fittings shall receive their complete protective coatings before dispatch from the manufacturer's works and shall be additionally protected by approved means for the period of transit, storage and erection, against corrosion and accidental damage.

For the protection of pipe linings and in particular for protecting cement mortar linings from drying out, protective metal or timber discs shall be attached to all flanges of pipes and fittings by means of bolts specifically provided for the purposes and which shall be discarded when the item is incorporated in the Works. The ends of non flanged pipes and fittings shall be wrapped with two layers of opaque 0.3 mm thick plastic sheeting secured with plastic bands, the sheeting and the bands shall not deteriorate during long (4 years) exposure to sunlight. The sleeves and flanges of flexible joints shall be wired together in suitable bundles.

3.3.2.2.9.1 Packing of Bolts, Joint Rings and Gaskets

Bolts of the same length and size (and their accompanying nuts and washers) shall be packed together in boxes not exceeding 100 kg. gross weight. Joint rings and gaskets shall be packed in boxes and separate packages shall be provided for each size and description of ring or gasket.

3.3.2.2.9.2 Flanged Joint Protection

All flanged pipes and sluice valves shall be supplied with complete 'Corrosion' protection materials in accordance with the manufacturer's recommendation. The complete joint protection includes the materials, namely profiling mastic or primer, paste, tape and PVC or polyethylene outer wrapping. The quantity of materials required for each diameter joint

shall be calculated in accordance with the manufacturer to cover the whole joint including nuts and bolts. The Contractor shall provide the required details of quantities in the schedule of particulars.

3.3.2.2.10 Pre-Shipment Inspection

Before the goods are ready for packing and dispatch after production, the Employer or its representative shall have the right to inspect and/or to test the goods to confirm its compliance with the provisions of the approved QAP /specifications. All in-house technical, production and test data related to the goods that may be conducted on the premises by the manufacturer shall be furnished to the Employer or an inspection agent appointed by the Employer, at no charge to the Employer.

The Contractor shall cover the costs related to the services of the inspection agent, but the selection of the agent shall be the solely the responsibility of the Employer.

The Employer or an agent appointed by the Employer will visit the manufacturing premises of the goods being manufactured and satisfy himself either through the in-house test results provided by the manufacturer; or shall draw samples of the goods readied for delivery, and carry out necessary tests on the manufacturing premises to determine that the goods fully comply with the requirements of the contract. Test carried out at the manufacturing premises shall be at no charge to the Employer.

The goods will be packed and shipped only after it has been cleared for shipment by the Employer or an inspection agent appointed by the Employer. The Employer shall notify the Contactor in writing of the identity of the agent, if any, or its representative retained for such purpose.

Should the goods or any part fail to meet the requirements of the specifications, the Contractor shall replace such goods or the part within the time specified for delivery or extension granted. However, under such circumstances the Contractor shall bear the extra costs incurred in connection with additional inspection, failing which the Employer shall be entitled to recover all such costs from any payments due to the Contractor.

The Employer's right to inspect, test and, where necessary, instruct Engineer to reject the goods after delivery to the Employer's stores, shall in no way be limited or waived by reason of goods having previously been inspected, tested and passed by the Employer or its representative prior to the shipment from the country of origin.

Providing always that replacement is possible, the Contractor shall refund to the Employer all amounts paid on account or recovery may be made from the security for performance.

Nothing in this clause, in any way, releases the Contractor from any warranty or other obligations under the Contract. Employer's failure to inspect and accept or reject goods shall not relieve the Contractor from responsibility nor impose liability on Employer, for non-conforming goods.

3.3.2.3 Supply of Goods

3.3.2.3.1 General

All items supplied under this Contract must be new, of first quality, free from defects, and shall be designed to meet the requirements of the specification. They shall be service proved products of specialized manufacturers.

The Contractor shall submit indicative list that the items have performed successfully in similar conditions for at least 5 (Five) years. Alternately if the products have been designed or developed more recently, the Contractor shall prove in a way acceptable to the Engineer that the supplies are suitable in every respect for the work intended and meet the requirements for this contract. In this respect, reliability in operation and ease of maintenance will be considered the decisive criteria.

Each item should be dimensioned as indicated in the drawings or the specified standard or code, where there is a difference between the details and the Contractor's item he shall inform the Engineer of the differences.

3.3.2.3.2 Experience of Manufacturer

The Contractor must show at the time of Bidding that the Manufacture whose product he intends to supply has proven experience and capacity in the manufacture of the type of Goods to be supplied under this contract.

The Contractor must name the manufacturer(s) at the time of Bidding from whom he proposes to obtain any material under the contract. As a proof, he should also include a Letter of Consent from the manufacturer(s) stating his acceptance to sell the material to the Contractor on award of the contract. Normally, the material supplied should be the product from the quoted manufacturer(s). However, in situation beyond the control of the Contractor, the Engineer may consent to accept material from other manufacturer; provided he is satisfied, that the new experienced and capable to produce the material and that the product is either equivalent or superior to the product from the previously agreed manufacture. No orders shall be placed with the newly named manufacturer without the written consent of the Engineer.

Government of Nepal
Ministry of Infrastructure Development
Department of Water Supply and Sewerage Management
Water Supply and Sewerage Management Office

Office Chief

3.3.2.3.3 Equivalency of Standards and Codes

Wherever reference is made in the Contract to specific standards and codes to be met by the items to be furnished, and work performed or tested, the provisions of the latest current edition or revision of the relevant standards and codes in effect shall apply, unless otherwise expressly stated in the Contract. Where such standards and codes are national, or relate to a particular country or region, other authoritative standards which ensure an equal or higher quality than the standards and codes specified will be accepted subject to the Engineer's prior review and written approval. Differences between the standards specified and the proposed alternative standards must be fully described in writing by the Contractor and submitted to the Engineer at least 28 days prior to the date when the Contractor desires the Engineer's approval. In the event the Engineer determines that such proposed deviations do not ensure equal or higher quality, the Contractor shall comply with the standards specified in the documents.

The following is a list of some internationally accepted standards and codes and some associations concerned with the standardization of products and abbreviations below will be used in the following text.

a)	ANSI	American National Standards Institute (Successor of ASA).
b)	AS	Australian Standard
c)	ASTM	American Society for Testing and Materials
d)	AWWA	American Water Works Association
e)	BS	British Standard
f)	DIN	German Industrial Standard
g)	ISO	International Organisation of Standards
h)	JIS	Japanese Industrial Standard
i)	JWWA	Japanese Water Works Association
j)	SIS	Swedish Standards
k)	IS	Indian Standards
l)	NS	Nepalese Standards

3.3.2.3.4 Application

This chapter shall apply to all ductile iron pipes, valves, fittings, appurtenances and other special unless otherwise required by the Specification.

3.3.2.3.5 Works Inspection

The Contractor shall provide a program showing the planned manufacture of items and a schedule of works test. The minimum tests shall be those necessary to show compliance with the required standards. The manufacturer shall give the Engineer 28 days notice of the start of a series of tests and an equivalent amount of notice of the end of the test series. The manufacturer shall give unimpeded access to witness the tests, to the Employer and /or his designated inspection agent.

3.3.2.3.6 Shop Testing and Inspection

The inspection and testing of pipes, valves, fittings and accessories will take place on the manufacturer's premises. The manufacturer shall provide, free of charge, the testing equipment, the needed material, checking devices and necessary trained personnel for each test. The manufacturer of concern goods shall provide for two personnel or representatives of the Employer to witness concern good testing on the concern manufacturer's premises, free of charge, for two periods of 5 days each. The Contractor shall provide, free of charge, for transportation of the Employer's personnel or representatives to and from the manufacturer's premises, accommodation for the Employer's personnel or representatives during the testing periods, and incidental expenses of the Employer's personnel and representatives during the periods of testing.

Tests shall be carried out in accordance with relevant standard as approved by the Engineer. Each successfully tested batch will be identified by a mark. Results of all such tests shall be submitted to the Engineer on a previously approved certificate or form certified by the manufacturer or by a recognized agency.

The pipes, valves, fittings and accessories which show in the opinion of the Engineer minor imperfections unavoidable occurring during manufacturing and not disadvantageous for their use, shall not be rejected and the manufacturer may under his own responsibility decide the method of removing such small visual superficial imperfections. He may also after approval of the Engineer repair certain defaults by any method other than welding.

3.3.2.3.7 Final Acceptance at site

All pipes, fittings, valves and accessories shall conform to the specification at site. Engineer shall carryout necessary inspections at site prior to final acceptance.

Government of Nepal
Ministry of Infrastructure Development
Department of Water Supply and Sewerage Management Office
Water Supply and Sewerage Management Office
Butwal, Rupandehi
Office Chief

3.3.2.4 Ductile Iron Pipe and Fittings

3.3.2.4.1 Pipes and Fitting

3.3.2.4.1.1 General

All Ductile iron pressure pipes and fittings shall comply with ISO 2531(2009), and shall have allowable pressure as stated in tables of ISO 2531(2009) ie. Table 1 and 2 for pipes and Table 3 for fittings. All pipes up to a diameter of 300mm shall be Class C40, socketed unless otherwise specified. Pipes with diameters from 350 to 600mm shall be of Class C30. Pipes greater than 600 mm shall be Class C25.

All components with flanged joints, including pipe and pipe fittings shall be of PN 16 pressure class and shall comply with ISO 2531(2009),.

Considering the geometric design of road of the project area, pipes of smaller effective length is preferred. However, the contractor should carry out pipe layout survey and take approval of the Engineer before placement of order of the pipes and its sizes (diameter and effective length of pipes).

The manufacturer should be equipped with a specific device in order to control wall thickness of pipes.

All DI fittings have to be produced by a process of Sand-Mould cast by using a sand mould plus a resin-sand core, so as to ensure the designed shape (to ensure accurate dimensions that guarantee joint water tightness) and thickness (to ensure strength) of fittings.

3.3.2.4.1.2 Materials

The materials used in the manufacture pipes and fittings shall comply with ISO 2531(2009).

3.3.2.4.1.3 Tests

Tests on pipes and fittings shall be carried out in accordance with ISO 2531(2009). The Employer shall be permitted free access to the place to manufacture for the purpose of examining and witnessing the testing of pipes and fittings.

3.3.2.4.2 Joints

3.3.2.4.2.1 Flexible non restrained (push fit)

These shall be flexible spigot and socket joints with sockets integral with the pipes and incorporating rubber rings recommended by the manufacturer and approved by the Engineer. Elastomeric gasket components shall comply with ISO 4633.

All push on joints shall be designed to be fully flexible: consequently, the allowable angular deflection certified by the manufacturer shall not less than the allowable deflection has been described in Article 5.2.2 of ISO 2531-2009, but preferably to provide below angular deflection degree in order to achieve the best protection to the safety of the pipeline in the event of unequal ground settlement due to the earthquake and swampy area.

All joints shall be designed to provide sufficient axial movement; the manufacturer shall declare the allowable withdrwal.

3.3.2.4.2.2 Mechanical joints

These shall be flexible spigot and socket joints with the sockets integral with the pipes. The joint shall be sealed by compressions of a rubber ring in the socket by means of bolting. The joint shall be suitable for use on the spigot of normal push fit jointed pipe.

3.3.2.4.2.3 Restrained joints

These shall be push fit type joints and shall incorporate some means of preventing the spigot being withdrawn from the socket once the joint is made. The joint shall be able to withstand the forces imposed when testing the pipeline using an end cap fixed with the restrained joint.

The restrained joints and anchoring system solution of DI pipes and fittings shall be featured with separate water tightness and anchorage system functions.

The manufacturer of DI pipes and fittings with restrained joint shall need to demonstrate:

1) Restrained joints and anchoring system shall be available for all range of pipes between 150mm to 500mm.
2) Present test certificate from reputable third party inspection organization, to certify that the manufacturer's design of restrained locking system fully satisfy the prescribed angular deflection by the manufacturer.
3) Evidences of deliveries of such anchoring system, within the Ductile Iron pipeline group, on identical projects (same pipe size and pressure rating) over the past 5 years.

Government of Nepal
Ministry of Infrastructure Development
Department of Water Supply and Sewerage Management
Water Supply and Sewerage Management Office
Office Chief

3.3.2.4.2.4 Flanged Joints

All flanges shall comply with ISO 7005-2 or EN 1092-2. Joint sets shall be provided with all necessary nuts, bolts, washers and gaskets. The Contractor shall also supply in suitable containers sufficient graphite grease for application to the bolt threads when joints are made.

3.3.2.4.2.5 Nuts, Bolts and Washers

Nuts, bolts and washers shall be suitable for PN 16 Pressure Rating with ISO 2531(2009) or BS EN 1092-2 flanges and shall be made of steel with hot dipped cadmium coating or equivalent. Bolts shall be of sufficient length that one thread shall show through the nut when in the fully tightened condition.

3.3.2.4.2.6 Gaskets and Joint Rings

Joint rings shall be manufactured to conform to ISO 4633 and shall be of chloroprene rubber or other approved synthetic material suitable for temperatures up to 80°C.

Gaskets for flanged joints may be inside the bolt circle type and shall comply with BS EN 1514 or ISO 7483. Alternatively the gasket shall be to the full diameter of the flange, drilled to suit the appropriate bolt provisions.

Until immediately required for incorporation in a joint, each rubber ring or gasket shall be stored in the dark, free from the deleterious effects of heat or cold, and kept flat so as to prevent any part of the rubber being in tension.

Only lubricants suitable for use with potable water and recommended by the manufacturer shall be used in connection with rubber rings and these lubricants shall not contain any soluble constituent, shall be suitable for the climatic conditions at the Site and shall contain an approved bactericide.

3.3.2.4.3 Puddle and Thrust Flanges

Puddle and thrust flanges shall comply with Clause 3.3.2.4.1 but remain un-drilled.

3.3.2.4.4 Internal Linings

3.3.2.4.4.1 Pipes

The pipes shall be internally lined in the factory with a sulphate resisting or portland cement mortar. The thickness and the lining shall be in accordance with ISO 4179. Prior to application of the lining the internal surfaces shall be shot blast cleaned to acceptable standard. The lining shall be applied centrifugally. The cement composition shall conform to BS 4027 or BS EN 197-1.

Certain sections are amplified as follows:

No additives shall be used without the written approval of the Engineer, and shall be used strictly in accordance with the manufacturer's recommendations.

The thickness of the lining at any one point shall not be less than the specified minimum thickness.

All linings shall have a smooth uniform surface finish.

3.3.2.4.4.2 Fittings

The fittings shall be internally lined in the factory with Fusion bonded epoxy 200 microns, in accordance with EN14901-2006. The epoxy coating shall be for potable water by test certificate from international health institute, shall be abrasion, resistant and shall be subject to approval of the Engineer. Prior to application of the lining the internal surfaces shall be shot blast cleaned to acceptable standard. All linings shall have a smooth uniform surface finish.

3.3.2.4.5 External Coating

3.3.2.4.5.1 General

Unless otherwise specified, ductile iron pipes and fittings shall be zinc coated with bitumen over coating, all in accordance with the following Specifications. Buried pipes and fittings shall also have a site or factory applied polythene sleeving. Pipe coatings shall be inspected on site and any damage or defective areas made good to the satisfaction of the Engineer.

3.3.2.4.5.2 Zinc Coating

Zinc coating shall comply with ISO 8197 and shall be applied as a spray coating. The mass of sprayed metal shall not be less than 130 to150 g/m2 as described in the standard.

3.3.2.4.5.3 Bitumen Coating

Bitumen coating shall be of normal thickness 0.07 mm unless otherwise specified. It shall be a cold applied compound complying with the requirements of BS 3416 Type II, suitable for tropical climates, factory applied in accordance with the manufacturer's instructions.

Damaged areas of coating shall be repainted on site after removing any remaining loose coating and wire brushing and rusted areas of pipe.

Government of Nepal
Ministry of Infrastructure Development
Department of Water Supply and Sewerage Management Office
Water Supply and Sewerage Management Office
Butwal, Rupandehi
Office Chief

3.3.2.4.5.4 Polyethylene Sleeving

Unless indicated otherwise, polyethylene sleeving shall be provided in addition to bitumen coating. Polyethylene sleeving shall comply with ISO 8180 and be marked in accordance with AWWA C105.

Site applied sleeving shall be stored under cover, out of direct sunlit, and its exposure to sunlight shall be kept to a minimum. Pipes having a factory applied sleeving must be stored in the same conditions.

3.3.2.5 Slip-on Type couplings

Slip-on type couplings shall include the following couplings:

- a) Straight flexible couplings;
- b) Stepped flexible couplings;
- c) Flange adapters
- d) Dismantling joints.

Slip-on type couplings shall be procured from approved Contractors and suitable for use with ductile iron pipes manufactured to ISO 2531. These shall be capable of withstanding the test pressures appropriate to the pipes for which they are supplied.

The preparation of pipe ends for slip-on type couplings shall be in accordance with the requirements of and the tolerances specified by the joint manufacturer. Couplings shall be installed fully in accordance with the manufacturer's recommendations.

Gaskets, bolts, nuts, glands, end rings, and hardware for pipe couplings of all types shall be furnished by the manufacturer of the pipe coupling and shall be designed as an integral system by the pipe coupling manufacturer. Gaskets shall be designed for the coupling and appropriately sized to provide a watertight seal at the design pressure and temperature. Gaskets, bolts, nuts, glands, end rings and hardware for pipe couplings shall be shipped with the pipe coupling and shall be clearly labeled indicating the origin of the material, place and date of manufacture. Manufacturer's printed installation instructions shall be packaged with each pipe coupling.

The Contractor shall follow the manufacturer's recommendations as to the methods and equipment to be used in assembling the joints. In particular, the Contractor shall ensure that rubber rings are correctly positioned and free of twists. The rubber rings and any recommended lubricants should be obtained only from the coupling manufacturer.

All nuts, bolts and washers used in the construction of the coupling shall be cadmium plated. Flanges which mate with pipes, fittings and valves shall be drilled to BS EN 1092-2 (ISO 2531)

3.3.2.6 Mechanical Coupling

Mechanical coupling shall be made of cast iron. The mechanical coupling shall be able to join to plain ended pipe and withstand a pressure of at least 25 bar after jointing. The mechanical coupling shall be designed as dismantling pieces suitable to slip into a broken main. The mechanical coupling should be supplied with adequate number of nut, bolts and gaskets.

3.3.2.7 Valves

Vales supplied shall be as per internationally recognized standards suitable for ISO 2531 ductile Iron Pipes. All materials of manufacture shall be suitable for use with water at temperatures up to 45 deg. C.

Valves shall be suitable for frequent operation as well as operation after long periods of idleness in either open or closed position. The valve steam, thrust washers, screws, nuts and all other components exposed to drinking water shall be of corrosion resistant grade of stainless steel.

Sluice valves and butterfly valves shall be suitable for flow in either direction.

The gate, sluice/butterfly vales shall have full clear bore to nominal diameter to achieve optimum flow. The operating torque shall minimum according to relevant standards of valves.

For sluice/gate vales back seating arrangement shall be provided.

Unless otherwise specified, all standard valves shall be flanged type where flanges shall be of PN 16 and complying with ISO 7005-2, EN 1092-2.

Pressure testing shall be according to ISO 5208. Test certificates shall be supplied with each valve.

The Engineer shall have the right to reject any casting, forging, bearing etc and the Supplier shall replace any such defective parts at his own expense.

The following records and drawings of all types of valves shall be made available by the Contractor for inspection.

1) Drawings showing overall dimensions, valve construction and settings
2) Data related to pressure ratings, weights and materials of manufacture (each component)
3) Test certificates of works tests
4) Performance data of air valves
5) Seating design and the seating materials of butterfly valves

3.3.2.7.1 Types of Control Valves

3.3.2.7.1.1 Butterfly Valves

All butterfly valves shall be double flanged eccentric butterfly valve designed according latest version of ISO 10631 or EN 593 or EN 1074-1 and 2 and should have integral standing feet. All butterfly valves shall be through plant test according to ISO 5208 checked All butterfly valves shall be operated by manual. The manual actuators can be replaced by motorized actuator. All valves shall have nominal pressure rating PN16 unless indicated otherwise in the Drawings or Bill of Quantities.

Valves shall be bubble-tight at rated pressures in either direction, and shall be satisfactory for applications involving throttling service and for applications requiring valve actuation after long periods of inactivity. Valve discs shall rotate 90° from the full open position to the tight shut position. Regardless of valve size, angular misposition of disc can be up to 1° off center without leakage.

Flange drilling of each butterfly valve shall be according to ISO 7005-2 or EN 1092-2 and face to face dimension shall be according to ISO 5752 series 14. Materials of component of all butterfly valves shall be as follows:

a) Body: Ductile iron
b) Disc: SG 400-15 ductile iron to BS 2789
c) Shaft: stainless steel 304 in self lubricants bushes
d) Internal bolts, nuts and set screws: stainless steel
e) Body and disc painted with epoxy 250 micron thick
f) Marking: each butterfly valves shall have following marking

On the Body like EN19

Nominal diameter in mm (DN)
Nominal pressure in bar (PN)
Type of ductile iron;
Manufacturer's logo;
Model code;
Fusion date.

On the label like EN19:

Nominal diameter in mm (DN);
Nominal pressure in bar (PN);
Maximum operating pressure (PFA);
Closing direction;
Model code;
Manufacturing order, Order confirmation;
Manufacturer's logo.

On the disc:

Nominal diameter in mm (DN);
Nominal pressure in bar (PN);
Type of ductile iron;
Manufacturer's logo;
Model code.

The Contractor shall provide a test certificate confirming that the valves have been tested in accordance with BS 5150 and stating the actual pressures and medium used in the test. In addition the Contractor shall ensure that the Employer has access to the manufacturer's works at all reasonable times for the purposes of inspecting the assembled valves and witnessing testing.

Government of Nepal
Ministry of Infrastructure Development
Department of Water Supply and Sewerage Management
Water Supply and Sewerage Management Office
Office Chief

3.3.2.7.1.2 Gate Valves

All Gate valves shall be double flanged valve designed according latest version of ISO 7259. All Gate valves shall be operated by manual and motorized actuator valves. All valves shall have nominal pressure rating PN16 unless indicated otherwise in the Drawings or Bill of Quantities

Gate valves shall comply with plant test acording to ISO 5208. All valves shall be suitable for use with potable water.

Specific Clauses are amplified as follows:

a) Types of valves: Solid with non-rising stem.

b) Face to face dimension: Shall be as per ISO 5752 series 14, BS EN 558 Series 3

c) Flanged and drilled to BS EN 1092-2, ISO 7502-2 PN-16

d) Nominal Pressure: PN 16 unless otherwise indicated in the Price Schedule.

e) The valve Body and other uncoated ferrous part shall be painted with epoxy paint 250 micron thick.

f) Marking

On body:

Nominal diameter in mm (DN),
Nominal pressure in bar (PN).

On identification label:

Reference of valve
Closing direction (FSH / FAH)-nominal diameter (DN)-flange drilling
Year and month of manufacture-number,
Number of the norm

The Contractor shall provide a test certificate confirming that the valves have been tested in accordance with ISO 5208, BS 5150 and stating the actual pressures and medium used in the test. In addition the Contractor shall ensure that the Employer has access to the manufacturer's works at all reasonable times for the purposes of inspecting the assembled valves and witnessing testing.

3.3.2.7.1.3 Globe Valve

Globe Valve are used for throttling purpose. All Globe valves shall be double flanged valve of minimum 16 PN rating. The valves shall be designed, manufactured and tested in accordance with BS 1873, BS EN 558-1 or ISO 12159 Standard. The valves shall be certified to be Lead-Free in accordance with NSF/ANSI 61, Annex G.

Manufacturer shall have a quality management system that is certified to ISO 9001 by an accredited, certifying body.

The body ends are in line with each other and the disc is lifted from or lowered on to the body seat by a stem whose axis is at right angles to that of the body ends. In globe valves, the pressure acts on the underside of the valve disc and there is a change of direction of flow inside the valve body.

Face to Face Dimension shall be according to EN 1092-1 and all Globe valves shall be tested as per ISO 5208:2008(E)

3.3.2.7.1.4 Ball Valves

All Ball valves shall be double flanged valve. The valves shall be designed, manufactured and tested in accordance with American Water Works Association Standard ANSI/AWWA C507. The valves shall be certified to be Lead-Free in accordance with NSF/ANSI 61, Annex G.

Manufacturer shall have a quality management system that is certified to ISO 9001 by an accredited, certifying body.

The valve shall be constructed with a two-piece body rated for 160 psi and with end flanges in full conformance with ANSI B16.1 Class 125 or Class 250. The main body section and end piece shall contain integrally cast support feet and lifting lugs.

The valve port shall be a 100% clear bore equal to the nominal valve size with no seat hardware in the flow stream when fully open.

Double (or single) resilient seats shall provide drop-tight service and shall be located on the ball and mechanically retained with a stainless steel retaining ring and stainless steel nylok cap screws, which shall pass through both the resilient seat and the retaining ring. The retaining ring shall be continuous or investment cast with overlapping sections, serrated grooves and shoulders. The resilient seat shall be field adjustable and replaceable without removing the valve from the pipeline and mate to a continuous 316 stainless steel body seat ring.

Valve shafts shall be inserted into blind hubs in the ball and locked to the ball with taper pins retained with stainless steel jam bolts. The shaft shall be sealed with resilient grit seals in the body bores.

Teflon-lined, fiberglass-backed sleeve bearings shall be located in the body hubs.

An adjustable thrust bearing shall be provided to center the ball in the body.

Shaft seals shall be of the V-type and shall be replaceable without removal of the valve from the line or the shaft from the valve.

Valve interiors and exteriors shall be coated with an NSF/ANSI 61 certified fusion bonded epoxy in accordance with AWWA C550.

Manual actuators shall be of the traveling nut design with characterized closure per AWWA C507 and equipped with externally adjustable closed position stops capable of withstanding 450 ft-lbs. Actuators shall be lubricated with EP-2 grease and fully enclosed in an iron housing sealed against the entry of water.

Cylinder actuators shall be traveling nut design with characterized closure sized to position the valve with an air, water or oil supply pressure of 80-150 psi and built in accordance with AWWA C541. The rotating mechanism will consist of a lever and traveling nut directly connected to the cylinder rod. The cylinder rod, heads and barrel shall be constructed of stainless steel or non-metallic material for water service. Rod and piston seals shall be of the self-adjustable, wear- compensating type. The piston shall be one-piece with a wear strip.

Motor actuators shall be furnished in accordance with AWWA C542 for Power Actuators and factory tested on the production ball valve. The motor unit shall be mounted to a self-locking traveling nut actuator with characterized closure and externally adjustable closed stop. The motor actuator assembly shall be designed for open/close service with a minimum operating time of 60 sec.

The Contractor shall provide a test certificate confirming that the valves have been tested in accordance with American Water Works Association Standard ANSI/AWWA C507. In addition the Contractor shall ensure that the Employer has access to the manufacturer's works at all reasonable times for the purposes of inspecting the assembled valves and witnessing testing.

3.3.2.7.2 Automatic Air Relief Valves

3.3.2.7.2.1 Design of Air Valves

Automatic air relief valves shall be designed to meet the following conditions:

a) Discharge air during charging of the pipeline

b) Admit air during emptying of the pipeline, or when the pipeline pressure falls below atmospheric pressure during a surge event

c) Discharge air accumulated at local peaks along the pipeline under normal operating condition.

Conditions (a) and (b) shall be met by the employment of a large orifice capable of handling large volumes of air at a high flow rate, and condition (c) by a small orifice capable of discharging small quantities of air as they accumulate.

Valves with air intakes or exhaust facilities shall have approved screening arrangements to prevent the ingress of air borne sand.

3.3.2.7.2.2 Types of Air Valves

a) Double Acting Air Valves

These shall combine both large and small orifices within one valve. The large orifice shall be sealed by a rigid float and the chamber housing shall be designed to avoid premature closing of the valve by the air whilst being discharged.

The small orifice shall be sealed by a float at all pressures above atmospheric except when air accumulates in the valve chamber.

b) Single Air Valves

These include a small orifice only operating in a manner identical with the small orifice in a double acting valve.

3.3.2.7.2.3 General Specification

The nominal pressure range shall be PN 16 unless indicated otherwise in the price schedule. All air valves shall be made as per EN 1074-1 to 1074-4. In case flanged air valves the flange shall be as per EN 1092 -2 or ISO 7005-2.

Body ends shall be flanged with raised faces and drilled according to latest version of EN 1092-2 (ISO 7005-2).

The materials for the valves shall be as follows:

Body cover and cowl	-	Ductile Iron SG 400-15 to latest version of BS 2789
Small orifice	-	Ductile iron with gunmetal seat
Small orifice float		Rubber covered or other approved

Office Chief

Large orifice	-	Ductile iron with rubber seat
Large float	-	Vulcanite covered or other approved

Body and other uncoated ferrous parts painted with epoxy 250 micron thick

3.3.2.7.2.4 Tests

Test certificates shall be provided with each valve showing.

a) Hydraulic testing to at least 1.5 x working (rated) pressure or high pressure strength test
b) Low head leakage tests
c) Small orifice testing
d) Large orifice discharge test

During the tests the air flow rates shall be measured by orifice plates in accordance with latest version of BS 1042. Pressures (positive and vacuum) shall be measured by Bourdon tube gauges in accordance with latest version of BS 1780, or by means of mercury-in-glass manometers. The temperature of the flowing air shall be measured in accordance with latest version of BS 1041: Part 1 and Part 2. The barometric pressure shall also be measured.

3.3.2.7.3 Ball Float Valves

Ball float valves shall be designed for installation on the inlet pipe of a storage tank to shut the water off automatically when it reaches a predetermined level. They shall be of the single or double beat type or pilot operated with direct float and lever operation.

The valve shall be either full open or full closed and the design characteristic of the valve controls causes the main valve piston to modulate (close slowly) over the last few inches of filling.

Valves shall be designed for the working pressure specified and shall be tested for leakage at that pressure, when they should be drop tight. They shall be tested for body and valve element strength with the valve closed and a test pressure 1.5 times the working pressure applied to the inlet end.

The body end shall be flanged, faced and drilled to BS EN 1092 – 1: 2007 Valves shall not contain brasses containing more than 5% zinc. Gunmetal (to BS EN 1982:2008 Grade LG 2), aluminum bronze or nickel copper alloy may be used for internal components.

The body or stopper shall be of ductile iron. Floats shall be copper or glass fibre. The lever and links shall be of mild steel with bronze pins.

Where a stilling tank arrangement is required it shall accommodate a cheese type float mounted on a central tube connected to the valve operating lever and sliding vertically on a guide rod secured to the base of a galvanized wrought iron cylindrical tank perforated at the base.

3.3.2.7.4 Non Return Valve/Check Valve

Unless otherwise specified, check valves shall be swing type conforming to BSEN 12334:2001 with a pressure rating of PN 16 (i.e. 16 bar). Check valves shall be constructed so that disc, seat, seat rings and other internal working parts, which may become necessary for repairs, shall be readily accessible, removable and replaceable without use of special tools and removing the valve from the line. The valve body and the disc shall be of ductile iron complying with BS EN 1563 : 1997 and having smooth operating stainless steel hinge pins with gun metal bushes, EPDM / SBR encapsulated discs. They shall possess high speed closing characteristics with minimum shock on closing. All valves shall be tested to BSEN 12334:2001 and as specified in BSEN 12266-1 : 2003 and the test certificates issued by the manufacturer shall be submitted. All check valves shall be coated to as specified in clause 1.7 above. The flange drilling shall comply with BSEN 1092-1:2007, BSEN 1092-2:2007 or BSEN 1092-3:2007.

The body shall have an inspection cover on the top, through which the body can be cleaned and the disk exchanged.

- Installation position is horizontal
- Dimension: short widths
- Flanged connections according to ISO, EN, DIN

3.3.2.7.5 Pressure Reducing Valves

3.3.2.7.5.1 General

Pressure reducing valves shall be hydraulically operated pilot controlled diaphragm valve of a similar design to the flow control valve.

The valve shall limit the downstream pressure to the specified value regardless of the flow. The valve shall be controlled by a differential pilot valve sensing the downstream pressure.

The main valve shall consist of a removable Aluminum-Bronze seat and resilient rubber seal fully supported by a seal disc.

The stem will be guided at the top by a replaceable guide bearing in the valve bonnet, and at the bottom, by an Aluminum-Bronze centering device, connected to the seal disc and moving freely inside the seat.

No bottom guide bearing is permitted.

The synthetic rubber diaphragm will be fully supported, top and bottom, by rigid discs and will be connected to the stem in a way which enables fast and easy replacement on site.

No external packing gland and piston activation is permitted.

The valve will be equipped with a position indicating rod.

The pilot system shall contain a differential pilot designed to close when the controlling pressure exceeds the adjustable spring setting. The pilot control is normally held open by the force of the compression on the spring above the diaphragm and it closes when the pressure acting on the underside of the diaphragm exceeds the spring setting. The pilot control system shall contain a fixed orifice. No variable orifices shall be permitted.

The orifice plate flange assembly shall be of non ferrous material.

Small diameter non ferrous pipe work, valves, strainers shall be provided to allow operation of the system.

All ferrous items shall be protected by an epoxy coating with a minimum 300 microns thickness.

3.3.2.7.5.2 Tests

Each pressure reducing valve shall be tested at the manufacturer's works as follows:

- Body strength: closed end test, valve open, test pressure 1.5 times working pressure
- Valve element strength: open end test, valve closed, test pressure applied to inlet end of 1.5 times working pressure
- Leak tightness: open and test, valve closed, test pressure of the working pressure applied to inlet end, no visible leakage permitted.

Test certificates shall be supplied with every valve.

3.3.2.7.6 Flap Valves

Flap valves shall be circular door double hung. The valve shall be suitable for mounting on a wall or flanged pipework thimble. Valves for flange fixing shall be suitable for flanges drilled to BS EN 1092-2 (ISO 2531).

3.3.2.7.6.1 Materials:

- Frame - Ductile Iron BS 2789
- Door - Ductile Iron BS 2789
- Sealing faces - Copper Alloy
- Hinge links - Mild Steel
- Hinge brackets - Ductile Iron BS 2789
- Hinge Pins - Bronze

All ferrous metal parts shall be painted with epoxy paint 250 microns thick.

3.3.2.7.6.2 Tests

Flap valves shall be tested with a head of 5 m for free operation in opening and closing and for leak tightness. A certificate shall be provided with each valve.

3.3.2.7.7 Rubber Expansion Joints

The rubber expansion joints shall provides single and multiple arch rubber expansion joints and the flanges are carbon steel/stainless steel drilled such as standard drillings to our pipe's flange specifications. The supplied rubber joints for installation shall have minium following features:

1. Body shall be made of CR, EPDM, IIR, NBR, CSM, VITON material
2. Reinforcement shall be of Nylon Cord Fabric or equivalent material
3. Wire shall be Hard Steel Wire

In addition to above features, the Rubber Expansion Joints shall have:

1. Greater movements provide high level of installation flexibility.

2. Precision molded of synthetic rubber reinforced with nylon cord.
3. Excellent ability to absorb vibration and sound, withstands high pressures (minimum of 15 bar).

Office Chief

3.3.2.7.8 Extension Spindles, Tee - Keys and Caps

The depths of installation of all valves are as indicated in the BOQ descriptions (or as shown on the drawings) and a Tee - Key for the operation of valves shall be supplied in the following manner.

Four Tee - Keys for each size of valves to be supplied. The maximum length of Tee key shall be limited to 1m and Valves shall be provided with extended spindle to the Valve. The material of Tee - Keys shall be galvanized mild steel.

In case extension spindles are necessary, extension spindles shall be provided with suitable bearings, which are rigidly held on brackets or stays. Bearings and extension spindles shall be suitably protected against corrosion.

Where a valve does not require an operating or extension spindle, the valve spindle shall be protected with a properly fitting cap as per BS 5163: 2004.

3.3.2.7.9 Fire Hydrants

The fire hydrant shall be Traffic Fire Hydrant type. Traffic fire hydrant shall be dry-barrel fire hydrant complying with AWWA C502 and AWWA C550. Main valve seat opening shall be at least 115 mm. The nozzle section shall consist of two (2) x 2 ½" hose nozzles and one (1) x 2 ½" pumper nozzle, all of bronze alloy material. Thread types shall be as approved by the Engineer.

Hydrants shall have non-corrosive drain valves.

Hose and pumper caps shall be cast iron chained to the hydrant.

Hydrants shall be so designed, that in the event of accident, or breaking of the hydrant above or near grade level, the main valve will remain closed.

Operating threads shall be sealed from water at all times, when the valve is either in the open or closed position. The operating nut shall be made of bronze.

Fire hydrants shall be rated at PN 16.

Fire hydrant body shall be made of ductile iron.

Internal and external coating shall be epoxy as per AWWA standards. External color shall be fire red.

3.3.2.7.10 Pressure Gauges

Pressure gauges shall be oil-filled and of brass and black molded phenol plastic construction with acrylic plastic or toughened glass windows. Dials shall be at least 75mm diameter.

Internal gauge components shall be stainless steel or other corrosion resistant material with an accuracy of at least +1 percent of full scale. Gauges shall wherever possible operate about their mid-scale position. No aluminum shall be used in the construction of gauges. Scales shall be calibrated in meters head for water. Gauges shall be fitted with ball valve isolation valves and shall be equipped with a combined isolating valve and air release vent.

3.3.2.7.11 In-line Basket Strainer

This specification covers strainers to block or strain objects greater than 3/16" diameter, designed to prevent objects such as stones and pebbles from entering and causing physical damage to the PRV.

The strainer should be designed for minimum weight and pressure loss.

The screen shall be made of perforated stainless steel and shaped to give maximum rigidity against flow steam forces

An access cover plate shall be provided.

The effective straining area shall be at least double that of the inlet.

Housing and cover shall be cast iron or ductile iron. Raised letters indicating flow direction will be clearly visible.

Casing bolts, nuts, screws and washers shall be stainless steel.

Head loss at maximum flows shall not exceed 3.0 psi.

3.3.2.7.12 Surface Boxes

Surface boxes shall be Ductile iron, grade "A" heavy duty complying to BS 5834 Part 2 : 1983 with the minimum clear opening sizes (mm), of 100mm, 135mm,225mm and 300mm depending on the location and as specified in the BOQ.

Surface boxes shall be painted before installation with two coats of bituminous paint. They shall be with captive hinge arrangement to prevent vandals and with suitable watertight arrangement to prevent ingress of surface water into the keyhole. The hinge pin shall be made from steel or ductile iron manufactured to suit the design and dimension of the unit.

The diameter of the hinge pin shall not be less than 6mm. The lids or covers of surface boxes shall have cast in-letters of words in English to indicate the function of the fittings as "FH, VVO, SV, METER" and also the marking "WATER" in suitable size, cast in raised letters.

3.3.2.8 Polyethylene Pipes and Fittings

3.3.2.8.1.1 Polyethylene Pipes of PE-100 for 10 kg pressure pipe

The term "material" shall mean all materials and articles of every kind whether raw, processed or manufactured which are used in the manufacture of the Goods to be supplied under the Contract.

These specifications are for Polyethylene Pipe for Distribution Network of Dia 50 mm and above outside diameter (OD) and house service connections of Dia 20 mm OD. All these polyethylene pipes hereinafter referred as PE-100 pipes HDPE pipes used for 6, 10, 12.5 and 16 PN. The following general standards shall apply

ISO 4427-2007 : Plastics piping systems - Polyethylene (PE) pipes and fittings

Nepal Standard NS : 40 - 2079 Published by Nepal Bureau of Standards and Metrology

Raw Material and Pressure Rating

Raw material used to Manufacture PE-100 Polyethylene Pipe shall be Virgin Natural Resin PE100 containing those anti – oxidants, UV Stabilizers & Pigments necessary for Manufacturing of pipes. The Density of Pipes shall be confirming to ISO 4427 Standard. The PE100 Resin shall have minimum required strength (MRS) of 10 Mpa (MRS at 50 years and 20 degree Celsius). Pressure rating for different diameters PE-100 pipes shall be according to table (below)

Effects on Water Quality

The PE-100 Pipes shall confirm to clause 3.5 of ISO 4427 for conveyance of Water for Human Consumption. Also the pipes intended for conveyance of Potable water for Human consumption to be tested to comply with BS 6920 specifications in Internationally Reputed Laboratories and certificate of compliance to be produced for the following parameters:

Odour & Flavour of Water

Appearance of Water

Growth of Micro Organism

Extraction of substances that may be of concern to Public Health (Cyto Toxicity)

Extraction of Metals

Colour of Pipes

The Colour of PE-100 Pipes shall be BLACK with BLUE stripes confirming to Clause 3.2 of ISO 4427.

Dimensions

The pipe dimensions shall be as per latest revisions of Clause 4.1 of ISO 4427. The length of straight pipes and coil shall be according to agreed length or coil-size between Contractor and the Employer. The internal diameter, wall thickness and other dimensions of pipes shall be as per relevant tables of ISO 4427. Each pipe shall be of uniform thickness throughout its length.

The dimension tolerances shall be as per ISO 4427 clause 4.1.3

Performance requirements

The Pipe supplied should have passed the acceptance test as per ISO 4427. The manufacturer should provide the test certificates for the following tests.

Melt Flow Rate,

Density,

Oxidation and Induction test,

Hydrostatic Test ,

Pigment dispersion Test,

Longitudinal Reversion Test.

These tests should be performed in the in-house laboratory of the pipe manufacturer. The Employer will depute Third Party Inspection Agency to the pipe manufacturing facility of the manufacturer to inspect the pipes as per QAP approved by Engineer In charge. The cost for the inspection and tests shall be borne by bidder/operator.

Marking

All pipes shall be permanently marked in such a way that the marking does not initiate cracks or other types of failure and such that normal storage, weathering, handling, installation and use does not affect the legibility of the marking.

The marking shall be such that it is legible without magnification.

The minimum required marking shall be in accordance with Table 6 of ISO 4427-2, with the frequency of marking being not less than once in 5 meter.

3.3.2.8.1.2 Polyethylene Pipes of PE-80 100 for 6 kg pressure pipe

The term "material" shall mean all materials and articles of every kind whether raw, processed or manufactured which are used in the manufacture of the Goods to be supplied under the Contract.

These specifications are for Polyethylene Pipe for Distribution Network of Dia 50 mm to 180 mm outside diameter (OD). All these polyethylene pipes hereinafter referred as PE-80 pipes or HDPE pipes of 6 PN.

Raw Material and Pressure Rating

Raw material used to Manufacture PE-80 Polyethylene Pipe shall be Virgin Natural Resin PE80 containing those anti – oxidants, UV Stabilizers & Pigments necessary for Manufacturing of pipes. The Density of Pipes shall be confirming to ISO 4427 Standard. The PE80 Resin shall have minimum required strength (MRS) of 6 Mpa (MRS at 50 years and 20 degree Celsius).Pressure rating for different diameters PE-80 pipes shall be according to table (below)

Effects on Water Quality

The PE-80 Pipes shall confirm to clause 3.5 of ISO 4427 for conveyance of Water for Human Consumption. Also the pipes intended for conveyance of Potable water for Human consumption to be tested to comply with BS 6920 specifications in Internationally Reputed Laboratories and certificate of compliance to be produced for the following parameters:

Odour & Flavour of Water

Appearance of Water

Growth of Micro Organism

Extraction of substances that may be of concern to Public Health (Cyto Toxicity)

Extraction of Metals

Colour of Pipes

The Colour of PE-80 Pipes shall be BLACK with BLUE stripes confirming to Clause 3.2 of ISO 4427.

Dimensions

The pipe dimensions shall be as per latest revisions of Clause 4.1 of ISO 4427. The length of straight pipes and coil shall be according to agreed length or coil-size between Contractor and the Employer. The internal diameter, wall thickness and other dimensions of pipes shall be as per relevant tables of ISO 4427. Each pipe shall be of uniform thickness throughout its length.

The dimension tolerances shall be as per ISO 4427 clause 4.1.3

Performance requirements

The Pipe supplied should have passed the acceptance test as per ISO 4427. The manufacturer should provide the test certificates for the following tests.

Melt Flow Rate

Density,

Oxidation and Induction test,

Hydrostatic Test,

Pigment dispersion Test,

Longitudinal Reversion Test.

These tests should be performed in the in-house laboratory of the pipe manufacturer. The Employer will depute Third Party Inspection Agency to the pipe manufacturing facility of the manufacturer to inspect the pipes as per QAP approved by Engineer In charge. The cost for the inspection and tests shall be borne by bidder/operator.

Marking

All pipes shall be permanently and legibly marked in such a way that the marking does not initiate cracks or other types of failure and such that normal storage, weathering, handling, installation and use does not affect the legibility of the marking.

The marking shall be such that it is legible without magnification.

The minimum required marking shall be in accordance with Table 6 of ISO 4427-2, with the frequency of marking being not less than once in 5 meter.

Office Chief

3.3.2.8.1.3 Compression Fittings

Compression fittings used for House service connection comply as per ISO 14236

Material of Construction

Compression fittings material shall confirm to ISO14236.Clause -5.

a. .Body-Polypropylene

b. Nut / Cap –Polypropylene.

c. Clip Ring-POM (Acetylic resin)

d. Packing bush- Polypropylene

e. "O" ring – NBR

f. Threaded metal inserts –SS 304 with BSP Threads

Pressure testing

The pressure rating of compression fittings as per clause 8 of ISO 14236 which shall be PN16

Dimensions

The Dimension of compression fittings shall be as per clause 7.1 of ISO 14236

Performance requirements

The compression fittings shall be tested as per ISO 14236. Following Test methods shall be performed.

Clause 8.2.1 -Leak tightness under internal pressure.

Clause 8.2.2 -Resistance to Pull out.

Clause 8.2.3 -Leak tightness under Internal Vaccum.

Clause 8.2.4 -Long term Pressure Test for Leak tightness for assembled joint

Clause 8.3.2.1 -MRS Value as per ISO 9080

Clause 8.3.3.1 -Resistance to Internal pressure.

Effects on Quality of Water

The Compression fittings for intended for conveyance of Potable water for Human consumption to be tested to comply with BS 6920 specifications in any of their Certified Laboratories and certificate of Compliance to be produced for the following parameters:

a Odour & Flavour of Water.

b. Appearance of Water.

c. Growth of Micro Organism

d. Extraction of substances that may be of concern to Public Health (Cyto Toxicity)

e. Extraction of Metals.

For clear identification of the water services, the nuts of the fittings should be coloured blue while thebody to be black. All fittings with threaded ends should be with BSP threads.

3.3.2.8.1.4 U PVC Ball Valves (Stop Cocks)

Ball Valves used for HOUSE Service Connections comply to ISO 4422, Part 4.

Material of Construction

Ball Valve material shall confirm to as per clause 4 of ISO 4422.

a. Body and Handle - UPVC

b .Seals - PTFE

c .O-rings – NBR/EPDM

d. Material of Construction for compression end will as per specifications for compression fittings.

Pressure Rating

The Pressure of the Ball Valve shall be as per ISO 4422 shall be PN 16.

Dimensions

The Dimensions of the Ball Valve shall be as per Table 3 of ISO 4422.

Performance Requirements

The Ball valves shall be tested as per ISO 4422. Following test methods will be performed.

Clause 7.1 - Resistance of Valve Bodies to internal pressure

Clause 7.2 - Crushing Test

Clause 7.3 - Endurance Test

Clause 7.4.2 - Seat and Packing Test

Clause 7.4.1 - Operating torque Test

The Ball Valves intended for conveyance of Potable water for Human consumption to be tested to comply with BS 6920 specifications in any of the laboratories like DVGW / KIWA / SPGN / WRc –NSF and certificate of compliance to be produced for the following parameters :

a. Odour & Flavour of Water.

b. Appearance of Water.

c. Growth of Micro Organism

d. Extraction of substances that may be of concern to Public Health (Cyto Toxicity)

e. Extraction of Metals.

3.3.2.8.1.5 DI CLAMP SADDLE FOR SERVICE CONNECTIONS

General Specifications

Clamp saddles for service connection from water distribution mains shall be of wrap around design, wide skirt and wide straps supports, which shall reinforce the pipe while providing excellent stability to the saddle.

Clamp Saddles for Service connections shall be of fastened strap type with threaded outlet for service connection.

The service connection threading sizes shall be conforming to IS: 554

Clamp saddles shall be suitable for DI pipes of nominal size 3" (NB 80) to 12" (NB 300) with nominal service connection size from ½ " (NB 15), ¾ " (NB 20),1" (NB 25),1 ¼" (NB 32), 1 ½" (NB 40) and 2" (NB 50).

The straps shall be elastomer coated (insulated) type for firm grip on pipe as well as to protect the coating on the pipe and to insulate the un –identical metals. The saddles shall be single strap type up to pipe size of NB 600 and service outlet of ½", ¾", and 1".

The saddles shall be double strap type for pipe sizes above NB 600 or when the service outlet is 1 ¼",1 ½" or 2".

Fasteners shall be of thread nut-bolt-washer type. Nut-bolts of size ½" (M12) shall be used for saddles of size up to 4" (NB 100) and Nut-bolts of Size 5/8" (M 16) shall be used for saddles of size 6" (NB 150) and above.

The sealing between the saddle and mains shall be obtained by using a profiled elastomer seal matching to the curvature of the pipe.

The seal shall be of elastomer type, suitable for all potable water applications.

The Material of construction of the body, straps, fasteners etc. shall be of a non-corrosive material such as engineering plastic (PE / PP) or stainless steel or a combination of both or DI with Resicoatepoxy.

The design of the saddle body should be such that, the service connection outlet metal insert shallproject out towards pipe side and align with the hole drilled on the pipe to ensure positive locking against rocking or creeping on the pipe, as might be caused by vibration, pressure or excessive external loading.

The clamp saddles shall be suitable for maximum working pressures up to 10 bars

Material and Design Specifications

Saddle Body: Non corrosive Engineering Plastic body moulded with Stainless steel threaded metal insert for tapping outlet. Also, the stirrup metal plate shall be duly embedded in the plastic body, except at the place of nut-bolt lugs. Threading size and dimensions shall conform to IS: 554. The body shall have retaining cavity housing for internal and external retention of the elastomeric seal. Sealing shall be achieved by pressure exerted by the body while fastening the saddle straps & body on the pipe.

Government of Nepal Ministry of Water Supply and Sewerage Development Department of Water Supply and Sewerage Management Project Office Butwal, Rupandehi

Office Chief

Saddle Strap: Saddle straps shall be made of plastic with or without metal reinforcement depending on size and injection moulded to prevent galvanic corrosion over the long service life. In case of metal reinforcement, the metal should not come in direct contact with pipe.

Strap Insulation: In case of plastic strap, insulation is NOT required.

Saddle Seal: It shall be virgin rubber SBR Grade 30 / NBR (NSF 61 approved). It shall be of type pressure activated hydro-mechanical design. It shall be contoured gasket to provide a positive initial seal which increases with increase in the line pressure. Gasket shall be gridded mat, with tapered ends, with the outlet section having 'o' ring contacting the saddle body multiple o-rings contacting the pipe, preferably with a Stainless steel reinforcing ring insert moulded to prevent expansion under pressure.

Nut-Bolts –washer: Stainless Steel Type 304, NC Rolled thread, Tightening torque for ½" (M12) nut –bolt: 14-15 Kg.m and for 5/8" (M16)nut-bolt : 21-23 Kg.m

3.3.2.8.1.6 Electrofusion Fittings For Polyethylene Distribution Mains

General

All the electrofusion fittings included in this document should be designed for use in water distribution systems and be manufactured/supplied by manufacturers having ISO 9001certification for their quality systems. The products should comply with the following specific requirements.

1. The products shall comply with the requirements of BS EN 12201-3: 2003, BS EN 1555-3 or ISO 8085-3.
2. All the fittings shall be of SDR 11 rating.
3. The product group used for drinking water applications should have undergone type test by WRc-NSF, U.K according to BS 6920 in any of their Certified Laboratories and certificate of Compliance to be produced for the following parameters:
    a. Odour & Flavour of Water
    b. Appearance of Water
    c. Growth of Micro Organism
    d. Extraction of substances that may be of concern to Public Health (Cyto Toxicity)
    e. Extraction of Metals
4. All the products shall be manufactured by injection moulding using virgin compounded PE100 polymer having a melt flow rate between 0.5 – 1.1 grams/10 minutes and shall be compatible for fusing on PE 100 distribution mains manufactured according to the relevant national or international standards. The polymer used should comply with the requirements of BS 3412 and/or BS EN 12201-1.
5. All the electrofusion products should be individually packed so that they can be used instantaneously at site without additional cleaning process. The protective packing should be transparent to allow easy identification of the fittings without opening the bags.
7. The electrofusion products should be with only a single heating coil to fully electro fuse the fitting to the adjoining pipe or pipe component as applicable. The heating coils shall be terminated at terminal pins of 4.0 or 4.7 millimeter diameter, protected with terminal shrouds. Each terminal shroud should be additionally protected with polyethylene shroud caps.
8. No heating element shall be exposed and all coils are to be integral part of the body of the fitting. The insertion of the heating element in the fitting should be part of the injection moulding process and coils inserted after the injection moulding process or attached to the body of the fitting as a separate embedded pad etc. are strictly not acceptable.
9. The brand name, size, raw material grade, SDR rating and batch identification are to be embedded as part of the injection moulding process. Each fitting should also be supplied with a barcode sticker for fusion parameters attached to the body for setting the fusion parameters on an automatic fusion control box. The barcode sticker should also include the fusion and cooling time applicable for the fitting for the manual setting of a manual fusion control box.
10. The fittings should be V-regulated type designed to fuse at a fusion voltage of 40 volts AC.
11. The heating elements should be designed for fusion at any ambient temperatures between -5 to +40 degree centigrade at a constant fusion time i.e. without any compensation of fusion time for different ambient temperatures.

12. A limited path style fusion indicator acting for each fusion zone as visual recognition of completed fusion cycle should be incorporated into the body of each fitting near the terminals. The fusion indicators should not allow the escape of the molten polymer through them during or after the fusion process.

13. All the sockets in the electrofusion fittings should include a method of tapping controlling the pipe penetration (pipe positioner/stopper).

Flanged PE Pipe / Stub Ends

HDPE Stub ends shall be square ended with extra spigot length for Electro fusion coupler jointing, conforming to ISO: 8085 / pr EN 1555-3 / BS EN 12201 specifications. Stub ends will be made of PE 100 material and will be welded on the pipe by Electrofusion jointing only. Stub ends should smooth outer body surface for easy movement of slip on flanges. Flange will be of slip on flange type as described below.

Slip-on Flanges

Slip-on flanges shall be metallic flanges (MS) covered by epoxy coating or plastic powder coating. Slip-on flanges shall be conforming to standard meeting relevant flanges of valves, pipes etc. Nominal pressure rating of flanges will be PN10. Thickness & Internal diameter of the flanges should be as per relevant BS (10 Table D)/ ISO/BSEN standard. Outer diameter and PCD of the flanges should be made as per the other companion flanges of other side to connect the metal pipes / valves etc.

Jointing of PE Pipes shall be made by qualified/certified welders only. Qualification and training of the welders for electrofusion is certified and carried out by the fittings supplier.

All specials/ fittings such as Valves, Flange adopters, Cast Iron (CI)/Mild Steel (MS) specials, Galvanized Iron (GI) pipes and GI specials, Brass Tap etc., will be supplied by the Contractor. Contractor shall install these specials/fittings as per the standards specifications and as per the instructions of the Engineer.

The PE pipes shall be laid in accordance with the latest IS 7634 Part- 1 and 2 and BS EN 12201-3.

After laying and jointing of the PE pipes, after partial refill and before final refill a underground Warning Tapes as per clause 3.3.4.10shall be laid above the crown of the pipe as per the standards and as per the instructions of the Engineer.

GI (light duty)/concrete (Non Pressure) casing pipe shall be provided for HDPE pipe for the particular section line plus required bearing where the alignment of pipe line crossing major roads, natural/side/cross drains, as instructed by the Engineer.

Layer of concrete of required grade shall be provided over the particular section the pipe line where contractor is not able to achieve the specified depth of excavation due to natural hard strata as instructed by engineer in charge.

Contractor has to submit detailed as built drawing of work done in latest Auto Cad version, showing the details of pipe line, specials/fittings, valves and joints in four hard copies and one soft copy.

Field Hydraulic Test

The Sectional Hydraulic Test shall be carried out after the pipeline section to be tested has been laid jointed and backfilled to a depth sufficient to prevent floatation, but leaving the joints exposed which are to be tested. The sections to be tested shall have be to the approval of the Engineer shall be according to clause 3.3.3.6.

3.3.2.8.1.7 Electrofusion Tapping Saddle for House Service Connection

All the electrofusion fittings included in this document should be designed for use in water distribution systems and be manufactured/supplied by manufacturers having ISO 9001certification for their quality systems. They should have supplied to government water boards for their water supply projects. The products should comply with the following specific requirements.

1. The products shall comply with the requirements of BS EN 12201-3: 2003, BS EN 1555-3 or ISO 8085-3.
2. All the fittings shall be of SDR 11 rating.
3. The EF Tapping Saddle used for drinking water applications should have undergone type test by WRc- NSF, U.K according to BS 6920 in any of their Certified Laboratories and certificate of Compliance to be produced for the following parameters::
    a. Odour & Flavour of Water
    b. Appearance of Water
    c. Growth of Micro Organism
    d. Extraction of substances that may be of concern to Public Health (Cyto Toxicity)
    e. Extraction of Metals

4. All the EF Tapping Saddle shall be manufactured by injection moulding using virgin compounded PE 100 polymer having a melt flow rate between 0.5 – 1.1 grams/10 minutes and shall be compatible for fusing on PE 100 distribution mains manufactured according to the relevant national or international standards. The polymer used should comply with the requirements of BS 3412 and/or BS EN 12201-1.

5. The Electro fusion Tapping Saddle intended for water distribution applications shall be coloured Black.

6 All the electro fusion Tapping Saddle should be individually packed so that they can be used instantaneously at site without additional cleaning process. The protective packing should be transparent to allow easy identification of the fittings without opening the bags.

7. The electro fusion Tapping saddle should be with only a single heating coil to fully electro fuse the fitting to the adjoining pipe or pipe component as applicable. The heating coils shall be terminated at terminal pins of 4.0 or 4.7 millimeter diameter, protected with terminal shrouds. Each terminal shroud should be additionally protected with polyethylene shroud caps.

8. No heating element shall be exposed and all coils are to be integral part of the body of the fitting. The insertion of the heating element in the fitting should be part of the injection moulding process and coils inserted after the injection moulding process or attached to the body of the fitting as a separate embedded pad etc. are strictly not acceptable.

9. The pipe fixation shall be achieved by external clamping devices and integral fixation devices are not acceptable.

10. The brand name, size, raw material grade, SDR rating and batch identification are to be embedded as part of the injection moulding process. Each fitting should also be supplied with a barcode sticker for fusion parameters attached to the body for setting the fusion parameters on an automatic fusion control box. The barcode sticker should also include the fusion and cooling time applicable for the fitting for the manual setting of a manual fusion control box.

11. The fittings should be V-regulated type designed to fuse at a fusion voltage of 40 volts AC.

12. The heating elements should be designed for fusion at any ambient temperatures between -5to + 40 degree centigrade at a constant fusion time i.e. without any compensation of fusion time for different ambient temperatures.

13. A limited path style fusion indicator acting for each fusion zone as visual recognition of completed fusion cycle should be incorporated into the body of each fitting near the terminals. The fusion indicators should not allow the escape of the molten polymer through them during or after the fusion process.

14. All the sockets in the electro fusion fittings should include a method of tapping controlling the pipe penetration (pipe positioner /stopper).

15. The Electro fusion Tapping saddle should be the top loading type which are to be clamped on the mains for fusion using the custom made top loading clamps exerting 1500N (150 kilograms approximately) top load. Saddles with wrap around clamps shall also be acceptable of PE 100material and black in colour.

16. The tapping EF Tapping Saddle should be supplied with suitable adaptors for proper positioning of the top loading clamp into the saddle.

17. The torque required to operate the cutter after fusion on the PE mains should not exceed 45N-m.

18. The common cutter provided by the manufacturer should be designed in such a way that the cut coupon is not allowed to fall into the pipeline and is retained inside the body of the cutter providing a positive sealing of the hole in the cutter head for pressure testing.

19. The EF tapping Saddle will have female threaded outlet to connect Compression Metal insert Male thread adaptor fitting or metal ferrule for further extension of connection.

20. The threaded outlet should be from sizes ½" to 2" BSP to suit the required House service connections.

21. The outlets should be reinforced with female threaded metal inserts of stainless steel -SS 304.The tapping on the PE mains shall be achieved by a custom built metal cutter supplied by the manufacturer.

3.3.2.9 Specification for High Tensile Carbon Steel Seamless Pipe

Government of Nepal Ministry of Water Supply and Sewerage Management Department of Water Supply and Sewerage Management Office Butwal, Rupandehi

Office Chief

1. Composition:

ASTM A53 pipe covers Seamless and Welded, Black and Hot-Dipped Galvanized nominal (average) wall pipe for coiling, bending, flanging and other special purposes and is suitable for welding. Continuous-Welded pipe is not intended for flanging. Purpose for which pipe is intended should be stated on order.
Type S (seamless)

	Grade 1	Grade 2
Carbon max. %	0.25	0.30
Manganese %	0.95	1.2
Phosphorous, max. %	0.05	0.05
Sulfur, max. %	0.045	0.045
Copper, max.%	0.40	0.40
Nickel, max. %	0.40	0.40
Chromium, max. %	0.40	0.40
Molybdenum, max. %	0.15	0.15
Vanadium, max. %	0.08	0.08

2. **Permissible Variations in Wall Thickness**

The minimum wall thickness at any point shall not be more than 12.5% under the nominal wall thickness specified.

3. **Tensile Strength**

	Grade 1	Grade 2
Tensile Strength, min., kgf/mm²	38.5	42
Yield Strength, min., kgf/mm²	21	24.5

4. **Hydrostatic inspection test**

Hydrostatic inspection test pressures for plain end and threaded and coupled pipe are specified. Hydrostatic pressure shall be maintained for not less than 5 seconds for all sizes of seamless pipe.
Each length of pipe shall be subjected to hydrostatic test without leakage. Test pressure for pipe in sizes 457.2 mm and smaller shall be held for not less than 5 seconds. The pipe shall be struck while under pressure with 1-kg hammer or its equivalent near the weld at the both the ends of pipe.
The test pressure shall be calculated by the following equation:

$$P = 200\frac{St}{D}$$

Where,
P = hydrostatic test pressure in kgf/cm²

S = fibre stress in kgf/cm² (75-80% of specified minimum yield strength)
t = specified wall thickness in mm, and
D = specified outside diameter in mm

5. **Length of pipe**

The pipe shall be supplied in standard lengths of 5 to 7 meters each. The both ends of each pipe shall be plain.

6. **Standards**

All materials, workmanship and components shall, where applicable and unless otherwise stated in the Contract, comply with either:

a) Indian Standards IS 6286 (1971 reaffirmed 2003): Seamless and welded steel pipes for sub-zero temperature service [MTD 19: Steel Tubes, Pipe and fittings] published by Bureau of Indian Standards, Manak Bhawan, New Delhi, India

The acceptance of a tender based upon a Standard or Code proposed by the Supplier shall only signify the Purchaser's general approval to the use of such Standard or Codes and shall not make the Purchaser liable to accept a Standard or Code subsequently found to be inferior to that specified in the corresponding Standard or Code of Practice.

Office Chief

7. **Test Certificate**

Certificates in triplicate shall be provided by the Supplier for pipe and fittings supplied giving the process of manufacture and the results of the specified tests.
Similar certificates in triplicate shall be provided by the Supplier in respect of materials to be used in the manufacture of the pipes and fittings giving the process of manufacture, chemical analysis (where relevant) and the results of the specified tests.
The material shall be suitably marked to enable them to be identified from references on the certificates.

8. **Independent Tests**

The purchaser reserves the right to carry out any independent or local tests he may deem fit on the completed pipes and fittings or on any material provided under the Contract at any stage during the Contract including the guarantee period. In addition to any relevant clause in the General Conditions of Contract of Contract any materials, workmanship or completed pipes and fittings which are shown by such independent tests not to be in accordance with the Specification shall be rejected notwithstanding any previous certificate which may have been provided

9. **Rejected Goods**

Any materials delivered to Site, which are rejected by the Purchaser shall immediately be removed from the Site by, and at the expense of, the Supplier.
Any pipes and fittings, which have been rejected, shall be marked in a distinctive manner, which shall preclude any possibility of their use for the purpose for which they were supplied. Such pipes and fittings may be submitted for re-test following the correction of any defects, where such correction is permitted by the Purchaser.

10. **Tests Bend**

2" & under Std. & XHY 90° to 12 times nom. diameter. Close coiling 180° to 8 times nom. Dia

11. **Flattening**

over 2" nom. XHY & lighter. CW 90° to 75% ODv

Government of Nepal
Ministry of Infrastructure Development
Department of Water Supply and Sewerage Management Office
Water Supply and Sewerage Management Office
Butwal, Rupandehi

Office Chief

12. Wall tolerance

Min. wall shall not be more than 12.5% under nominal wall

DIMENSION AND WEIGHT

Nominal Pipe Size mm/inch	OD mm	SCHEDULE WALL THICKNESS (mm) / WEIGHT (kg/m)													
		Sch 5	Sch 10	Sch 20	Sch 30	STD	Sch 40	XS	Sch 60	Sch 80	Sch 100	Sch 120	Sch 140	Sch 160	XXS
6	10.3	-	1.24	-	-	1.73	1.73	2.41	-	2.41	-	-	-	-	-
1/8		-	0.28	-	-	0.37	0.37	0.47	-	0.47	-	-	-	-	-
8	13.7	-	1.65	-	-	2.24	2.24	3.02	-	3.02	-	-	-	-	-
1/4		-	0.49	-	-	0.63	0.63	0.80	-	0.80	-	-	-	-	-
10	17.1	-	1.65	-	-	2.31	2.31	3.20	-	3.20	-	-	-	-	-
3/8		-	0.63	-	-	0.84	0.84	1.10	-	1.10	-	-	-	-	-
15	21.3	1.65	2.11	-	-	2.77	2.77	3.73	-	3.73	-	-	-	4.78	7.47
1/2		0.80	1.00	-	-	1.27	1.27	1.62	-	1.62	-	-	-	1.95	2.55
20	26.7	1.65	2.11	-	-	2.87	2.87	3.91	-	3.91	-	-	-	5.56	7.82
3/4		1.03	1.28	-	-	1.69	1.69	2.20	-	2.20	-	-	-	2.90	3.64
25	33.4	1.65	2.77	-	-	3.38	3.38	4.55	-	4.55	-	-	-	6.35	9.09
1		1.29	2.09	-	-	2.50	2.50	3.24	-	3.24	-	-	-	4.24	5.45
32	42.2	1.65	2.77	-	-	2.58	3.56	4.85	-	4.85	-	-	-	6.35	9.70
1 1/4		1.65	2.69	-	-	3.39	3.39	4.47	-	4.47	-	-	-	5.61	7.77
40	48.3	1.65	2.77	-	-	3.68	3.68	5.08	-	5.08	-	-	-	7.14	10.15
1 1/2		1.90	3.11	-	-	4.05	4.05	5.41	-	5.41	-	-	-	7.25	9.55
50	60.3	1.65	2.77	-	-	3.91	3.91	5.54	-	5.54	-	-	-	8.74	11.07
2		2.39	3.93	-	-	5.44	5.44	7.48	-	7.48	-	-	-	11.11	13.44
65	73.0	2.11	3.05	-	-	5.16	5.16	7.01	-	7.01	-	-	-	9.53	14.02
2 1/2		3.69	5.26	-	-	8.63	8.63	11.41	-	11.41	-	-	-	14.92	20.39
80	88.9	2.11	3.05	-	-	5.49	5.49	7.62	-	7.62	-	-	-	11.13	15.24
3		4.52	6.46	-	-	11.29	11.29	15.27	-	15.27	-	-	-	21.35	27.68
90	101.6	2.11	3.05	-	-	5.74	5.74	8.08	-	8.08	-	-	-	-	-
3 1/2		5.18	7.41	-	-	13.57	13.57	18.64	-	18.64	-	-	-	-	-
100	114.3	2.11	3.05	-	-	6.02	6.02	8.56	-	8.56	-	11.13	-	13.49	17.12
4		5.84	8.37	-	-	16.08	16.08	22.32	-	22.32	-	28.32	-	33.54	41.03
125	141.3	2.77	3.40	-	-	6.55	6.55	9.53	-	9.53	-	12.70	-	15.88	19.05
5		9.46	11.56	-	-	21.77	21.77	30.97	-	30.97	-	40.28	-	49.12	57.43
150	168.30	2.77	3.40	-	-	7.11	7.11	10.97	-	10.97	-	14.27	-	18.26	21.95
6		11.31	13.83	-	-	28.26	28.26	42.56	-	42.56	-	54.21	-	67.57	79.22
200	219.10	-	-	6.35	7.04	8.18	8.18	12.70	10.31	12.70	15.09	18.26	20.62	23.01	22.23
8		-	-	33.32	36.82	42.55	42.55	64.64	53.09	64.64	75.92	90.44	100.93	111.27	107.93
250	273.00	3.40	4.19	6.35	7.80	9.27	9.27	12.70	12.70	15.09	18.26	21.44	25.40	28.58	25.40
10		22.61	27.78	41.76	51.01	60.29	60.29	81.53	81.53	95.98	114.71	133.01	155.10	172.27	155.10
300	323.80	-	-	-	8.38	9.53	10.31	12.70	14.27	17.48	21.44	25.40	28.58	33.32	25.40
12		-	-	-	65.19	73.86	79.71	97.44	108.93	132.05	159.87	186.92	208.08	238.69	186.92
350	355.60	-	-	-	9.53	9.53	11.13	12.70	15.09	19.05	23.83	27.79	31.75	35.71	-
14		-	-	-	81.33	81.33	94.55	107.40	126.72	158.11	194.98	224.66	253.58	281.72	-
400	406.40	-	-	-	9.53	9.53	12.70	12.70	16.66	21.44	-	-	-	-	-
16		-	-	-	93.27	93.27	123.31	123.31	160.12	203.54	-	-	-	-	-
450	457.00	-	-	9.53	11.33	9.53	14.27	12.70	19.05	23.83	-	-	-	-	-
18		-	-	105.17	122.38	105.17	155.81	139.16	205.75	254.57	-	-	-	-	-
500	508.00	-	-	9.53	12.70	9.53	15.09	12.70	20.62	26.19	-	-	-	-	-
20		-	-	117.15	155.13	117.15	183.43	155.13	247.84	311.19	-	-	-	-	-

13. Marking

The pipes should be marked with the following particulars:

a) Manufacturer's name or trade mark
b) Size
c) Weight per metre
d) Grade
e) Process of manufacture
f) Type of steel
g) Heat treatment
h) Test pressure

The product may also be marked with standard mark.

Government of Nepal
Ministry of Infrastructure Development
Department of Water Supply and Sewerage Management
Water Supply and Sewerage Management Office
Butwal, Rupandehi

Office Chief

3.3.3 Installation of Water Pipelines

This specification covers the transportation to Site, installation and testing of water supply pipe lines, valves, fittings and other specials supplied as per Clause 3.3.2 of this specification.

It also covers the construction of valve chambers, thrust blocks, manholes and other structures required for the operation of the water mains.

3.3.3.1 Interpretations

3.3.3.1.1 Supporting Specifications

The following specifications shall, inter alia, form part of and shall be read in conjunction with this specification:

a) 1.1 General
b) 2.1 Site Clearance
c) 2.2 Earthworks
d) 2.3 Cement Concrete
e) 2.4 Brickworks
f) 2.10 Roads and Parking Areas
f) 3.1 Pipe Trenches
g) 3.2 Pipe Bedding
h) Supply of Material

3.3.3.1.2 Application

This specification contains clauses that are generally applicable to the construction and installation of water supply pipelines and appurtenances, Pipes, Valves and Fittings Installation, Testing and Commissioning.

3.3.3.2 Materials

Ductile Iron, Galvanised Iron and PE pipes, specials, polyethylene sleeving and valves, shall be capable of withstanding the applicable test pressure specified in Clause 3.3.3.6 below. All pipes and fittings shall be supplied complete with couplings and jointing material.

Satisfactory temporary end covers shall be provided by the contractor for the protection of threads, flanges, and prepared ends of plain-ended pipes and fittings, and to prevent damage to internal lining during transportation and during handling on Site.

The Contractor shall supply a mastic putty, and a wrapping tape, to protect all buried nuts and bolts from corrosion

The Contractor shall supply protective wrapping tape to be used to protect the pipe and joints from corrosion in the locations indicated on the Drawings. The primer used before application shall consist of xylene and bituminous material and shall be supplied by the tape manufacturer. The tape shall be black in color and consist of a PVC backing bonded to a self adhesive bituminous rubber compound with a total thickness of 1.65mm. The PVC backing shall be extruded (non- calendered) and have an average thickness of 0.75mm. The tape shall be supplied on a high quality overwidth silicone release paper, extending some 12.5mm wider than the tape.

Pipeline materials shall be so transported, stored, and handled that pipes are not overstressed at any time and fittings are not damaged in any way. Pipes damaged or cracked in any way shall be removed from the Site and replaced at the Contractor's expense.

Materials for manhole covers and surface boxes shall be as specified in Clause 3.3.3.4.8.

3.3.3.3 Construction Equipment

Any vehicle on which pipes are transported shall have a body of such length that the pipes do not overhang. Large pipes shall be placed on cradles and the loads properly secured during transit. The pipes shall be handled in accordance with the manufacturer's recommendations.

The equipment and rigging equipment used by the Contractor for the handling and placing of pipes shall be in accordance with the manufacturer's recommendations and shall be such that no pipe is overstressed during any operation covered by the specification.

The Contractor shall provide all tools and equipment used for the cutting, jointing and laying of pipes, fittings and valves.

The Contractor may use any acceptable device, including one incorporating a laser beam, to control the alignment and laying of the pipeline subject to the approval of the Engineer.

The Contractor shall provide all equipment and tools required for installation of polyethylene sheeting, mastic putty and all types of wrapping tape.

The Contractor shall provide all equipment, materials, tools and fittings required for the cleaning and swabbing of the pipeline.

The Contractor shall provide all the equipment, materials, tools, and fittings required for the performance of the tests given in Sub-section 3.3.7 below. Test gauges shall be of approved manufacturer having dials at least 200 mm diameter, graduated such that the test pressure is at least 75% of the gauge reading. If necessary different gauges shall be supplied for different pipeline sections. Two gauges of each type shall be provided for the sole use of the Engineer and shall remain in the Engineer's possession for the duration of the Contract.

All gauges shall be dead weight tested and proved at the commencement of use and at regular intervals thereafter as required by the Engineer.

All equipment and methods shall be subject to the approval by the Engineer.

3.3.3.4 Construction and Workmanship for DI Pipes

3.3.3.4.1 Handling of Pipes and Fittings

Coated pipes shall be transported on trucks or trailers fitted with approved padded timber cradles shaped to fit the curvature of the pipes and of adequate dimensions so as to prevent any damage to the pipe coating. Successive tiers of coated pipes shall be separated by similar suitable shaped timber cradles when more than one tier of pipes is being transported. Pillows shall be provided between securing chains or lashings when loads are being transported.

Particular care shall be taken during unloading, loading, handling and transportation to avoid distortion, flattening, denting, scoring or any other damage to the pipes, fittings and any damage to the external or internal coating or lining of the pipes, fittings etc. Under no circumstances shall pipes be dropped, be allowed to strike on another, be rolled freely or dragged along the ground.

Loading, unloading and handling shall be carried out using special hooks, well padded, with a curved plate to fit the curvature of the pipes or webbing slings not less than 30 cm wide or other means approved by the Engineer. Steadying ropes shall be employed. The positions of lifting slings shall ensure that stresses and tendency towards deformation in the pipes are kept at a minimum. Pipe handling equipment shall be maintained in good repair and any equipment which in the opinion of the Engineer may cause damage to the pipes shall be discarded.

End covers and protection shall not be removed until incorporation of the pipes and fittings into the Works.

Care shall be taken during loading, transporting, and unloading to prevent damage to the pipes, fittings or coatings. When loading pipes in the stockyard the Contractor will be responsible for any damage to pipes and fittings which shall be noted and reported to the Engineer. After unloading all pipes or fittings will be examined and any defects or damage shall be noted and reported to the Engineer. Any damage shall be repaired in a manner recommended by the Manufacturer with the approval of the Engineer. Any pipe not considered by the Engineer to be of an acceptable quality after repair will not be accepted and the Contractor will not be paid for the supply of the item.

When materials are temporarily stored at the edge of the wayleave they shall be stored clear of the ground and positioned to avoid damage by passing traffic in a manner approved by the Engineer.

3.3.3.4.2 Laying

To ensure that his supervisors and operators are familiar with the manufacturer's instructions/pipeline construction manuals for the laying and jointing of pipes and that these instructions are strictly adhered to, the Contractor shall employ the manufacturer to demonstrate laying and jointing. The demonstration shall also include the cutting of pipes and the repair of damaged pipes.

Pipe laying shall not commence until the bottom of the trench and the pipe bed have been approved by the Engineer.

The trench bottom shall be prepared as specified in Clause 3.1.5.8. Trenches shall be kept dry to allow proper and safe bedding, laying, jointing of pipes and construction of the selected fill blanket over the pipes.

The DI pipeline shall be sheathed in polythene sleeve for protection, installed in accordance with AWWA C105. The use of the type of protection shall be based on ground conditions in accordance with the following table or as directed. The Contractor shall measure soil resistivity and pH at 100 m intervals.

The protected pipeline shall be laid and bedded to even grades and to levels and alignments shown on the drawings or as directed. It shall be laid centrally in the trench and with the manufacturer's class and quality identification marks visible from the top of the trench, if possible. Control of laying and bedding shall be by means of boning rods and sight rails or an acceptable laser beam device. Sight rails shall be painted black and white and shall be fixed securely and accurately.

Pipes shall be brought to the correct alignment and inclination, concentric with the pipes already laid. Adjustments to line and grade should be made by scraping away or adding adequately compacted foundation material under the pipe and not using wedges and blocks or beating on the pipe.

Pipes shall be handled in manner which eliminates any possibility of high impact or point loading, taking care to protect the joint elements.

Every reasonable precaution shall be taken to prevent the entry of foreign matter and water into the pipeline. At the close of each day's work or at any time when work is suspended for a significant period, the last laid pipe shall be plugged, capped, or otherwise tightly closed until laying is recommenced.

Where so required, the cover or the alignment of a pipeline may change gradually by deflection at pipe joints, but this deflection shall not be greater than half the deflection permitted by the manufacturer of the pipe.

The minimum clearance between the outside of a pipeline being laid and the outside of any other pipe that it crosses shall be 150 mm. Where this requirement conflicts with the requirements for cover over the pipeline the Contractor shall ask the Engineer for written instructions and shall carry out the work in accordance with those instructions.

3.3.3.4.3 Jointing

All pipelines shall be jointed in accordance with the manufacturer's instructions and to the approval of the Engineer.

Until required for incorporation in a joint, each rubber ring or gasket shall be stored in the dark, free from the deleterious effects of heat or cold, and kept flat so as to prevent any part of the rubber being in tension.

Spigots and sockets of pipes being jointed shall be thoroughly cleaned by brushing and wiping immediately before being jointed. All rubber rings and seals shall be carefully inspected after being placed in position and before the joint is closed, to ensure that they have not suffered any cuts, tears, or other damage, and are not in any way defective.

All pipes with flexible joints shall be accurately marked prior to laying to ensure that the correct gap is left in the joint.

For push-fit and bolted gland joints only lubricants recommended by the manufacturer shall be used in connection with rubber rings and these lubricants shall not contain any constituent soluble in water conveyed in the pipe. They shall be suitable for the climatic conditions at the Site and shall contain an approved bactericide.

For bolted gland joints the joints ring shall be pushed into place by the gland ring using only hand pressure, fixing nuts and bolts should then be fitted and first tightened to finger pressure. Thereafter tightening shall be in the sequence proposed by the manufacturer and to the torque recommended.

In the jointing of pipes with flanges, special care shall be taken to align, grade, and level the pipes, specials, and valves to avoid straining of the flanges. All bitumen and paint shall be removed from the mating face of each flange immediately before jointing. Bolts shall be tightened up evenly in opposite pairs to ensure uniform bearing, the final tightening shall be to the torque specified by the manufacturer.

For flanged joints the gasket shall be fitted smoothly to the flange and the joint made by tightening the nuts to finger pressure first. Thereafter the final tightening of the nuts shall be made by gradually and evenly tightening bolts in diametrically opposite positions using only standard spanners of a type approved by the Engineer.

Graphite grease shall be applied to the threads of bolts before joints are made. All joints containing nuts and bolts which are buried shall be protected with anticorrosive mastic and wrapping tape, applied in accordance with the manufacturer's recommendations.

Care shall be taken to avoid damage to the internal surface of the pipes during assembly of the pipeline.

Once joints are made they shall be protected to a level appropriate for the pipe by: polyethylene sleeving, muffs, or with molding putty and tape wrapping.

3.3.3.4.4 Setting of Valves, Specials, and Fittings

Unless otherwise shown on the drawings, or directed by the Engineer, gate valves shall be set upright and butterfly valves shall be set with the main shafts horizontal. All valves, specials, and fittings shall be located in the exact positions shown on the drawings or otherwise directed. All bolts and flanges which are to be buried shall be covered with a corrosion inhibiting mastic putty or molding compound to produce smooth contours, the prepared fitting shall then be wrapped in protective tape.

3.3.3.4.5 Cutting of Pipes

Pipes shall be cut by a method which provides a clean square cut of the pipe and of the lining, without damage to pipe or lining. All cut or trimmed ends and the parts of any pipe on which the coating may have suffered damage shall be re- coated as specified before the pipes are laid.

The external area at cut spigot ends of ductile iron pipes shall be ground smooth for a distance of at least 125 mm, and then chamfered or otherwise made suitable for jointing as recommended by the pipe manufacturer.

3.3.3.4.6 Anchor/Thrust Blocks and Pedestals

At tees, bends, terminal valves, end caps, and where otherwise directed, anchor/thrust blocks shall be constructed to dimensions ordered or shown on the drawings. Unless otherwise indicated on the drawings, anchor/thrust blocks and pedestals shall be constructed of Grade C20 or M20 concrete. The concrete shall be well punned around the pipe, if in trenches, against the undisturbed faces and bottom of the trench. Backfilling behind or under thrust faces will not be permitted. Excess excavation shall be replaced with the prescribed mix concrete given above at the Contractor's expense.

Care shall be taken to leave all joints accessible. No anchor/thrust block and pedestals shall be concreted before the approval of the Engineer has been obtained.

3.3.3.4.7 Valve Chambers

All washout valves, pressure reducing valves, and air valves in pipelines shall be housed in a chamber as shown on the drawings or directed by the Engineer.

3.3.3.4.8 Covers for Chambers

All covers and frames shall be manufactured, from cast grey or ductile iron, and be coated to the approval of the Engineer.

For non vehicular area like septic tank, soak pit and at other structures shown in drawing, Heavy Duty (HD-20) Manhole Cover with square frame as per Table 1 of IS 1726 shall be used. And for chambers in traffic area and other structure shown in drawing Extra Heavy Duty (EHD-35) Manhole with Square frame confirming to IS 1726 (Table 1) shall be used.

All covers shall be fitted to the frames and tested at the manufacturer's works and covers and frames shall be similarly numbered in a legible and permanent manner in a position which will not be visible when fitted in place, and shall be of such construction as to minimize the ingress of sand.

The Contractor shall ensure that the covers are fitted to the appropriately numbered frames after the frames have been fitted.

The name of the Employer, year of manufacture, and any additional markings shown on the drawings shall be embossed in all covers.

3.3.3.4.9 Interface Points

i. General

Where the interface is a pipe flange, the Contractor may be instructed by the Engineer either to install a blank flange, backfill and mark the interface, or to expose and connect to a flange installed by another contractor and backfill on completion.

ii. Installation of Flanged Connection Point

The connection point shall be provided at the location specified. The flange shall be installed so that it is vertically plumb and its face is perpendicular to the axis of the pipeline. The flange shall be covered by a PN 16 blank flange, the flange shall be installed in the specified manner. The flange shall be backfilled and the location marked with a marker post.

iii. Connection to Flanged Connection Point

The connection point shall be at the location specified and indicated on Site by a temporary marker post. The Contractor shall excavate to expose the flange, remove and dispose of the blank flange and water contained in the pipe and make the flange joint in accordance with the Specification, including the provision of all jointing materials.

3.3.3.4.10 Internal Pipe Cleaning

Pipelines of 750 mm diameter and larger shall be manually cleaned internally of all debris, stones and sand prior to testing.

All pipelines less than DN 750 shall be cleaned by the passing through of a foam swab before the hydraulic test on completion. Swabbing shall be carried out successively between adjacent temporary swabbing points installed by the contractor.

The foam swab shall comply with the following:

Size:

Main up to DN 300: swab diameter = pipe diameter + 25%

Main over to DN 300: swab diameter = pipe diameter + 75 mm

Government of Nepal
Ministry of Infrastructure Development
Department of Water Supply and Sewerage Management Office
Water Supply and Sewerage Management Office
Butwal, Rupandehi
Office Chief

Quality:

Hard

Where restrictions in the main do not reduce the diameter of the pipeline to less than two thirds of the swab diameter.

Soft

Where restrictions in the main are in excess of the above but do not reduce the diameter of the pipeline to less than one half of the swab diameter.

3.3.3.4.11 Disinfection of Potable Water Pipelines

The internal surfaces of all pipelines and pipework including all equipment incorporated in a pipeline or pipework through which water will pass shall be disinfected after they have been cleaned to the satisfaction of the Engineer.

Disinfection shall be effected by filling the pipeline with water heavily dosed with chlorine, and shall be carried out when filling the pipeline with water for carrying out the hydraulic test on completion. Alternative methods may be adopted with the approval of the Engineer.

The level of the chlorine dosing shall be such as to make available 50 mg/l of free chlorine throughout the pipeline.

The water, heavily dosed with chlorine, shall stand in the pipeline for a period of 24 hours or for such longer period as the Engineer shall require and all valves in the system shall be operated at least once during this period.

At the termination of the required period, chlorine residual tests shall be taken at the end of the pipeline farthest from the point of injection and the test shall be repeated if necessary until the residual is not less than 10 mg/l.

The Contractor shall obtain the Engineer's approval to the method to be adopted for disposing of the chlorinated water and the time when such disposal shall take place on completion of disinfection. The Contractor shall neutralize the chlorine by the use of sodium thiosulphate prior to disposal.

3.3.3.5 Tolerances

3.3.3.5.1 General

No deviation will be permitted from the minimum cover specified or as shown on the drawings.

The criteria for the level and gradient to which pressure pipelines shall be laid are as follows:

the cover above the crown of the pipe to ground level shall be as shown on the Drawings. The upward gradient shall be steeper than 1 in 500 with flow, or steeper than 1 in 250 against the flow except where expressly shown in the Drawings.

3.3.3.5.2 Control Points

For the purpose of this specification valves set on the centre line of the pipeline, designated changes in gradient and designated changes in horizontal alignment, shall be regarded as control points and shall be located with a permissible deviation of + 100 mm on the centre line. The same deviation will be permissible laterally except where the Contractor is required to lay the pipeline to a curve or at a designated distance from a boundary, kerb line, or fence line, in which case the permissible deviation shall be + 30 mm.

Unless otherwise directed and subject to a permissible deviation (measured along the centre line) of + 5 m, scour valves shall be located at the lowest points in pipelines and air valves at the highest points.

3.3.3.5.3 Alignment (plan and level)

Unless otherwise directed, the permissible deviation in alignment between control points from a straight line joining the control points, when measured on the top centre of the pipeline, shall be + 100 mm or + 20% of the nominal diameter, whichever is the larger, and the permissible deviation per pipe length shall be + 30 mm. The permissible deviation from the designated level at any point on the invert of the pipeline shall be + 50 mm or + 10% of the nominal diameter of the pipe, whichever is the larger.

Each pipe shall be laid to the required gradient such that the end of the pipe is + 5mm of the required level relative to the other and of the pipe.

3.3.3.5.4 Valve chambers, Manholes, etc.

Valve chambers, manholes, and the like shall be constructed centrally on the control points and, with the exception of tolerances that affect access to bolts, nuts, etc., with a permissible deviation of + 50 mm on all clearance dimensions. The clearance dimension between the outside of each nut and bolt-head and the inside face of the wall of a structure or any other fitting shall generally be not less than 150 mm.

Government of Nepal
Ministry of Infrastructure Development
Department of Water Supply and Sewerage Management
Water Supply and Sewerage Management Office
Butwal, Rupandehi
Office Chief

3.3.3.5.5 Pipe Protective Coatings, etc.

No air must be trapped underneath the wrapping tape. Unsatisfactory pipes shall be cleaned, prepared and rewrapped.

All damage to protective coatings must be repaired. In the following manner;

3.3.3.5.5.1 Bitumen Coating

Damage to bitumen coating will be repaired by preparing and repainting the damaged area in accordance with the pipe manufacturers' instructions.

3.3.3.5.5.2 Polyethylene Sleeving

Minor damage, small holes etc, to polyethylene sleeving may be repaired by sticking adhesive tape over the damaged point. Larger damage shall be repaired by replacing the sleeve or by sticking a large patch of the sleeving material over the damaged area.

3.3.3.5.5.3 Tape Wrapping

Minor damage, small holes etc, to wrapping may be repaired by sticking adhesive tape over the damage after cleaning and preparing the damaged point. Larger damage shall be repaired by cleaning and rewrapping the damaged area.

3.3.3.6 Pressure and Leakage Test

All newly installed pipelines and old pipes for connection to the new system must undergo sectional pressure and leakage testing prior to final acceptance. This memorandum provides recommended standards for pressure and leakage testing ductile iron and HDPE water lines. These recommendations closely follow relevant AWWA Standards and industry specifications. The applicable AWWA Standards are C600 for ductile iron mains and M55 for HDPE.

Simultaneous or separate pressure and leakage tests should be performed. The test duration and pressures for each option are specified in table below. If separate tests are made, the pressure test should be conducted prior to the leakage test.

Pressure and Leakage Test Methods

Procedure	Test Pressure	Duration of Test
Simultaneous Pressure & Leakage Test	150% of working pressure* at the point of test, but not less than 125% of normal working pressure at the highest elevation	2 Hours
Separate Pressure test	150% of working pressure* at the point of test not less than 125% of normal working pressure at highest elevation	1 Hour
Separate Leakage Test	150% of working pressure* of segment tested	2 Hours

Note: working pressure is defined as the maximum anticipated sustained operating pressure. However, in no case shall the test pressure exceed the pressure rating for the pipe, valves, appurtenances, or thrust-restraints.

The purpose of the pressure test is to locate defects in materials or workmanship. Before testing, the pipeline must be backfilled and braced sufficiently to prevent movement under pressure.

If concrete thrust blocks are used, sufficient time must be allowed before testing to ensure that the concrete has cured sufficiently. The test ends also should be restrained to withstand thrusts potentially developed under the test pressures.

A pressure test should be conducted at 150% of the working pressure in the line. The working pressure is defined as the maximum anticipated sustained operating pressure in the line being tested. Care must be taken not to exceed the pressure rating of pipes, valves, fittings, thrust restraints, or other appurtenances. Pressures in the main may exceed the specified test pressure if the water pressure is read from a gauge located at a high point in the main.

Potable water is introduced into the main through a temporary connection line. While filling the new main, air must be expelled from the pipeline by venting through service connections, hydrants, or air-release valves. It is important to completely expel air from each section of the main to be tested. Compressed entrapped air may amplify surges within the main or cause erroneous pressure test result.

After filling the main with water and expelling air, a pump is utilized to increase the water pressure within the line up to the required test pressure and to maintain that pressure for the required duration (see table above). An accurate method for measuring the amount of water pressure within the line must be provided. A key criterion for the pressure test is that the measured water pressure within the main (after reaching the required test pressure) should not vary by more than 5 psi during the duration of the test. While the line is under pressure, the system and all exposed pipe, fittings, valves, hydrants, or joints should be repaired or replaced and the pressure test repeated until satisfactory results are obtained.

The purpose of the leakage test is to establish that the section of main being tested, including all joints, fittings and other appurtenances, will not leak or that leakage is within acceptable limits. If the leakage test is to be performed simultaneously with the pressure test, the system should be allowed to stabilize at the test pressure before conducting the leakage test.

Equipment necessary for conducting the leakage test includes a pump equipped with a make-up reservoir and pressure gauge for measuring water pressure in the main. In addition, there must be an accurate method for measuring the quantity of water pumped into the main being tested. Methods used to measure water volume include a calibrated make- up reservoir, a calibrated positive-displacement pump, or a water meter.

The specified test pressure for the leakage test is the same as for the pressure test (see Table) and the test should be conducted for at least 2 hours in duration. Leakage is defined as the quantity of water that must be supplied into the main in order to maintain the water pressure within 5 psi of the specified test pressure after the pipe has been filled with water and air expelled. No pipe installation will be acceptable if the leakage is greater than that determined by the following formulas:

$$L = (SD\sqrt{P})/71300$$

Where:

L = allowable leakage, in liters per hour

S = length of pipe tested, in meters

D = nominal diameter of the pipe, in millimeters

P = average test pressure during the leakage test, in kg per square centimeter

The above equation is based on a leakage rate of 11.65 gallon per day, per mile, per inch nominal diameter at a pressure of 150 psi.

Leakage less than the quantity specified by the above equation may be considered "allowable leakage" resulting from such factors as trapped air, take-up of restraints, and temperature variations during testing. However, observed leaks should be repaired regardless of leakage measurements through metering equipment.

A swift loss of water pressure in the main could be the result of a break in the line, major valve opening, loose mechanical joint bolts, missing or dislodged gasket, or inadequate thrust block. a slow loss of pressure in excess of allowable limits could be the result of minor problems such as a leaking valve or a corporation stop not completely shut off. In addition, air entrapped in the line can result in an apparent leakage in excess of the allowable limit.

Recommendations for avoiding minor leaks include the following:

- Vent all high points in the line by use of air release valves or corporation stops.
- Check all mechanical joint bolted connections.
- Cure thrust blocks before testing.
- Insure that exposed gasket grooves are properly cleaned before inserting gaskets.
- When inserting pipe into a mechanical joint or gasket joint, insure that the spigot end is squarely cut and beveled properly for the hub.

One approach for determining if the apparent leakage is the result of air trapped in a line is to immediately repeat the leakage test (i.e., continue the test for another two hours) and determine the amount of make-up water required to fill the line a second time. If this amount is significantly less the first filling, the difference in apparent leakage is probably the result of air being present in the line. If no significant difference in make-up water is recorded, a leak is probable.

3.3.3.7 Sectional Allowable Lengths of Installed Pipe for pressure and leakage test

Maximum sectional completion of the laid pipe for the test should not be more than the length mentioned below.

S. No.	Pipe ND (mm)	Maximum allowable stretch (m)
1	350 mm	1500 m
5	150 to 300	2500 m
6	Up to 150	3500 m

Government of Nepal
Ministry of Infrastructure Development
Department of Water Supply and Sewerage Management
Water Supply Project Management Office
Banke, Nepalgunj

Office Chief

3.3.3.8 Field Testing of Valves

When the valves and appurtenances have been completely installed and as soon as operation conditions permit, they shall be given a field test by the Engineer to demonstrate that they have been suitably installed, that they meet all requirements, are in good operating condition and are, in every way, adequate for the service intended.

3.3.4 Supply and Installation of Galvanized steel pipes and fittings

3.3.4.1 General

Galvanized Iron (GI) pipes shall be used for the new pipe network, reinstatement and relocating of existing water distribution system.

3.3.4.2 Material and Standard

The pipes shall be Galvanized mild steel hot finished seamless (HFS) or welded ERW, HRIW or HFW screwed and socketed conforming to IS:1239 (Part-I) 2004 for grade specified in BOQ. If grade of GI pipe it not mentioned in BOQ, it will be undersood that all GI pips shall be of heavy grade. The zinc coating shall be uniform adherent, reasonably smooth and free from imperfections for respective grade as per IS 1239-2004.

All screwed pipes and sockets shall have pipe threads conforming to the requirements of IS:554. Screwed tubes shall have taper threads while the sockets shall have parallel threads.

Where the pipes have to be cut or threaded, the ends shall be carefully filed out so that no obstruction to bore is offered. The ends of the pipe shall then be carefully threaded conforming to the requirements of IS:554 with pipe dies and tapes in such a manner that it will not result in slackness of joints when two pieces of pipes are screwed together. The taps and dies shall be used only for straightening screw threads which have become bent or damaged and shall not be used for turning of the threads as to make them slack, as the later procedure may not result in a water tight joint. The screw threads of the pipes and fittings shall be protected from damage until they are fitted.

3.3.4.3 Dimensions

The dimensions and weights of medium grade GI pipes and sockets and tolerances shall be as prescribed in the relevent standard.

3.3.4.4 Tolerance

3.3.4.4.1 Tolerance in Thickness

3.3.2.10 Tolerance shall be as per relavent code and grade of GI pipes.

3.3.4.4.2 Tolerance in Weight

3.3.2.11 Tolerance shall be as per relavent code and grade of GI pipes.

3.3.4.5 Specials and fittings

The fittings for GI pipes shall be of mild steel tubular or wrought steel fittings conforming to IS:1239 (Part-II). The fittings shall be designated by the respective nominal bores of the pipes for which they are intended.

3.3.4.6 Jointing

The pipes shall be cleaned and cleared of all foreign matter before being laid. While jointing the pipes, the inside of the socket and the screwed end of the pipes shall be oiled and rubbed over with white lead and a few turns of spun yarn wrapped round the screwed end of the pipe. The end shall then be screwed in the socket, tee etc., with the pipe wrench. Care shall be taken that all pipes and fittings are properly jointed so as to make the joints completely water tight and pipes are kept at all times free from dust and dirt during fixing. Burr from the joint shall be removed after screwing. After laying, the open ends of the pipe shall be temporarily plugged to prevent access of water, soil or any other foreign matter.

3.3.4.7 Laying of GI pipes and fittings

3.3.4.7.1 External work

GI pipes if used for external work, shall be laid according to Clause 3.3.3. in case of pipe in trench, the maximum widths of trench shall be according to drawing.

At joints the trench width shall be widened where necessary. The work of excavation and refilling shall be done true to line and gradient in accordance with the Specifications on laying of pipes given in this chapter.

3.3.4.7.2 Polythene Stleeing and Paintings

The pipes shall be painted with two coats of anticorrosive bitumastic paint of approved quality.

Polyethylene sleeving shall be provided in addition two coat of paintings. Polyethylene sleeving shall comply with ISO 8180 and be marked in accordance with AWWA C105.

Site applied sleeving shall be stored under cover, out of direct sunlit, and its exposure to sunlight shall be kept to a minimum. Pipes having a factory applied sleeving must be stored in the same conditions.

3.3.4.7.3 Testing

The pipes and fittings after they are being laid and jointed shall be tested to a hydraulic test pressure of 60 kg/cm2 (600 m). The pipes shall be slowly and carefully charged with water allowing all air to escape and avoiding all shocks or water hammer, which may develop otherwise. The draw off taps and stop cocks shall then be closed and specified hydraulic pressure shall be applied gradually. A calibrated and accurate pressure gauge shall be used for testing the pressure. The test pump having been stopped, the test pressure should be maintained for at least half an hour. The pipes and fittings shall be tested in sections as the work of laying proceeds, having the joints exposed for inspection during the testing. Pipes or fittings which are found defective shall be replaced and joints found leaking shall be redone, without any extra payment.

The water for testing shall be provided by the Contractor. The quality of water should be approved by the Engineer.

3.3.4.8 Other Specials and Fittings Required for GI Pipelines reinstatement

3.3.4.8.1 Stop Valves

Stop valves shall be gunmetal wedge gate valves, rising stem, hand-wheel operated with screwed female ends; conforming to IS: 778 - 1984 Class 1 or equivalent.

3.3.4.8.2 GI Flange

Flanges shall be female threaded to join GI pipe and valves etc and shall be drilled in accordance with BS: 4504 PN 16 or equivalent. The supply shall be complete with nuts, bolts and washers, all adequately tightened.

3.3.5 Technical specifications and particular conditions: PVC-O pipes

3.3.5.1 General

3.3.5.1.1 Ambient Conditions

All pipes, materials, and equipment shall be suitable for storage, installation, use, and operation under temperature, humidity, and water quality conditions prevalent in the project location. The atmospheric temperature range is expected to vary between -10°C and 50°C, and variable humidity levels. Pipes shall maintain mechanical properties under these environmental conditions without significant degradation. PVC-O pipes shall be suitable for underground and above-ground applications, provided they are not directly exposed to sunlight unless appropriately protected.

3.3.5.1.2 Potable Water Certification

All pipes and materials shall be certified for potable water use and must comply with internationally recognized standards such as Nepal Standard NS596:2079, IS0 16422, IS 16647:2017, and the local water quality standards. Certification shall be from recognized regulatory authorities to ensure compliance with drinking water safety standards.

3.3.5.1.3 Toxic Materials and Environmental Safety

All pipes, pipeline components, coatings, and joint materials in contact with potable water shall be non-toxic, non-microbial-supporting, and shall not alter the taste, odor, or clarity of the water. The supplier must provide a non-toxicity certificate issued by an independent regulatory body. The pipes shall be manufactured from materials free of lead, cadmium, mercury, and other harmful substances that could leach into drinking water. The composition of the PVC-O material shall comply with IS 10148, ensuring uniform dispersion of additives.

3.3.5.1.4 Quality Assurance and Third-Party Inspection

- The supplier shall provide a copy from an original issuing authority, confirming compliance with the applicable standards (NS 596:2079 or IS 16647:2017).
- All certificates must be valid and be written in English or Nepali.
- The supplier shall maintain full traceability of raw materials, production batches, and testing records for at least five years.

3.3.5.1.5 Pipes Packing and Protection

- Pipes shall be bundled or packaged to ensure adequate support and protection during transport.
- Packaging shall prevent damage, UV degradation, and ensure safety during ocean shipment.
- Bundles must include clear markings for easy identification during unloading and storage.

3.3.5.1.6 Identification and Marking

Each separate item, crate, or package shall have a permanently attached identification plate or packing list displaying:

- Manufacturer's name
- Description and quantity
- Serial/reference number
- Weight

- Production date and compliance with NS 596:2079 or IS 16647:2017, standards.

Each pipe shall be permanently marked at not less than once in 5m with:

- Manufacturer's name and logo
- Nominal diameter and pressure rating
- Material type (PVC-O 500, C1.4)
- Production date and batch number
- Standard reference number (NS 596:2079, IS 16647:2017)

3.3.5.1.7 Handling

- Care shall be taken to prevent damage during loading, transport, and unloading.
- Pipes shall not be dropped or rolled.
- Damaged materials will be rejected and replaced at the supplier's expense.
- Handling guidelines shall be provided to ensure proper transportation and storage.

3.3.5.1.8 Pre-Shipment Inspection

Before the goods are ready for packing and dispatch after production, the Employer or its representative shall have the right to inspect and/or to test the goods to confirm its compliance with the provisions of the approved QAP /specifications. All in-house technical, production and test data related to the goods that may be conducted on the premises by the manufacturer shall be furnished to the Employer or an inspection agent appointed by the Employer, at no charge to the Employer.

The Contractor shall cover the costs related to the services of the inspection agent, but the selection of the agent shall be the solely the responsibility of the Employer.

The Employer or an agent appointed by the Employer will visit the manufacturing premises of the goods being manufactured and satisfy himself either through the in-house test results provided by the manufacturer; or shall draw samples of the goods readied for delivery and carry out necessary tests on the manufacturing premises to determine that the goods fully comply with the requirements of the contract. Test carried out at the manufacturing premises shall be at no charge to the Employer.

The goods will be packed and shipped only after it has been cleared for shipment by the Employer or an inspection agent appointed by the Employer. The Employer shall notify the Contactor in writing of the identity of the agent, if any, or its representative retained for such purpose.

Should the goods or any part fail to meet the requirements of the specifications, the Contractor shall replace such goods or the part within the time specified for delivery or extension granted. However, under such circumstances the Contractor shall bear the extra costs incurred in connection with additional inspection, failing which the Employer shall be entitled to recover all such costs from any payments due to the Contractor.

The Employer's right to inspect, test and, where necessary, instruct Engineer to reject the goods after delivery to the Employer's stores, shall in no way be limited or waived by reason of goods having previously been inspected, tested and passed by the Employer or its representative prior to the shipment from the country of origin.

Providing always that replacement is possible, the Contractor shall refund to the Employer all amounts paid on account or recovery may be made from the security for performance.

Nothing in this clause, in any way, releases the Contractor from any warranty or other obligations under the Contract. Employer's failure to inspect and accept or reject goods shall not relieve the Contractor from responsibility nor impose liability on Employer, for non-conforming goods.

3.3.5.1.9 Rejected Goods

Any Goods delivered to the Site which have been rejected by the Engineer shall immediately remove from the Site by, the Contractor, free of cost. Replacement of rejected Goods shall be made as soon as possible but in no case exceeding forty-five (45) days from the time of rejection.

Any goods which have been rejected shall be marked in a distinctive manner which shall preclude any possibility of their use for the purpose for which they were supplied. Such goods may be submitted for retest following the correction of any defects, where such correction is permitted by the Engineer.

3.3.5.1.10 Experience of Manufacturer

The Contractor must show at the time of Bidding that the Manufacture whose product he intends to supply has proven experience and capacity in the manufacture of the type of Goods to be supplied under this contract.

The Contractor must name the manufacturer(s) at the time of Bidding from whom he proposes to obtain any material under the contract. As a proof, he should also include a Letter of Consent from the manufacturer(s) stating his acceptance to sell the material to the Contractor on award of the contract. Normally, the material supplied should be the product from the quoted manufacturer(s). However, in situation beyond the control of the Contractor, the Engineer may consent to accept material from other manufacturer; provided he is satisfied, that the new experienced and capable to produce the material and that the product is either equivalent or superior to the product from the previously agreed manufacture. No orders shall be placed with the newly named manufacturer without the written consent of the Engineer.

3.3.5.1.11 Approved Manufacturer's Instructions

The Contractor shall supply manufacturer's instructions in English for the operation and maintenance and where necessary the assembly, of the items supplied. If the translation of the instructions, the quality of accompanying illustrations, or any other element of the instructions are unclear or ambiguous they shall be revised and resubmitted, until approved by the Engineer, all revisions will be at the Contractor's expense.

Office Chief

3.3.5.2 PVC-O Pipes Technical Specifications

3.3.5.2.1 Standards and Compliance

Pipes shall conform to NS 596:2079 or IS 16647:2017or an equivalent standard, with documentation proving compliance. Copy of original certification from certifying authority must be provided.

3.3.5.2.2 Pipe Properties

- Material Class: PVC-O 500 (highest orientation class)
- Design Coefficient (C): 1.4
- Nominal Pressure Classes: PN 12.5, PN 16, PN 20, PN 25
- Available Nominal Diameters (DN): 63 mm to 1200 mm
- Minimum Pipe Length: 5.95 meters (including socket)
- Minimum Required Strength (MRS): 50 MPa
- Burst Pressure (10-hour test): 23.1 bar (PN12.5), 28.9 bar (PN16), 36.7 bar (PN20), 48.1 bar (PN25)
- Resistance to hydrostatic resistance: Shall confirm to NS 596:2079 Clause 9.1
- Ring Stiffness: Shall conform to minimum stiffness requirements as per NS 596:2079
- Color Availability: Standard blue for potable water and purple for reclaimed water

PVC-O CLASS 500 PIPE

Nominal Pressure (bar)			PN12.5		PN16		PN20		PN25	
Nominal Diameter (DN)	Outside Diameter (OD)		Inside Diameter (ID)	Wall Thickness C1.4 (e)	Inside Diameter (ID)	Wall Thickness C1.4 (e)	Inside Diameter (ID)	Wall Thickness C1.4 (e)	Inside Diameter (ID)	Wall Thickness C1.4 (e)
mm	min.	max.	average	min.	average	min.	average	min.	average	min.
	mm	mm	mm	mm	mm	mm	mm	mm	mm	mm
90	90	90.3	84.3	2.84	84.3	2.84	84	2.5	82.2	3.1
110	110	110.4	104	3.47	104	3.47	103.2	3.1	100.8	3.8
125	125	125.4	117.8	3.6	117.8	3.6	117	3.5	115.2	4.3
140	140	140.5	132.4	3.8	132.4	3.8	131.2	3.9	129.2	4.8
160	160	160.5	151.4	4.4	151.4	4.4	150	4.4	147.6	5.5
180	180	180.5	170.1	4.9	170.1	4.9	160	6	164.5	7.6
200	200	200.6	189.2	5.5	189.2	5.5	187.4	5.5	183.3	6.9
225	225	225.7	212.6	6.2	212.6	6.2	210.8	6.2	207.4	7.7
250	250	250.8	236.3	6.9	236.3	6.9	234.2	6.9	229.1	8.6
280	280	280.8	264.6	7.7	264.6	7.7	261.2	9.4	256	11.8
315	315	316	298	8.7	298	8.7	295.2	8.7	288.6	10.8
355	355	356.1	336	9.8	336	9.8	332.4	9.8	327.2	12.2
400	400	401.2	378	11	378	11	374.8	11	369	13.7
450*	450	451.4	427.6	7.9	426	9.9	421.4	12.4	412.3	15.4
500*	500	501.5	474.6	8.8	472.8	11	468.6	13.7	461.2	17.1
630*	630	631.9	597.8	11	595.8	13.8	590.4	17.3	581	21.6
710*	710	712	674.8	12.4	671.4	15.4	665.6	19.2	654.7	24.4
800*	800	802	760.4	14	757.8	17.4	750.4	21.6	733	27.4
900*	900	902.7	855.4	15.7	850.6	19.6	839.5	24.3	824.1	30.9
1000*	1000	1003	950.5	17.5	945.1	21.7	932.8	27	915.6	34.3
1100*	1100	1103.3	1045.5	27.2	1039.6	30.2	1026.1	37	1007.2	46.4
1200*	1200	1203.6	1140.6	21.1	1134.1	26.2	1119.4	32.4	1098.8	41.4

Figure 1 Range and dimensions of pipe (ID may be subjected to variations according to manufacturing tolerances).

Government of Nepal
Ministry of Infrastructure Development
Department of Water Supply and Sewerage Management
Water Supply and Sewerage Management Office
Butwal, Rupandehi
Office Chief

3.3.5.2.3 Connection Types

Pipes shall come with homogenous socket and pre-installed watertight seal/gasket. The watertight seal should include a Polypropylene ring and a synthetic rubber lip which allows the seal to be integrated with the pipe, avoiding joint displacement or movement while the installation is taking place. The connection is done by introducing the male part of the pipe in the socket of the other where the elastic joint is placed.

The below table has the dimensions for the pipe socket. Each pipe must have a mark in the spigot, being the limit mark to which the male end of the pipe should be introduced during installation and thus assure water-tightness.

Nominal Diameter (DN)	Socket Length (SL)	Maximum Diameter (D max)
mm	mm	mm
90	160	117
110	175	140
125	185	154
140	190	174
160	200	197
180	209	-
200	225	243
225	240	271
250	265	301
280	261	-
315	310	374
355	345	419
400	355	472
450	375	527
500	385	587
630	460	734
710	475	815
800	475	925
900	530	1034
1000	565	1143
1100	590	1250
1200	625	1360

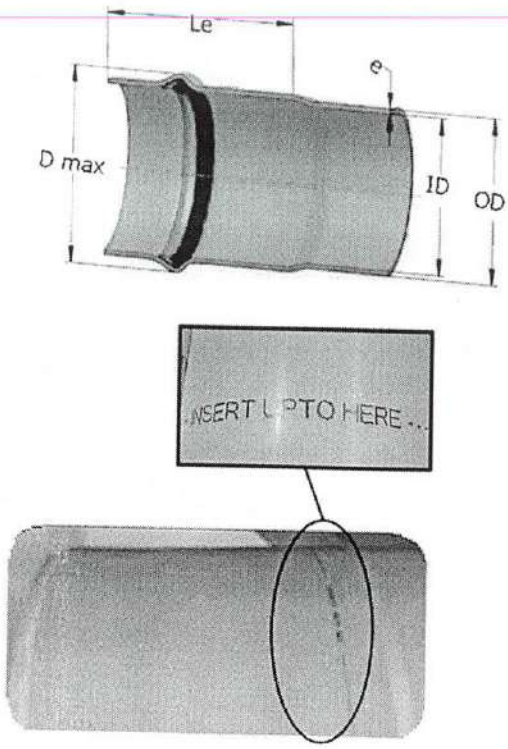

Figure 2 Length limit Mark in Pipe

3.3.5.3 PVC-O Fittings

3.3.5.3.1 Standards for Fittings

Fittings must conform to IS 16647:2017 or CEN/TS 17176-3: 2023, or equivalent standards. Copy of certification is required to be submitted. PVCO fittings should be provided with a proven watertightness seal that includes a polypropylene ring and a synthetic rubber lip.

3.3.5.3.2 Fitting Types and Dimensions

- PVCO couplers and sliding couplers (for repair purpose)
- PVCO Socketed Reducers
- PVCO Socketed Bends (90°, 45°,22.5°, 11.25°)
- Ductile Iron End caps
- Ductile Iron Tees and junctions
- Ductile Iron Flange adaptors
- Ductile iron fittings with certified compatibility

3.3.5.4 Installation and Disinfection

3.3.5.4.1 Installation

- The contractor shall follow the manufacturer's guidelines for storage, handling, and installation.
- Pipes shall be laid following the specifications outlined in the contract documents.
- Joints shall be inspected and tested before backfilling.

3.3.5.4.2 Disinfection

After hydrostatic pressure testing, pipes shall be disinfected using chlorine solutions. The contractor shall submit a disinfection procedure for approval. The residual chlorine concentration shall be between 2-4 mg/L before commissioning.

3.3.5.4.3 Transport and Delivery

- The supplier shall notify the engineer one week before each consignment.
- A detailed delivery note shall accompany each shipment.
- Pipes shall be delivered to the designated storage area.

3.3.6 Measurement and Payment

Unless and otherwise mentioned in BOQ:

All pipes works of HTS, DI, GI, PE or PVCO shall be measured according to the work actually carried out and no allowance will be made for any waste in cutting to the exact length required.

The rate for supply including transportation, laying and jointing of DI and other pipes and fittings shall be deemed to include the cost of supply, laying, jointing and other temporary provision for pipe works not mentioned in BOQ.

Pipes shall be described by their internal diameter. The pipe work shall be measured in running meters. The measurement shall be taken along the centre line of pipe excluding fittings which shall be measured separately. The lengths of pipes shall not include the portion of spigots within the sockets of fittings and pipes.

If any damage is caused to the pipeline during the execution of work or while cleaning/testing the pipeline as specified, Contractor shall he held responsible for the same and shall replace the damaged pipeline and retest the same at his own cost of the full satisfaction of Engineer.

Fittings and specials shall be described by their internal diameter. The supply including transportation and installation of fittings and specials associated with pipeline work shall be measured in numbers or set.

The cost for field testing as per BOQ shall be paid only for single time successful testing. Cost of the field testing shall be measured in meter length of corresponding pipe size inclusive of supply, assembling and de-assembling (after the successful testing) of suitable Pressure Pump (with engine or motor), Pressure Gauge, Pressure Recorder, Suction Hose, Connection Hose, Overflow Hose, Potable Water, Water Tank With Water Meter, Connection Pieces (including valves or cocks), all DI fittings (Blind Flanges, Flanged Spigots, Flanged Sockets, Gaskets for Blind Flange, Concrete blocks, sand bags and all other accessories required for the field pressure testing.

Suitable GI ducting for road and / or drain crossing (for laying of Communication Pipe and other pipes as instructed by the Engineer) shall be responsibility of the Contractor. The items required (GI pipe and other accessories) for the ducting shall be arranged by the contractor at his own cost.

Other cost not mentioned in BOQ for pipeline works as an item shall be arranged by Contractor at his own cost.

Government of Nepal
Ministry of Infrastructure Development
Department of Water Supply and Sewerage Management Office
Water Supply and Sewerage Management Office
Butwal, Rupandehi

Office Chief

4 WATER METERS

4.1 Household Revenue Meters

4.1.1 General

All water meters shall be dry dial Volumetric Rotary Piston water meter with the essential features of household water meters described in the following sections are sought for supply and installation.

4.1.2 Materials

Only the best quality and type of materials shall be used, which shall be suitable for the purpose intended. Unless otherwise specified, materials shall be selected by the supplier. The materials shall be appropriate both mechanically and chemically to the operating conditions. In connecting units they shall be mechanically chemically and electrochemically compatible with one another and with the environment.

Materials shall be selected to the adequate resistance against abrasion and corrosion. Where necessary, protective coating and lining shall be applied.

All materials in contact with the potable water shall be non-toxic and shall not affect the quality of the potable water at any given time.

4.1.3 Design and Construction

Design and construction shall be conforming to ISO 4064 requirements and according to ISO and Nepalese standards if any, for cold water meters. The meters shall be Metrological Class B for cold water up to 40°C (working range 5°C to 40°C) and pressure-rating of minimum PN 10. Pressure loss shall be on a minimum.

All water meters shall be provided with an efficacious replaceable strainer in the inlet fitting. The strainer screen shall be rigid, fit snugly, be easy removable and have an effective straining area at least double that of the inlet.

Meters shall be dry dial and have modular design, consisting of an outlet case and separate measuring chamber. For calibration, replacement or maintenance the dry section shall be easy to repair and maintain. There should be a provision for change of the counting devises without dismantling the meter from its position.

The dry compartment register (Dry Dial) shall be possible to turn on 360° and the glass shall be scratchproof and transparent. Registration shall be direct reading digital counter, with a singly to show the smallest measurement.

Registration shall be in cubic meters. For ease and accuracy of calibration and adjustment, dials shall register or as to permit accurate readings of 0.05% of the nominal discharge.

All meters shall be provided with wire and lead seals, both to the register and to the plug covering the adjustment screws.

The calibration screw shall be suitable to a wire and lead seal, also to the register and to the plug covering the adjustment screws.

A strainer shall be fitted to the inlet of each water meter. The strainer screen shall be rigid, fit snugly, be easily removable and have an effective straining area at least double that of the inlet.

All parts shall have smooth surface, special the parts in contact with water to prevent encrustation.

The water meter shall be suitable for out- and indoor connection for tough conditions.

Each delivered part shall be new and not used before and supplied according to technical specifications descript.

The water meter shall be designed for a lifetime of 10 years of normal operating conditions.

Weight of each meters shall be minimum of 1.3 kg with connections and 1.1 kg without connection.

4.1.4 Markings

The following markings shall be provided on the meters:

- One arrow caste on the body indicating the flow direction,
- Nominal size of the water meter to be caste on the body,
- Identification of the model, class, ISO standard or approval by international body, serial number and year of manufacturing engraved on the body or indelibly marked on the dial, and
- Manufacturers name and serial number engraved on the lid or otherwise suitably marked.

Government of Nepal
Ministry of Infrastructure Development
Department of Water Supply and Sewerage Management
Water Supply and Sewerage Management Office
Butwal, Rupandehi

Office Chief

4.1.5 Meter Performance

Required Performance and accuracy shall be as indicated below. The range of measured flow rates is sub divided into 3 reaches. The limits being defined by the following flow rates:

Identification	Description Value	Remarks
Qs	Starting Flow rate	
Qm	Minimum flow rate for reliable registration	Error permission +/- 5%
Q1	Limiting flow rate for increased accuracy of registration	Error permission +/- 2%
Qn	Nominal flow rate for continuous or limiting function.	Error permission +/- 2%
Qmax	Maximum flow rate at which the meter shall function for a limited time without exceeding a metering error	Error permission +/- 2% Qmax should be 2 x Qn
H wz in bar	Pressure loss in Qm and Qmax	With installed strainer
P	Maximal permissible pressure	Min. requirement 10 bar (+ 50% for 30 minutes)

4.1.6 Factory Warranty

Warranty starts from the day of delivery and written acceptance by the client and shall be minimum 2 years after installation. This includes:

- Meter performance,
- Materials, and
- Function.

4.1.7 Essential Features

All water meter shall be of ND 15 volumetric water meters, with Rotary Piston. The two ends shall be threaded connection and the inlet and outlet shall have a common axis. They shall have water tight dismantling coupling on each side to allow easy removal of the instrument from the pipe works.

A plug-in non-return valve shall be fitted on the outlet site of the water meters with to prevent backflow of the water.

Installation of the water meter can be done in horizontal and vertical position without hampering meters' performance.

The water meter shall be suitable for out- and indoor connection for tough conditions and shall afford reasonable safeguards against destruction. Special regards shall be given to the strength of the glass and the cover-lid.

The dial shall be easy-read in cubic meters with a digit roller but also pointers for control and calibration. The body as well as all parts in water contact shall be in corrosion free materials and approved for drinking water and to be a short construction the connection shall be in thread connection according to ISO. Adequate connecting nipples for the inlet as well as for the outlet together with all necessary seals shall be provided.

The meter body shall be manufactured from bronze metal (containing a minimum of 50 to 60% of copper).

The meters shall have the following minimum performance characteristics:

ND, mm	15
Flow rate Qn m^3/h	1.00
Maximum flow rate Qmax m^3/h	2.00
Minimum flow rate Qmin m^3/h	0.020

Otherwise water meters shall comply with Class C EEC standard.

Government of Nepal
Ministry of Infrastructure Development
Department of Water Supply and Sewerage Management Office
Butwal, Rupandehi

Office Chief

4.1.8 Testing

It is required that the quality and the compliance with these specifications shall be demonstrated for all materials and equipment by appropriate tests performed during the various phases of the work of production.

The minimum test pressure shall be the specified nominal pressure plus 50%. This pressure shall be applied increasing from 0 to maximum event over 15 minutes.

The test pressure shall be held without pressure drop for at least half an hour without any sign of leakage.

The measuring devices used in shop testing shall afford the following accuracy:

- Capacity : plus minus 0.1%
- Differential head : plus minus 1%
- Time measurement : plus minus 0.03%

Shop testing shall be run with water of not more than 40 degree C and not less that 10 degree C temperature. Shop testing shall sufficiently cover the entire range of the capacity to demonstrate that the characteristics are stable.

Each point shall have at least 3 (three) readings and the arithmetic means shall be considered the proven value.

None of the individual readings shall differ from the specified limits more that in admissible by accuracy of measurement as defined above.

The arithmetic mean of all readings for one performance point shall be within the specified limits.

4.2 Bulk Water Meters

4.2.1 General Applications

Water meters supplied and installation under this Contract must be of first quality and shall be designed to withstand the stated pressures and temperatures.

All water meters shall belong to a class which can withstand the stated maximum pressure, they will attain in service including any surge pressure.

Flanged joints of all water meters shall be provided with required numbers of bolts, nuts, washers and gaskets, which conform to DIN 2690, inside with steel ring, and the faces of all flanges shall be machined to give a true angle of 90° to the centre line of the pipe or fitting.

Before being dispatched from the place of manufacture the ends of the water meters, shall be suitably capped and covered to prevent any accumulation of dirt or damage.

Where the coating of water meters is damaged during delivery, the surface shall be cleaned and dried and the Contractor shall paint the damaged area with a minimum of three coats of paint and to the full thickness and specification as the original coating.

4.2.2 Reference to standards

In general, the relevant DIN, ISO or EN standards shall be applied. Reference to any other national standard or publication in these Specifications is intended to indicate general configuration, type and quality only.

The following general standards shall apply in addition to those specially indicated in the "Bill of Quantities" and other chapters of the Technical Specifications.

- ISO 4064-1: Measurement of water flow in closed conduits – Meters for cold potable water-Specifications
- ISO 4064-2: Measurement of water flow in closed conduits – Meters for cold potable water – Installation requirements
- ISO 4064-3: Measurement of water flow in closed conduits – Meters for cold potable water – Test methods and equipment
- DIN 3547 for testing and approving of appurtenances in water supply, and
- DIN/ISO 9001 as quality assurance

Goods meeting other internationally accepted standards may be furnished, provided that overall quality will be at least equal to that required by the standards specified.

Government of Nepal
Ministry of Infrastructure Development
Department of Water Supply and Sewerage Management
Water Supply Management Office
Butwal, Rupandehi

Office Chief

4.2.3 Shop testing and inspection

If required by the Engineer, the inspection of water meters will take place on the manufacturer's premises according to ISO 4064/3. The Contractor shall provide the testing equipment, the needed material, the checking devices and necessary trained personnel.

Inspection of external appearance, shape, dimensions and weight shall be carried out for each water meter, appurtenances and accessories. This includes inspection of external appearance, shape and dimensions for each type of water meter according to ISO 4064. All water meters, appurtenances and accessories shall be sound and free from surface defects.

Accuracy tests shall be performed on test water meters selected at random out of batches, grouped in different types of water meters, as follows:

- 5% of the total quantity or at least one water meter per diameter and type

Each successfully tested batch will be identified by a mark. Results of all such tests shall be submitted to the Engineer on a previously approved certificate or form certified by the manufacturer or by a recognized agency.

Pieces of which the deviations from standard dimensions or accuracy exceed the tolerances shall be rejected.

4.2.4 Submittals

The Contractor shall furnish to the Engineer the following:

- A sworn statement that the inspection and all of the specified tests have been made and the results thereof comply with the applicable standard.
- Results of tested water meters.

4.2.5 Handling and storing

Care shall be taken during loading, transporting, and unloading to prevent damage to the materials or coatings. Water meters that were examined and found to be defective shall not be accepted. Any damage to the water meter shall be repaired as directed by the Engineer.

Special handling of water meters shall be in accordance with the manufacturer's instructions.

Particular care shall be taken during loading, unloading, handling and transportation to avoid distortion, flattening, denting, scoring or any other damages to the water meters.

Any goods which, in the opinion of the Purchasers' representative are delivered damaged or are damaged by the Contractor in the process of stockpiling at the delivery site shall be promptly removed from the site. The Contractor shall receive no compensation for the damaged material or its removal until it is either repaired to the satisfaction of the Engineer or completely replaced.

4.2.6 General Design and Construction

Meters shall be designed for use in climate ranging from -5°C to 45°C.

Meters shall have a modular design, consisting of an outlet case and separate measuring chamber. The measuring chamber shall be removable and rapidly exchangeable without removing the body.

Registration shall be by direct straight reading in cubic meters with single pointers to show the smallest measurements. The pointers shall move in clockwise direction.

For ease and accuracy of calibration and adjustment, dials shall register so as permit accurate readings of ±0.5% of the nominal discharge.

Dials cover for dry type water meters shall provide an air-tight seal.

All revenue water meters shall be provided with a lid, which shall be recessed and shall overlap the registration box to protect the lens.

All meters shall be provided with wire and lead seals, both to the register and to the plug covering the adjustment screws.

All parts in contact with the water shall have smooth surfaces, protected where necessary to prevent incrustation.

Water meters shall be designed for a lifetime of 10 years under normal operating conditions.

4.2.7 Requirements

The water meters shall be of the Woltman type and shall comply with ISO 4064 or BS 5728 Class B. They shall be of horizontal type with completely water proof encased gear train, magnetic transmission and registration, shielded against tampering or any external magnetic field.

The water meters' bodies may be protective coated ductile or cast iron but all internal mechanisms must be composed of corrosion free materials; viz. usually stainless steel or composite plastics. Meter bodies should preferably be epoxy powder coated for protection in all environments. All materials for internal parts like thrust pads and stud spindles should be of high quality like tungsten carbide for maximum life against wear.

An inline strainer is also recommended to protect the rotor and reduce the effect of turbulence.

Water meter body connections must be flanged with flanges to ISO 7005 Part 2 PN 10 (identical to BS 4504 PN 10).

The ends of water meters to accommodate flange adapters and couplings shall be faced and sized to the tolerances recommended by the manufacturer of the coupling. The faces of flanges shall be machined to give a true angle of 90° to the centre line of the meter. The flanged inlet and outlet shall have a common axis

The required meters shall meet following requirements:

- Meters shall be equipped with counter-mechanism flood and moister proof (IP 68), glass-copper-capsuled, counter-device turnable for 360°.
- Range of temperature: up to 45 °C, overload for a short time up to 50 °C.
- Working pressure: up to 16 bar
- All meters shall be equipped so that an additional installation of pulsing equipments as integrated part of the water meter is possible.
- The transmitting head shall allow the connection of any optical electronic pulse unit without breaking the meteorological seal.
- Protection covers shall made of special plastic, covers must be suitable for use of future impulse connection without later removal or replacement
- All water meters must be supplied with corroded prove bolts, nuts and washers according to DIN 50976 and one set of flanged gaskets of NBR, steel reinforced and approved for drinking water.

4.2.8 Technical requirements

Each meter shall have following minimum technical requirements:

- horizontal counter-mechanism
- glass-copper-capsule
- counter-device horizontal turn able 360° for better read ability
- housing shielded against tampering or any external magnetic field and magnetic transmission and registration
- transmitting head shall allow the connection of optical electronic pulse unit without breaking the meteorological seal. Contractor shall submit brochures/specifications of such electronic add-ons.
- measuring unit shall be exchangeable for exchange without removing the body of the meter from the line
- Regulation device must be placed under the counter-mechanism optimal corrosion-proof (secured by powder-coat)
- Means of adjustment by a by-pass chamber and screw which adjusts the cross-section of the chamber. The adjustment screw shall be operable from outside the meter, and shall be protected by a screw in sealed plug.
- Wire and lead seals, both to the register and to the plug covering the adjustment screws.
- Surfaces in contact with water shall have smooth surfaces, protected where necessary to prevent incrustation.

4.2.9 Markings

Each meter shall be marked on the casing or display with the following information:

- At least one arrow cast onto the body indicating direction of flow
- Nominal size
- Nominal flow rate (Qn) preferably on counter housing
- Model identification
- Year of manufacture
- Serial number

- Manufacturer's name

Government of Nepal
Ministry of Infrastructure Development
Department of Water Supply and Sewerage Management
Water Supply and Sewerage Management Office
Butwal, Rupandehi

Office Chief

In case not indicated differently the information shall be cast onto the body or engraved on the lid or painted onto the counter housing or otherwise suitably marked.

4.2.10 Characteristic flows

General performance and accuracy shall be as indicated below. The range of measured flow rates is subdivided into three reaches, the limits being defined by the following flow rates:

Qs = Starting flow rate. Below this flow rate the register will not show any reactions.

Qmin = minimum flow rate for reliable registration ± 5%

Q1 = limiting flow rate for increased accuracy of registration

Qn = nominal flow rate for continuous or intermittent function of the water meter ± 2%

Qmax = maximum flow rate at which the meter may function for limited time without damage

Minimum Performance Specifications (Revenue Flow Meters)

Meter Size (mm)	Unit	50	80	100	125	150	200	250	300
Minimum Flow Qmin +/- 5%	m3/h	≤.0.50	≤1.20	≤.1.80	≤.3.00	≤.4.50	≤.7.50	≤.12.0	≤.18.0
Nominal Flow Qn +/- 2%	m3/h	15	40	60	100	150	250	400	600
Maximum Flow Qmax +/- 5%	m3/h	30	80	120	200	300	500	800	1200
Weight	Kg	≥10	≥13	≥17	≥20	≥29	≥42	≥50	≥50

4.2.11 Accuracies

Accuracy shall be as indicated below

- From Qmin to Qt: the error shall not exceed ± 2%
- From Qt to Qmax: the error shall not exceed ± 1%
- At Qn : the error shall not exceed ± 2%

The Supplier shall include with his Tender the information in a format set out in the Technical Data Sheets regarding the above performance.

4.2.12 Packing

Each meter shall be mounted on a pallet secured against movement, with protection against damages; especially the housing of the counter shall be covered. In case there is sufficient space, more than one piece can be mounted.

4.2.13 Factory Warranty

Factory warranty shall be 128 months after successful test, however minimum 24 months after the installation.

Government of Nepal
Ministry of Infrastructure Development
Department of Water Supply and Sewerage Management
Water Supply and Sewerage Management Office
Butwal, Rupandehi
Office Chief

5 ELECTRICAL INSTALLATIONS

5.1 Scope

This specification covers the general standards to be achieved when installing lighting and small power systems. i.e. guardhouse, operators quarters and site lighting. Details of the electrical works, including relocation of existing NEA lines etc. described in Appendix A; all materials and workmanship on the NEA power system shall be as per NEA practice.

5.2 Interpretations

5.2.1 Supporting Specifications

The following specifications shall, inter alia, form part of and shall be read in conjunction with this specification:

a) 1 Item of General Application

b) 2.2 Earthworks

5.2.2 Application

This specification contains clauses that are generally applicable to electrical installations and associated work.

5.2.3 Abbreviations

Wherever the following abbreviations are used they shall have the meanings below:

Institutional:

AIEE-American Institute of Electrical Engineers

BSI-British Standards Institution

DIN-Deutsches Industrie Normen

IE-Indian Electricity Rules

IEC-International Electrotechnical Commission

ISO-International Organisation for Standardisation

ISI-Indian Standards Institute

NEA-Nepal Electricity Authority

NEC-US National Electrical Code

NEMA-National Electrical Manufacturers' Association

Technical:

R-red phase

Y-yellow phase

B-blue phase

ac-alternating current

dc-direct current

A-amp

mA-milliamp

V-volt

HRC-High Rupturing Capacity

kW-kilowatt

kVA-kilovolt amp

kWh-kilowatt hour

MVA-megavolt amp

Hz-hertz (cycles per second)

SP-single pole

SPN-single pole and neutral

DP-double pole

TP-triple pole

TPN-triple pole and neutral

Government of Nepal
Ministry of Infrastructure Development
Department of Water Supply and Sewerage Management Office
Water Supply and Sewerage Management Office
Butwal, Rupandehi
Office Chief

SPSwN-single pole and switched neutral

TPSwN-triple pole and switched neutral

MCB-miniature circuit breaker

MCCB-moulded case circuit breaker

RCD-residual current device

GES-General Electric Standard

5.3 Materials

5.3.1 Low Voltage Distribution Boards

Low voltage distribution boards shall be of fabricated sheet metal construction, arranged for conduit and/or cable entry as required, fully rust-proofed, painted to an approved finish and protected against ingress of solid foreign bodies and liquid according to IEC Recommendation 144 Degree IP 32. All boards shall be rated as required and shall conform in all respects with IS 13947. Exterior boards shall be protected to IP 65.

Low voltage distribution boards shall have banks of fuses or miniature circuit breakers which are easily removable and readily accessible for easy wiring. All boards shall have 25% spare ways fitted within the case. Incoming supplies to the distribution board shall enter by means of a lockable isolator, switch fuse, residual current device or moulded case circuit breaker.

Boards which have feeders looped in or out at the busbars shall have double terminal blocks on each busbar.

All boards shall have insulating barriers installed between phases and between each phase and earth.

When required suitable holes/knockouts shall be provided to the top or bottom of the board to accommodate all incoming and outgoing cables through rubber washer glands.

Distribution boards shall be fitted with a permanent label giving details of fuses or miniature circuit breakers when their replacement by equipment of other makes or types would adversely affect the protection or discrimination provided.

5.3.2 Fuses

Fuses shall be Category AC 80, 660 volt to IS 13703. Fuse carriers and bases shall comply with IS 13703: Part 2.

5.3.3 Miniature and Moulded Case Circuit Breakers

Miniature and moulded case circuit breakers shall comply with IS 13032 and IS 13947 respectively. All breakers shall be selected in accordance with the Indian Standards with due regard to operating characteristics, current rating, calibration and discrimination. Adequate back-up protection by HRC fuses shall be provided.

Miniature circuit breakers shall be unconditionally rated at a category of duty M6 or higher. The effect of ambient temperatures, operating duty, and application shall be fully considered in applying de-rating factors for application at site.

Miniature and moulded case circuit breakers shall have means for preventing any one pole of a multi pole circuit breaker being operated or tripping independently of the other poles.

Miniature and moulded case circuit breakers shall have locking facilities and be supplied with all keys, or shall be enclosed in cases with locking facilities which shall be provided with keys.

Miniature and moulded case circuit breakers shall be of the same type throughout the Contract.

5.3.4 Residual Current Circuit Breakers

Residual current operated devices are to be either 3 phase and neutral or 1 phase and neutral. Both types will be of the circuit current rating and rated tripping current as stated elsewhere in this Specification or on the drawings. Either type must isolate all poles and neutral and be complete with a test button marked 'PUSH TO TEST'. The unit must be of robust construction and be mounted in an enclosure of pressed steel.

Where residual current circuit breakers are used they shall be of the ac/dc current operated type complying with IS 12640 when incorporated in fixed socket outlets, except that they shall be suitable for the service conditions as defined at site.

5.3.5 Cables

All cables shall be manufactured to Nepalese Standards

(i) Low voltage (600/1000 V grade)

- PVC/SWA/PVC and XLPE/SWA/PVC multicore cable. Installed direct in the ground, in ducts, on tray or clipped direct. Aluminum wire armouring shall be used for single core cables.

Government of Nepal
Ministry of Infrastructure Development
Department of Water Supply and Sewerage Management
Water Supply and Sewerage Management Office
Butwal, Rupandehi
Office Chief

(ii) Low voltage (600/1000 V grade)

- PVC/PVC multicore cable to BS 6346. Installed in floor ducts, trunking or conduits.
- PVC single core non-sheathed (450/750 V grade). Installed in conduit or trunking.
- PVC single core non-sheathed (600/1 000 V). Installed as internal wiring within switchgear and control assemblies.

(iii) Instrumentation

- PE/PSCR/OSCR/PE/SWA/PVC Plain annealed multistranded copper conductors, solid polyethylene insulation with aluminium-mylar pair screening including drain wire, with collective aluminium mylar screen including drain wire, solid polyethylene bedded steel wire armour with an outer sheath of flame retardant PVC. PVC sheath to be blue colour for intrinsically safe circuits, black for ac and dc non- intrinsically safe circuits, 300/500 V grade.

(iv) Control Digital

- PE/OSCR/PE/SWA/PVC Plain annealed multistranded copper conductors, solid polyethylene insulation collective aluminium mylar screen including drain wire, solid polyethylene bedded steel wire armour with an outer sheath of flame retardant PVC. PVC sheath to be blue colour for intrinsically safe circuits, black for ac and dc non-intrinsically safe circuits, 300/500 V grade.

5.3.6 Site Lighting

Poles shall have:-

(i) A weatherproof access door to the base compartment, fitted with tamper proof lock, to provide easy access to the equipment. The doors shall be inter-changeable between poles without adaption, and keys shall be supplied. Doors shall be provided with an earthing terminal for connection of an earth continuity conductor to the earth terminal block installed in the base compartment.

(ii) A non-rusting earthing terminal bar near to the point of electrical supply and clearly marked 'earth'. This terminal shall be capable of accommodating an earth continuity conductor not less than 6 mm2 nominal cross sectional area.

(iii) Cable slot entries of not less than 150 mm long by 50 mm wide. The top of the slots shall be no more than 350 mm below ground level.

(iv) A treated base board, within the compartment, of suitable size to accommodate all necessary control gear, cable terminations and looping type fuse service cut out. The base board shall be securely fixed within the pole.

Cut-outs housed in the base compartments of lighting poles shall be designed primarily for use in street lighting poles and shall be suitable for termination or looping-in of the cables used. They shall consist of a substantial moulded plastic drip-proof enclosure with separate terminals for live, neutral and earth conductors, and incorporate a fuse carrier suitable for a fuse to IS 13703. Terminals shall be large enough to take the service cables used.

Three way type earth terminal block capable of accepting a cable size up to 6 mm2. shall be fixed to the base board adjacent to the cut-out. The terminal block may be incorporated within the cut-out.

Ballast units shall comply with IS 1534 and shall be drip-proof, totally enclosed, polyester filled, symmetrically wound type, silent in operation, and suitable for use on a 240 volt 50 Hz supply. Tappings shall be brought to suitable marked terminals to which lamp and supply connections can be made. Terminals shall be shrouded non-track type, and separate earth terminals shall be provided.

Capacitors shall comply with IS 1569 and shall be of the unfused type, totally enclosed and proofed against condensation and climatic conditions, complete with discharge resistor, with sealed-in PVC insulated cable tails. Capacitors shall be suitable for working with the lamps and associated equipment specified and shall correct the power factor to not less than 0.85 lagging. The capacitors shall be marked with the manufacturer's name, capacitance and working voltage. Ballasts and capacitors shall carry the ISI mark.

Wiring between the terminal block in the lantern and the components in the base of the pole shall be PVC insulated, PVC sheathed cable of 1000 V grade having a copper conductor of not less than 2.5 mm2 cross sectional area to IS 694. All cables shall be correctly colour coded. Unsupported lengths of wiring shall be kept to a minimum and taped such that they do not come into contact with components.

All metalwork other than current carrying parts shall be earthed.

Road lighting luminaries shall be die cast from aluminum alloy suitable for side entry spigot mounting. The luminaries shall be complete with polished aluminum reflector for use with the lamps and remotely mounted control gear. The impact resisting bowl shall be sealed to provide a totally weatherproof unit and hinged to facilitate revamping.

Discharge lamps shall carry a 6000 hour guarantee, and shall be controlled by ballasts and capacitors, as recommended by the lamp manufacturer. High pressure sodium discharge lamps shall be provided with an external ignitor unit.

Office Chief

5.3.7 Lighting Luminaries

All 'discharge' luminaries shall be provided with a capacitor for the purpose of power factor correction to a value in excess of 0.85 lagging.

Breakjoint rings or 'biscuit' rings of approved colour shall be provided by the Contractor for all suspended luminaries and fluorescent batten luminaries where the batten is of insufficient width to completely cover the conduit box and its associated clearance hole in the finished ceiling.

Heat resisting cables shall be installed as the final connection to all tungsten luminaries.

All flexible cords to be used in conjunction with lighting luminaries shall be white 3 core circular 300/500 volt grade PVC insulated and sheathed manufactured to IS 694. Conductors smaller than 0.75 mm2 cross sectional area shall not be used unless previously approved by the Engineer.

Fluorescent and incandescent luminaries shall be of the following types:

- A. Tubular fluorescent luminaries:
  - Reflection
  - Diffuser
- B. Incandescent type:
  - Reflection/Shade
  - Diffuser
  - Water proof
  - Bulk head

5.3.8 Lamps

Tungsten lamps shall be coiled coil pattern to IS 418 and IS 6702. Fluorescent lamps shall be manufactured to IS 2418. High pressure mercury lamps shall be manufactured to IS 9900. High pressure sodium lamps shall be manufactured to IS 9974.

Incandescent lamps shall have IEC type B22d caps. Tubular fluorescent lamps shall have bi-pin caps. Discharge lamps shall have type ES 40 caps (GES).

5.3.9 Lighting Switches

Lighting switches for domestic and office purposes shall comply with IS 3854. They shall be of approved manufacture with shuttered outlets.

5.3.10 Small Power Outlets

For domestic and office applications, 13 amp socket outlets which comply with IS 1293 shall be used. These shall be switched unless otherwise indicated and supplied with a plug fitted with a fuse rated according to IS 13703. The fuse shall suit the apparatus served.

Where cooker control units are installed, double pole switches of suitable rating shall be installed without a socket outlet.

Fused spur units shall be of approved manufacture, of the same type and finish as socket outlets installed. Fuses to IS 13703 shall be sized to suit the connected load.

5.3.11 Ceiling Fans

Propeller fans of the non-ducted ceiling mounting type together with their associated control units shall comply with IS 374 and IS 3588.

5.3.12 Conduits

Rigid conduit shall be super high impact heavy gauge PVC conduit (HIP) and PVC accessories complying in all respects with IS 9537 and IS 3419. Each length of conduit shall bear the manufacturer's name or trademark and be smooth inside and out and free from imperfections.

20 mm diameter conduit shall have minimum 1.8 mm wall thickness; 25 mm diameter conduit shall have a minimum 1.9 mm wall thickness.

Flexible conduit shall be of the waterproof galvanized type or PVC wire-wound type with cadmium plated mild steel couplings.

Government of Nepal
Ministry of Urban Development
Department of Water Supply and Sewerage Management
Water Supply and Sewerage Management Office
Butwal, Rupandehi
Office Chief

5.3.13 Earth Electrodes

Earth electrodes shall be 38 mm diameter galvanized iron rods made up in sections to the required length. Couplings joining rods shall be silicone bronze aluminum counter bored and of sufficient length to cover the rod thread.

Earth plates shall be of a minimum size of 600 x 600 x 6 mm copper or galvanised iron.

5.4 Plant And Equipment

Plant, equipment, and tools for the execution of electrical installations shall be sufficient in number and capacity, in good working order, and in accordance with the requirements of the applicable safety regulations.

5.5 Construction and Workmanship

5.5.1 Regulations and Standards

The electrical installation shall comply with all relevant IS regulations, statutory instruments and regulations current at date of Bid (unless otherwise indicated.

The Contractor shall be responsible for complying with all local byelaws, supply authority and local authority requirements. It shall be the Contractor's responsibility to determine the existence of these requirements and to comply with them.

5.5.2 Cable Installation

Cables to lighting and small power circuits shall be of one of the following sizes unless indicated otherwise:

i) 1.5 mm2 single core PVC for circuits loaded less than 1 kW.
ii) 2.5 mm2 single core PVC for circuits loaded up to 3 kW.
(iii) 4 mm2/6 mm2 2 core PVC for circuits loaded above 3 kVv
iv) 1.0 mm2 light duty multicore PVC for control circuits.

Cables shall be segregated into the following categories:

i) power (less than 1 000 V phase to phase)
ii) instrumentation/telemetry
iii) control
iv) Telecommunications.

Cables shall be laid in a manner such that any electrical interference between cables shall not have a detrimental effect on the life and operation of equipment installed within the installation. As a general rule the following minimum clearances shall be adhered to wherever practical.

	HV power (mm)	MV/LV power (mm)	Instrumentation Telemetry Control (mm)	Telecommunications (mm)
HV power	-	-	-	-
MV/LV power	300	-	-	-
Instrumentation/ telemetry/control	300	150	-	-
Telecommunications local area network	300	150	150	-

LV power cables may be bundled together where allowance is made for any derating factors.

Digital and analogue signals shall be segregated within junction boxes.

Cables shall be drawn into conduits simultaneously without twists. Cables bunched into circular groups shall have the appropriate de-rating factor applied in accordance with Appendix 9 of the IEE Regulations.

Cables shall be installed on the 'loop-in' principle, no joints or junction boxes being permitted. Single core cables in conduit shall have the line conductors looped at switches and the neutral conductors looped at lighting points. Multicore cables, shall have the line and neutral conductors looped at the lighting point.

Wiring shall not be looped at terminal blocks internal to lighting luminaries. For fluorescent or similar luminaries having internal terminal blocks, the fixed wiring shall terminate at the conduit box with tails taken into the fitting. The arrangement shall be such that the fittings and tails may be removed without causing the other lighting luminaries on the circuit to be disconnected.

Wiring to 13 A socket outlet circuits shall be ring wired throughout. Spur circuits shall be used only where specified.

(i) General

Cables shall be installed in such a way that the minimum bending radii are not reduced when installed or during installation. Cables shall not be installed in ambient temperatures below that recommended by the cable manufacturer.

Cables grouped together shall have insulation capable of withstanding the highest voltage present in the group.

(ii) Direct in Ground

Buried cable up to 600/1000 V shall have a minimum cover of 500 mm measured to the top of the highest cable. On crossing roadways the cable shall be run through a PVC-U duct of minimum diameter 100 mm with a minimum of 1000 mm cover and encased on all sides by 150 mm of concrete.

The bottom of the cable trench shall be freed of sharp stones and such like and 75 mm of sieved sand laid below the cable. After cable laying 75 mm of sieved sand shall be laid above the cable.

Interlocking cable protective covers, minimum 1 m long x 150 mm wide, marked 'Danger -Electric Cable' in English, and Nepali shall be laid on top of the sieved sand. Covers shall extend the whole length of the cable trench and shall overlap cables by a minimum of 50 mm.

Warning tape shall be laid a minimum of 200 mm above the protective covers.

Cables are to be installed without tees or through joints unless otherwise approved by the Engineer. Single core cables are to be run in trefoil formation.

(iii) In Underground Ducts

Underground ducts shall be constructed of impact resistant PVC-U, glazed earthenware or concrete and laid at a minimum depth of 500 mm. Ducts shall be surrounded by at least 75 mm of sieved sand except at road crossings where they shall be 1 m deep and encased on all sides by concrete.

The Contractor shall ensure that sufficient draw-in points have been provided and that adequate room has been allowed for installation of cables. Drawstrings shall be provided in all ducts to enable additional cables to be installed when required.

Where cables pass in or out of any duct entries into or within buildings such entries, together with any spare ducts shall be sealed against the ingress of moisture by means of duct stoppers and bituminous compounds or other method approved by the Engineer. The stopper shall have a fire resistance of at least 30 minutes. Single core cables in trefoil formation shall pass through the same duct and shall not be separated.

(iv) Conduit

Particular care shall be taken with the storage of conduit. A rack shall be provided for this purpose to ensure that the finish is not defaced. Conduit which is allowed to spread across the floor when stored so that the surface finish becomes damaged by being walked over or similar shall be rejected and removed from site.

All conduits shall be of sufficient size to permit the easy withdrawal and replacement of cables at a later date, no conduit smaller than 20 mm shall be used.

A space factor of 40% shall not be exceeded. The tubing shall be perfectly smooth inside and out and free from flaws and imperfections of any kind. Both ends of every length of tubing shall be properly reamed with all sharp edges removed before erection.

All bends shall be formed using bending springs in complete accordance with the manufacturer's instructions, and without alteration to the conduit section. Bends may be formed cold but in severe weather it may be necessary to warm the conduit slightly at the point where the bend is to be made. The inside radius of any bend shall not be less than 8 times of outside diameter of the conduit.

All conduit boxes on to which lighting fittings are to be affixed shall be capable of withstanding a dead weight of 10 kg and shall be fixed using two screws and washers. No weight shall be taken by any suspended ceiling.

For conduit boxes, couplers and all items of equipment that require adhesives, the manufacturer's recommended adhesive shall be used. Connection to square or rectangular boxes shall be made using female threaded sockets and male screwed bushes. On no account shall the conduit protrude into such items as switch boxes or socket boxes. Inspection bends, elbows, couplings and tees shall not be used.

Circular PVC boxes, having spout entries, shall be used at the termination of all lighting points and as draw-in boxes on long runs. For 20 mm conduits round boxes shall be used as draw-in points, but for 25 mm and larger conduits, rectangular boxes shall be used. In each case heavy quality lids shall be used and secured by brass screws.

Sufficient draw-in boxes shall be installed to permit the re-wiring of the installation and they shall be positioned to ensure that all boxes are in accessible positions. The Contractor shall check all proposed positions with the Engineer before installation. In the case of flush draw-in boxes the Contractor shall fit a joint ring or spacer ring to finished plaster level.

Generally not more than two bends or offsets or one coupling will be permitted without a suitable inspection accessory. Fish wires shall not be left in conduits after erection. The whole of the installation shall be arranged for a loop-in type of system with joints being carried out at switches, isolators, etc. Intermediate joints in the cable will only be allowed by arrangement with the Engineer. Where terminal blocks are necessary, they shall be of the porcelain type with brass pinching screws.

For entry into trunking and any item requiring holes to be cut, the method shall be by bell mouth bushes and sleeves. For entry into sheet metal boxes and any item complete with pre-cut holes, the method shall be by threaded female sockets and male screwed bushes.

Ends of conduits which are liable to be left open for any length of time during building operations shall be plugged to prevent the ingress of dirt, cement, etc. and covers, either temporary or permanent, shall be fitted on all boxes.

The conduits shall be completely assembled, fixed and swabbed out before wiring is commenced.

Generally, conduits shall not cross expansion joints of buildings, but where they cannot be installed in any other manner then a flexible conduit shall be used across the expansion joint. A total 150 mm movement shall be allowed.

The Contractor shall provide a typical installation method drawing for all conduit installations, when requested by the Engineer.

Where conduits are taken through walls and/or floors, the holes shall be made good with incombustible material.

All conduits to the telephone, TV and radio systems shall be installed with draw wires.

All conduits to lighting and small power systems shall be installed with a circuit protective conductor.

(a) Surface Installation

All surface work, work in ducts or ceiling voids, etc., shall be secured by means of heavy quality spacer bar saddles secured by screws driven into rawlplugs, or equivalent fiber, PVC, metal or compound types. The spacing of fixings shall not exceed 1.25 m for 20 mm, 25 mm and 32 mm conduit or less in hot temperatures. It should be noted that saddles are designed to be a sliding fit for PVC conduits and it is important to ensure that all fixings are sliding due to the requirement for expansion.

Due to the materials used in PVC conduits a rise in temperature of 25^0 C would cause an increase of approximately 6 mm in a 4 m length of conduit. Where long straight runs in excess of 4 m occur in conditions of varying temperature, expansion couplers must be used in accordance with the manufacturer's installation instructions. A draw wire must be installed in runs where expansion couplings are used.

An efficient means shall be adopted to provide for the drainage of condensation and the runs shall be properly ventilated. All surface conduit runs shall be marked out for approval by the Engineer before the installation is carried out. Where large multiple parallel conduit runs would occur, use may be made of galvanized cable trunking.

(b) Concealed Installation

If the floor of any building is of solid concrete construction, conduits shall not be run in the screed rising to the outlets, etc., unless specifically instructed elsewhere in this Specification.

Where, due to the type of construction, it is necessary to cast conduits into concrete to serve lighting points, backed outlet boxes shall be used, using female threaded sockets and male screwed bushes, with the conduit installed in such a manner as to be self draining in accordance with the IEE Regulations.

Concealed conduits shall be securely fixed to prevent movement before laying of screeds, floating of plaster, casting of columns or other building operations necessary after the conduit installation. Crampets or similar fixings shall be used for attaching the conduit to blockwork, etc. Building nails will not be accepted.

At least 15 mm cover shall be allowed for finishes over the conduit. Where this cover cannot be maintained then expanded metal shall be fitted with the conduit. Conduit cast into reinforced concrete floors shall be fixed to the steel reinforcing with binding wire and the conduit boxes filled with expanded polystyrene or enclosed in a plastic bag to prevent the ingress of concrete when poured. Where possible, the conduit boxes shall be fixed to shuttering to give a flush finish.

Conduit installed in voids, false ceilings, and other concealed routes shall be installed as specified for the surface conduits. Wiring shall be carried out after the false ceiling or permanent ducts have been completed. Conduit installed in floors shall be sealed against ingress of moisture.

The conduit installation shall be inspected by the Engineer before the building operation conceals the work.

(c) Flexible Conduit

Flexible conduit shall be of the waterproof galvanized type or PVC wire-wound type with cadmium plated mild steel couplings. Lengths of flexible conduits shall be sufficient to permit withdrawal, adjustment or movement of the equipment to which it is attached and shall have a minimum length of 300 mm. Flexible conduit shall not be used as a means of providing earth continuity. A single earth conductor of adequate size shall be installed external to the conduit complete with earth terminations.

Where conversion from rigid conduit to flexible metallic conduit is to be made, the rigid conduit shall terminate in a through type box and the flexible conduit shall extend from this box to the equipment. The earth continuity cable shall be secured to the box and to the piece of equipment by properly designed earthing screws. The use of lid facing screws, etc., will not be permitted. Adapters shall incorporate a grub screw or a gland to prevent the flexible conduit becoming loose.

(d) Clipped Direct

All cable hangers, clips, cleats and saddles shall be of an approved type and appropriate to the type and size of cable installed.

Their spacing shall be such as to ensure a neat appearance and prevent sagging of the cables at all times during their installed life.

(e) In Internal Floor Trenches

In shallow trenches used for electrical services only, cables may be laid in a neat and orderly manner on the floor of the trench. One layer only shall be allowed. Additional cables shall be installed on the walls of the trench in an approved manner.

Where the trench is shared by other services, cables shall be installed on the walls of the trench in an approved manner.

5.5.3 Distribution Boards

Where boards are fixed on steelwork or concrete columns, reinforced concrete or brick walls, they shall be mounted on the surface with conduits and/or trunking rising vertically from them.

Where boards are fixed on plaster finished walls, they shall be surface mounted on the finished face of the plaster with an adaptable galvanized metal box (minimum size 150 x 150 x 75 mm), recessed into the wall at the back of each board.

The adaptable box and fuse board shall be electrically and mechanically linked together, but independently fixed on the wall by bolts and expansion shields.

5.5.4 Small Power Outlets

Low voltage socket outlets for small power applications shall be fixed at a height of 300 mm from the finished floor level to the horizontal centre line of the switch.

Where recessed spur units control appliances such as incinerators, fans, water heaters, etc. a conduit shall be taken from the spur outlet box to an outlet box located immediately adjacent to the appliance in order to conceal the final connection to the appliances.

Wiring of spur units shall be carried out on 'ring' or 'radial' circuits as specified and shall conform to IEE Regulations.

5.5.5 Lighting Switches

Lighting switches of a single pole type shall be connected to the phase conductor. Switches shall be fixed at a height of 1410 mm from the finished floor level to the horizontal centre line of the switch. Where grouped switches are used, they shall be mounted in multi-gang boxes with plates.

All lighting switches shall be suitable for the power supply to which they are connected.

Lighting switches shall be mounted in separate boxes for separate circuits derived from different distribution boards.

Where multi-gang switches are supplied from opposite phases, phase barriers and warning labels shall be provided. Single gang switches connected to opposite phase polarity shall, in no case, be positioned less than 2 m apart.

5.5.6 Lighting Luminaries

The Contractor shall check final positions of all lighting points with the Engineer and obtain his approval before installation commences.

All lighting luminaries shall be mounted and located in such positions as to be readily accessible for maintenance purposes from ladders or steps.

Fixing and suspension plates shall be suitable for direct connection to conduit boxes or as otherwise specified. Luminaries having conduit suspensions shall be provided with earthed pattern ball and socket back plates. The rigid type of backplate will not be accepted. Tubular fluorescent luminaries shall have at least two separate fixings at the manufacturers recommended spacings.

5.5.7 Earthing and Bonding

The earthing system shall comply with Clause 67 of the Indian Electricity Rules.

All low voltage systems shall be properly and efficiently earthed in accordance with BS/IS 3043.

The Contractor shall ensure that complete earth continuity exists throughout the system and that the resistance of the earth parts complies with the IEE Regulations.

Each control room building shall have a main earth bar consisting of a hard drawn high conductivity copper bar of at least 150 x 25 x 6 mm, mounted on stand-off insulators. Connections to this bar shall be by brass bolts, flat washers, nuts and locknuts.

The system neutral, where applicable, earth bars of all switchboards and all earthing terminals of all transformers shall be securely bonded to the main earth bar. For bonding purposes, a galvanised iron earthing strip may be used, at least 25 x 6 mm in cross section.

Metal sheaths and armouring of all incoming, outgoing and interconnecting sub-station cables shall be securely bonded to the main earth bar. The sizes of bonding conductors shall be in accordance with IS 3043. Bonding conductors may be connected to the earth bar of the switchboard or other apparatus served.

All cables and conduits used throughout the installation shall be securely bonded to the associated equipment, and earthing straps shall be fitted. To facilitate such bonding, all cable glands shall be supplied with substantial armour clamps, having additional earthing lugs. Compression glands shall be fitted with earth tags and brass set screws.

Earthing terminals of every distribution board, isolator or switchgear item or other apparatus shall be securely bonded through 14 SWG copper conductor or 25 x 6 mm galvanised iron strip or by connecting the bonding conductors to the earth bar of the apparatus.

All electric motors and other items of electrical equipment within the Contract shall be bonded to earth by flexible copper cables, braids, or conductors of not less than 6mm2 equivalent size connected to the armouring of armoured cables unless stated otherwise.

All bonding of motors shall be to the stator frame of the motor. Bonding to end-shields, terminal boxes etc. is not acceptable.

Incoming gas, water, piped services and ducting shall be bonded in accordance with the requirements of IEE Regulation 413-2. The minimum size of the bonding conductor shall be 6mm2. Copper strip of green and yellow PVC insulated single core copper cables shall be used.

Earth clamps shall comply with IS 3043. In dry areas tinned brass clamps shall be installed. In areas where dampness is to be expected phosphor bronze clamps shall be used.

Where electrical components are mounted on custom built frames, each of the above earth bonds shall include the metalwork of the support structure.

Conduit or trunking shall not be used as the sole circuit protective conductor.

5.5.8 Earth Electrodes

Where connections to the mass of earth are specified for lightning protection or system earthing, the Contractor shall supply, install and test the connection in accordance with the following Clauses.

The Contractor shall, at the commencement of the Contract, carry out soil resistivity tests over the area of the Site indicated on the Drawings. A minimum of two tests of different spacings shall be carried out at each test location.

The results of these tests shall be used to determine the type and number of rods, plates or strips required.

The top end of rods shall be terminated at least 300 mm below finished ground level. Where rods are installed in areas accessible to persons or animals this depth shall be increased.

The position of earth rods shall be indicated by pre-cast concrete inspection pits.

Where multiple earth rods are installed, interconnections shall be made using bare galvanized iron strips. The strip shall be buried at a minimum of 600 mm below finished ground level.

The earth electrodes shall be connected to the main earth bar through test links. The earth electrode installation shall be tested in the presence of the Engineer when disconnected from the main system, using the method shown in Appendix 15 of the IEE Regulations.

Where the earth connection forms a link between a high voltage system and a low voltage system the earth connection resistance to earth when disconnected from the earth bar shall not exceed one ohm.

Where earth plates are required to carry a heavy system fault current these shall be buried at a depth of at least 2 m. Connection of copper tapes to earth plates shall be brazed and protected against corrosion.

Marker posts and plates shall be provided to mark the position of all electrodes and buried conductors.

5.5.9 Site Lighting

The installation shall be in accordance with layouts with exact positions of control equipment, poles and lighting points determined on site to the approval of the Engineer, prior to starting erection.

The equipment shall be supplied in new and unused condition, having been tested in the course of manufacture and stored in weatherproof accommodation on site.

The Contractor shall carry out all unloading, slinging, stacking, erection and fixing of poles and brackets in accordance with the manufacturer's instructions.

Excavation for poles shall not be by mechanical means unless agreed by the Engineer. The bottom portion of pole shall be fixed in a solid precast concrete block not less than 450 mm square for the full depth of the block. Final adjustment shall be carried out using aluminum or hardwood wedges and the remaining annulus packed with sand. A cable duct shall pass through the concrete block into the column cable entry. Precast blocks shall be supplied and installed by the Contractor. The cable entry slot shall be temporarily plugged to ensure that it is maintained free from material during the backfilling process. The block shall be bedded on a 100 mm thick concrete base.

Poles shall be erected in a truly vertical position. The Contractor shall be responsible, until the expiry of the Defect Liability Period for correcting the alignment of any column which he has erected which has departed from the vertical position, excepting where it is established that such departure is due to an event outside the control of the Contractor.

Poles shall have their lanterns fixed and aligned in accordance with the manufacturer's instructions to prevent rotation in service. All joints shall be resistant to the ingress of moisture into the column and lantern.

5.6 Test and Acceptance

Tests shall be carried out on site and witnessed by the Engineer or his representatives as follows for LV cables:-

(i) Insulation resistance at 500 V dc shall not be less than 0.5 mega ohm.

(ii) Earth continuity and earth resistance.

(iii) Phasing and polarity (every fuse and single pole control and protective device shall be connected in phase conductors only).

5.7 Measurement and Payment

Work shall be measured according to types as an all inclusive rate or as specified on the BOQ.

Government of Nepal
Ministry of Infrastructure Development
Department of Water Supply and Sewerage Management Office
Water Supply and Sewerage Management Office
Butwal, Rupandehi

Office Chief

6 PLUMBING

6.1 Scope

These Specifications cover the general requirements for plumbing services including fixing of pipes, fittings and sanitary appliances in buildings and general requirements external (outside buildings) water supply and sewerage works.

For the purpose of water supply arrangements inside buildings, the work can be considered as to start from ferrules and service pipes.

All the items under this group shall conform to the detailed Specifications given for each of the items, in addition to the bye-laws of the local bodies within whose jurisdiction the items are executed. Where the bye-laws of the local bodies differ from the detailed specification for an item, the bye-laws shall override these Specifications.

6.2 Interpretations

6.2.1 Supporting Specifications

The following specifications shall, inter alia, form part of and shall be read in conjunction with this specification:

a)	1	Item of General Application
b)	2.1	Site Clearance
c)	2.2	Earthworks
d)	2.3	Concrete Works
e)	2.4	Brickworks
f)	2.4	Cement Plaster Works

6.2.2 Application

This specification contains clauses that are generally applicable to plumbing and associated work.

6.2.3 Applicable codes

All materials used in the construction of any of the works or any of the appliances shall conform to the relevant Indian Standards where applicable. Where no such standards exit, the materials shall be of the quality and workmanship acceptable to Authority, and shall be open to inspection at the manufacturer's works before dispatch.

The following Indian Standard codes, unless otherwise specified herein, shall be applicable. In all cases, the latest revision of the codes shall be referred to:

IS:458	Concrete pipes (with and without reinforcement)
IS:651	Salt Glazed stoneware pipes and fittings
IS:771 (Part I to IV)	Glazed fireclay Sanitary appliances
IS:772	CI Sanitary Appliances
IS:774	Flushing Cisterns For W/C And Urinals
IS:775	CI Brackets And Supports For Wash Basins And Sinks
IS:778	Gunmetal Gate, Globe and Check valves for general purposes
IS:779	Water Meters (Domestic Type)
IS:781	Sand-cast brass screw down bib and stop taps for water services
IS:782	Caulking lead
IS:783	Code of practice for laying of concrete pipes
IS:784	Prestressed concrete pipes
IS:804	Rectangular prestressed steel tanks
IS:1200 (Part XVI)	Method of measurement for Building and Civil Engineering works - Laying of water, sewer lines including appurtenant items
IS:1239	Mild steel tubes, tubular and other wrought steel fittings
IS:1536	Centrifugally cast (spun) iron pressure pipes for water, gas and sewage
IS:1538 (Part I to XIII)	Cast Iron fittings for pressure pipes for water, gas and sewage
IS:1545	Solid drawn copper alloy tubes
IS:1700	Drinking fountains
IS:1703	Ball valves (horizontal plunzer type) including floats for water supply purposes
IS:1711	Method for simple torsion testing of steel wire
IS:1729	Nahani Trap

Government of Nepal
Ministry of Agriculture Development
Department of Water Supply and Sewerage Management
Water Supply and Sewerage Management Office
Butwal, Rupandehi

Office Chief

IS:1742	Code of practice for building drainage
IS:1795	Pillar Taps
IS:1916	Steel cylinder reinforced concrete pipes
IS:2064	Code of practice for selection, installation and maintenance of sanitary appliances
IS:2065	Code of Practice for Water Supply in buildings
IS:2104	Water meter boxes (domestic type)
IS:2326	Automatic Flushing Cisterns For Urinals
IS:2379	Color code for identification of pipe lines
IS:2401	Code of practice for selection, installation and maintenance of domestic water meters
IS:2470	Code of practice for design and construction of septic tanks
IS:2548	Plastic water closet seats and covers
IS:2556 (Part I to XV)	Vitreous sanitary appliances
IS:2692	Ferrules for water services
IS:3076	LDPE pipes for Potable Water Supplies
IS:3114	Code of practice for laying of cast iron pipes
IS:3438	Silvered glass mirror for general purpose
IS:3589	Electrically welded steel pipes for water, gas and sewage (200 to 2000 mm nominal diameter)
IS:3950	Surface boxes for sluice valves
IS:4111	Code of practice for ancillary structures in sewerage system
IS:4127	Code of practice for laying of Glazed stoneware pipes
IS:4827	Tower Rail
IS:5329	Code of practice for sanitary pipe work above ground for buildings
IS:5455	Cast Iron steps for manholes
IS:5822	Code of practice for laying of welded steel pipes for water supply
IS:6295	Code of practice for water supply and drainage in high altitudes and or sub-zero temperature regions
IS:7231	Plastic Flushing Cisterns For W/C And Urinals
IS:10067	Material constants in building works

Other IS codes not specifically mentioned herein but pertaining to the work of internal water supply form part of these Specifications.

6.3 General Requirements

The following general requirements are applicable, though these are not explicitly specified / stated in the Drawings or designs given by the Engineer.

All work shall be done with skilled workmen experienced in the trade. All water supply installation work shall be carried through licensed plumbers.

All work shall be adequately protected, to the satisfaction of the Engineer, so that the whole work is free from damage throughout the period of construction upto the time of handing over.

No work shall be covered without the approval of the Engineer.

The Contractor shall be responsible for coordinating this work with works of other trades sufficiently ahead of time to avoid unnecessary hold-ups. Hangers, sleeves, recesses etc., shall be left in time as the work proceeds.

The Contractor shall submit as directed by the Engineer, samples, shop Drawings, manufacturer's Drawings, equipment characteristics and capacity data etc., of all equipment, accessories, devices etc., that he proposes to use in the installation, to the Engineer for approval.

Any damage caused to the building or to electric, sanitary, water supply or other installations etc., therein either due to negligence on the part of the Contractor, or due to actual requirements of the work, shall be made good and the building or the installations shall be restored to its original condition by the Contractor.

It is most important to ensure that the wholesome water supply provided for drinking and culinary purposes, is in no way liable to contamination from any less satisfactory water. There shall, therefore, be no cross connection whatsoever between a pipe or fitting for conveying or containing wholesome water and a pipe or fitting for conveying or containing

impure water or water liable to contamination or of uncertain quality, or water which has been used for any purpose. The provision of reflux or non-return valves or closed and sealed valves shall not be construed a permissible substitute for complete absence of cross-connection.

No piping shall be laid or fixed so as to pass into, through or adjoining any sewer, scour outlet or drain or any manhole connected therewith nor through any ashpit or manure-pit or any material of such nature that would be likely to cause undue deterioration of the pipe, except as permitted in the next Clause.

Where the laying of any pipe through fouled or corrosive soil or pervious material is unavoidable, the piping shall be properly protected from contact with such soil or material by being carried through an exterior cast iron tube or by some other suitable means approved by the Engineer. Any piping or fitting laid or fixed, which does not comply with the above requirements, shall be removed and relaid in conformity with the above requirements and to the satisfaction of the Engineer.

Where lines are to be laid in close proximity to electric cables or in corrosive soils, adequate precautions should be taken to avoid electrical accidents and corrosion.

To reduce the frictional losses, piping shall be as smooth as possible inside. Methods of jointing shall be such as to avoid internal roughness and projection at the joints, whether of the jointing material or otherwise.

Change in diameter and in direction shall preferably be gradual rather than abrupt to avoid undue loss of head. No bend or curve in piping shall be made which is likely to materially diminish or alter the cross-section.

All pipe work shall be so laid or fixed, and maintained as to be and to remain completely watertight, thereby avoiding waste of water, damage to property and the risk of contamination of the water conveyed.

Underground piping shall be laid at such a depth that it is unlikely to be damaged by frost or traffic loads and vibrations. It shall not be laid in ground liable to subsidence, but where such ground cannot be avoided, special precautions shall be taken to avoid damage to the piping. Where piping has to be laid across recently disturbed ground, the ground shall be thoroughly consolidated so as to provide a continuous and even support.

The bottom of water service pipe, at all points, shall be at least 30 cm above the top of the sewer line at its highest point.

Water for drinking or for culinary purposes as far as possible shall be on branch pipes connected directly to the service.

In flats and tenements supplied by a common service pipe a stop tap shall be fixed to control the branch each separately occupied part. In large buildings a sufficient number of stop valves shall be fixed on branch pipes, and to control groups or ball valves and draw off taps, so as to minimize interruption of the supply during repairs, all such stop valves shall be fixed in accessible positions and properly protected from being tampered with, they may be of the gate type to minimize loss of head of friction.

Where the service pipe is of diameter less than 50 mm the stop valves shall be of the screw down type and shall have loose washer plates to act as non-return valves. Other stop valves in the service line may be of the gate type.

Service pipes shall be so constructed as to avoid air-locks, so that all piping and fittings above ground can be completely emptied of water to facilitate repairs. There shall be draining taps or draw-off taps (not underground) at the lowest points, from which the piping shall rise continuously to draw-off taps, ball valves, cisterns, or vents (where provided at the high points).

Piping shall be confined, as far as possible, to rooms where appliances are fixed, it shall have easy bends, and where quietness is particularly desired, holder bats or clamps shall be insulated from the piping by suitable pads.

The rising pipe to the storage cistern, if any, of any feed cistern shall be taken as directly as possible to the cistern and shall be fixed away from windows or ventilators.

Piping shall not be buried in walls or solid floors. Where unavoidable, piping may be buried for short distance provided that adequate protection is given against damage and that no joints are buried. If piping is laid in ducts or chases, these shall be roomy enough to facilitate repairs and shall be so constructed as to prevent the entry of vermin. To facilitate removal of pipe casing, floor boards covering piping shall be fixed with screws or bolts.

When it is necessary for a pipe to pass through a wall or floor, sleeves shall be fixed therein for reception of the pipe and to allow freedom for expansion and contraction and other movement. Piping laid in wooden floors shall, where possible, be parallel with the joist.

Where storage tanks are provided to meet over all requirements of water, connection of service pipe with any distributing pipe shall not be permitted except one direct connection for culinary or drinking requirements.

No service pipe shall be connected to any water closet or urinal. All such supplies shall be from flushing cisterns which shall be supplied form storage tank.

No service or supply pipe shall be connected directly to any hot water system or to any apparatus used for heating other than through a feed cistern thereof.

The service pipe shall pass into or beneath the building at a depth below the external ground level of not less than 0.75 m (provided the foundation is deeper than 0.75 m) and at its point of entry through the structure, it should be accommodated in a sleeve which should have previously been solidly built in. The space between the pipe and the sleeve shall be filled with bituminous or other suitable material for a minimum length of 15 cm at both ends.

6.4 Pipes and fittings

In order to supply water inside and premises of the building, piping arrangements of Galvanized Iron (GI) pipes, medium class, conforming to IS: 1239, shall be used. For sewerage works uPVC or Reinforced Cement Concrete (RCC) pipes shall be used as specified. Specifications for laying of these pipes are given in Clauses 3 .

6.5 Material, fittings, appliances and structures for water supply

6.5.1 General

All pipes, fittings and appliances shall be free from cracks and other flaws before fixing and shall be undamaged in all respects during and after fixing. Any damages shall have to be rectified satisfactorily.

All the pipes, fittings and appliances shall be thoroughly cleaned before fixing and particular care shall be taken to see that no extraneous material gets into them during fixing. All items required for ensuring leak proof jointing and efficient functioning of the pipes and appliances shall be carried out without extra claim. The pipes shall be carefully cleared of all foreign matter before being laid. They shall be thoroughly brushed out internally with a well-fitting hard brush, and after laying the open end shall be temporarily plugged to prevent ingress of water, soil etc., precaution shall be taken to prevent floatation of the plugged pipes.

All cutting and waste of pipes involved in fitting them shall be included in the rate.

All diameters of pipes shall be the diameters of the inside bore. All the pipes, appliances, fixtures and all other materials to be used shall be new and of good quality. Pipes and fittings

6.5.2 Fixtures and Appliances

6.5.2.1 Brass or Gunmetal water fittings

All brass or gunmetal fittings shall be of heavy quality and of approved manufacture and pattern. The fittings shall conform to IS: 778 and IS: 781. A sample of fittings shall be got approved by the Engineer and all fittings shall be provided according to the approved samples.

The standard size of bronze or gun metal fittings shall be designated by the nominal bore of the pipe outlet to which the fittings are attached. A sample of each kind of fittings shall be got approved from the Engineer and all supplies made according to the approved samples.

All cast fittings shall be sound and free from laps, blow holes and pittings. Both internal and external surfaces shall be clean, smooth and free from sand etc. Burning, plugging stopping or patching of the casting shall not be permissible. The bodies, bonnet, spindles and other parts shall be truly machined so that when assembled the parts shall be axial, parallel and cylindrical with surfaces smoothly finished. The area of the water way of the fittings shall not be less than the area of the nominal bore. Chromium plating wherever specified shall be of 0.3 micron thick, conforming to IS:4827. The chromium shall never be deposited on brass unless a heavy coating of nickel is interposed. In the case of iron fittings, a thick coat of copper shall first be applied, then one coat of nickel and finally the coat of chromium shall be applied. In finish and appearance the plated article, when inspected, shall be free from plating defects such as blisters, pits, roughness and unplated areas and shall not be stained or discoloured. Before fitting is plated the washer plate shall be removed from the fittings, the gland packing shall be protected from the plating solution.

6.5.2.2 Bib cock (tap)s and stop cock (tap)

Bib cock and stop cock shall be of specified size and shall be of screw down type and shall conform to IS 781. The handle shall be either crutch or butterfly type, securely fixed to the spindle. Valve shall be of the loose leather seated pattern. The cocks (taps) shall open in anti-clockwise direction.

The bib cock and stop cock shall be polished bright. The minimum finished weights of bib tap and stop tap shall be as specified in the following table:

Size (mm)	Minimum finished weight	
	Bib tap (kg)	Stop tap (kg)
8	0.25	0.25
10	0.30	0.35

15	0.40	0.40
20	0.75	0.75

6.5.2.3 Screw Down Wheeled Stop Tap

The item shall conform to the Specifications covered in Clause 6.5.2.2 in all respects except that it shall have an operating wheel. The material of the wheeled stop valve shall be gun metal or brass as specified in the item.

6.5.2.4 Self closing taps and other special fittings

Self closing taps and other special fittings of approved makes are to be used on direct pipes and distributing pipes from tanks. Self-closing taps shall be of non-concussion type and shall comply with IS: 1711.

6.5.2.5 Valves for Plumbing

6.5.2.5.1 Wheel Valves (Globe valves)

The wheel valves shall be of size as specified and conforming to IS: 778 (Globe Valves).

6.5.2.5.2 Gate Valves

The gate valve shall be of size as specified and conforming to IS: 778.

6.5.2.5.3 Non-Return valve (Brass)

The valves shall be of quality approved by the Engineer and shall generally conform to IS: 778. Weights of these valves shall be as prescribed in the following table with a tolerance of 5 percent.

Diameter (mm)	Weight (kg)	
	Horizontal type	Vertical type
15	0.30	0.25
20	0.55	0.25
25	0.90	0.75

6.5.2.5.4 Non-Return valve (Gunmetal)

The valves shall be of quality approved by the Engineer and shall generally conform to IS: 778.

6.5.2.5.5 Float / Ball valves

The float valves or ball valves shall be of specified size as per Specification conforming to IS: 1703. The valve shall be of Brass or Gunmetal of specified size conforming to IS: 1703. The valve shall be of following two classes:

- High Pressure (HP) for use on mains having pressure of 1.75 kg/cm^2 and above. These shall remain closed at a test pressure of 10.5 kg/cm2.
- Low Pressure (LP) for use on mains having a pressure up to 1.75 kg/cm^2. These shall remain closed at a test pressure of 3.5 kg/cm2.

The ball valves shall be of the nominal sizes 15 mm, 20 mm and 25 mm. The nominal size shall correspond with the nominal bore of the inlet shanks. Polyethylene floats shall conform to IS 9762. These valves shall be of the following dimensions and weights:

Sr. No.	Item	Nominal Size of valve (mm)		
		15	20	25
1.	Diameter of Spherical float (mm) High pressure Low pressure	 127 114	 152 127	 203 178
2.	Minimum weight of ball valve including back nut, body and piston	283	446	823

6.5.2.5.6 Landing Valves

Landing valves shall be of the specified size and class and shall in all respects conform to the requirements of IS: 5290, type B.

Government of Nepal
Ministry of Infrastructure Development
Department of Water Supply and Sewerage Management Office
Office Chief

6.5.2.5.7 Full Way Valve (Brass)

The valve shall be of brass fitted with a cast iron wheel and shall be of gate valve type conforming to IS:780, opening full way and of the size as specified. The valve shall be of best quality as approved by the Engineer.

6.5.3 Water Storage tanks on terraces

These tanks shall of HDPE circular in shape of required capacity and shall be as per approved by the Engineer and as per drawing Drawings.

For inlet, outlet and other connections fully threaded GI connections with hexagonal check nuts and washers on either side of the tank wall shall be provided. Holes for threaded connections shall be drilled and not punched. Pipes entering / leaving the tank shall be provided with unions and suitably supported on a firm basis to avoid damage to the tank walls. No separate payment shall be done for fixing of inlet, outlet, washout arrangement and associate work.

6.5.4 Underground Water Storage Tanks

Underground Storage tanks shall be of RCC, as per the Specifications given for RCC storage tanks The following requirements shall also be complied with:

- The tank shall project at least 30 cm above the highest flood level. Where this is not possible the manhole cover shall be raised 30 cm above the highest flood level of the locality or ground level whichever is higher.
- The construction of the tank shall be such as to provide for the draining of the tank when necessary and water shall not be allowed to collect round about the tank.
- The tank shall be perfectly watertight.
- The inner surface of the tank shall be rendered smooth as far as possible.
- The top of the tank shall be so leveled as to prevent accumulation of water thereon.
- The tank shall have complete cement concrete cover leaving a manhole opening provided with a properly fitting mosquito-proof hinged cast iron cover fitted with a leak proof cast iron frame. Where tank is of a large size, adequate number of manholes shall be provided.
- No gap shall be allowed to remain round the suction pipe and arrangement shall be provided for proper discharge of spill water from the electric pump by connecting the pump cabin to the water drain, or by providing a small hole which will enable the water to flow out

The overflow pipes or vent shafts, if provided, shall have a wire gauge cover of 1.5 mm mesh properly screwed tightly to the opening.

6.5.5 Fittings and accessories for RCC Water Reservoirs

Where necessary, the pipes etc., shall be embedded during the casting of concrete. Where not so necessary in the opinion of the Engineer, holes may be left while casting of the concrete and the accessories fixed later. All these holes shall be made good and waterproofed after fixing of the accessories. The frame of the manhole shall be embedded into the concrete while casting.

The following fittings and accessories are included under this item as given elsewhere:

- Ball cock of the diameter of the supply pipe.
- Galvanized iron overflow pipe with mosquito proof coupling.
- Required number of 45 cm diameter manholes with cover and frame,
- Connecting galvanised iron pipes,
- 45 cm wide mild steel ladder of 40 mm x 6 mm mild steel flat stringers and stops of 20 mm diameter mild steel bars,

The intake and outtake pipes shall be as provided separately and shall not be included in this item.

6.6 Sanitary fittings and appliances

6.6.1 General

All porcelain sanitary ware shall be of approved make. All fittings shall be of first quality, free from warps, cracks and glazing defects. All sanitary ware, fittings and fixtures shall be as shown in Drawings and as described in detail in Bill of Quantities.

6.6.2 Protection

Fixtures shall be protected throughout the progress of the work from damage. Special care shall be taken to prevent damage and scratching of chromium plated fittings. Tool marks on chromium fixtures etc., shall not be accepted.

All fixtures shall be fixed with chromium plated brass screws with washers wherever necessary. Protective paper on fixtures shall be removed with hot water only at the final completion of work.

Office Chief

Government of Nepal
Ministry of Urban Development
Department of Water Supply and Sewerage Management Office
Butwal, Rupandehi

6.6.3 Workmanship

All sanitary ware shall be fixed in a neat workmanlike manner, true to level and plumb. Manufacturer's instructions shall be followed closely regarding installation and commissioning.

6.6.4 Testing

When the installation has been completed to the satisfaction of the Engineer, it shall be tested in the following manner:

- The entire system shall be slowly filled with water, allowing any trapped air to escape.
- When all outlets are closed the system shall be checked for water tightness.
- Each outlet shall then be checked for rate of flow and correct operations.

6.6.5 Bath, Lavatory and Mixing Taps

Bath, lavatory and mixing taps shall generally comply with the requirements specified for bib taps in Clause 6.5.2.2. Combination taps, mixing valves or blenders shall conform to IS : 1701. For mixing hot and cold water and discharging the mixture through a single outlet shall be fed with both hot water and cold water under pressure only from cisterns at the same level or from the same cistern.

6.6.6 Wash basins

The item pertains to the provision and fixing of wash basin of the specified size including all necessary fixtures and pipe connections upto the outside face of the wall.

The basin shall be fixed and supported on a pair of rolled steel or cast iron cantilever brackets embedded in wall or fixed to wall with wooden cleats and screws. The height of the top of the basin from the floor shall be 75 cm unless other heights are ordered by the Engineer. All the pipe connections shall be made as shown on the plan or as found necessary and ordered by the Engineer for the item. Chromium plated brass screw down stop tap shall be fixed on the supply pipe. The pipe connections shall conform to IS: 1742. The waste pipe shall be provided with a C.P. Brass bottle trap. All the exposed pipes and brackets shall be painted with one coat of red lead and two coats of good oil paint of approved shade.

Wash basins shall be of white vitreous china conforming to IS: 2556 (Part -I) and IS: 2556 (Part IV). Wash basins either of flat back or angle back as specified shall be of one piece construction, including a combined over-flow. All internal angles shall be designed so as to facilitate cleaning. Each basin shall have a rim on all sides, except sides in contact with the walls and shall have a skirting at the back. Basins shall be provided with single or double tap holes as specified. The tap holes shall be 28 mm square or 30 mm round or 25 mm round for pop up hole. A suitable tap hole button shall be supplied if one tap hole is not required in installation. Each basin shall have circular waste hole to which the interior of basin shall drain. The waste hole shall be either rebated or bevelled internally with 65 mm diameter at top. Each basin shall be provided with non-ferrous 32 mm waste fitting. Stud slots to receive the brackets on the underside of the wash basin shall be suitable for a bracket with stud not exceeding 13 mm diameter, 5 mm high and 305 mm from the back of basin to the centre of the stud. The stud slots shall be of depth sufficient to take 5 mm stud. Every basin shall have an integral soap holder recess or recesses, which shall fully drain into the bowl. A slot type of overflow having an area of not less than 5 cm^2 shall be provided and shall be so designed as to facilitate cleaning of the overflow.

Wash basins shall be enumerated. Rate shall include the cost of all the materials and labour involved in all the operations described above.

6.6.7 Mirror

The mirror shall be of superior sheet glass with edges rounded off or bevelled, as specified. It shall be uniformly silver plated at the back and shall be free from silvering defects and with marine plywood back. Mirror shall conform to the Specifications of IS:3438.

Mirror shall be fixed in position by means of 4 Chromium Plated (C.P) brass screws and C.P brass washers, over rubber washers and wooden plugs firmly embedded in walls. C.P brass clamps with C.P brass screws may be an alternative method of fixing, where so directed. Unless specified otherwise the longer side shall be fixed horizontally.

The item, if measured separately, will be by number. It may be included in other items it so specified in BOQ.

6.6.8 Sink

Kitchen sink shall be provided at the location shown in the Drawing and as per the size mentioned.

Kitchen sink shall be of white glazed fire clay conforming to IS 771 (part II) and shall have combined overflow of weir type and their inverts shall be 30 mm below the top edge. Each sink shall be provided with a non-ferrous 50 mm diameter waste fitting. The waste fitting shall be of brass with chromium plated (CP).

The sink shall be provided with 40 mm CP brass union. CI brackets for supporting sink shall conform to IS:775. Installation of sink shall consist of assembly of sink C.I brackets, union and GI waste pipe. The sink shall be supported on CI cantilever brackets, embedded in cement concrete (1:2:4) block of size 100 X 75 X 150 mm. Brackets shall be fixed in position before the dado work is done. The CP brass union shall be connected to 40 mm nominal bore GI waste pipe which shall discharge into a floor trap. The height of front edge of sink from the floor level shall be 80 cm. This item shall be measured by number including all items stated above and shall include cost of all fixing material.

Sinks shall be enumerated. Rate shall include the cost of all the materials (bottle trap, waste pipe, washers, CI brackets, unions, other fittings and etc) and labour involved in all the operations described above.

6.6.9 Floor Trap

Floor Traps shall be of CI and self cleaning and deep water seal type with a 50 mm water seal. It shall have a 100 mm diameter grating. These shall be fixed in cement concrete blocks 1:2:4, to the required level and position. The gratings shall be got approved before use in work.

6.6.10 Water closet

6.6.10.1 Orissa Pattern Water Closet

Squatting pans shall be of white vitreous china conforming to IS: 2556 (Part-I) for general requirements and IS: 2556 (Part-III) for Orissa pattern water closet

This item pertains to provision and fixing of Orissa type white glazed earthenware Water Closet pan of specified dimensions with cast iron high level flushing cistern of 12.5 litres capacity, and other accessories and necessary pipe connections upto the soil and vent pipes fixed on the outside of walls.

Each pan shall have an integral flushing rim of suitable type. It shall also have art inlet or supply horn for connecting the flush pipes. The flushing rim and inlet shall be of the self draining type. It shall have weep hole at the flushing inlet to the pan. The flushing inlet shall be in the front unless otherwise specified or ordered by the Engineer The inside of the bottom of the pan shall have sufficient slope from the front towards the outlet and the surface shall be uniform and smooth to enable easy and quick disposal while flushing. The exterior surface of the outlet below the flange shall be an unglazed surface which shall have grooves at right angles to the axis of the outlet. In all cases a pan shall be provided with a (100 mm) S.C.I. trap with 'P' or 'S' type with approximately 50 mm water seal and 50 mm diameter vent horn, where required by the Engineer.

The pan shall be placed into position with the trap joined in cement mortar 1:1 and the connecting pipes duly connected including the lead pipe from the flushing cistern. The jointing of various pipes shall conform to IS: 1742.

The jointing of cast iron pipes shall be with 1:1 cement mortar with hemp yarn caulking.

The pan shall be sunk into the floor and embedded in a cushion of average 15 cm thick cement concrete 1:5:10 (1 cement : 5 fine and : 10 graded brick ballast 40 mm nominal size). The concrete shall be left 115 mm below the top level of the pan so and to allow flooring and its bed concrete. The joint between the pan and the trap shall be made leak proof with cement mortar 1:1 (1 cement : 1 fine sand). The pan shall be fixed slightly at a lower level than the level of the general flooring, which should slope on all sides towards the pan. If the pan is damaged in handling or fixing, it shall be replaced by the Contractor at his own expenses.

The flushing cistern shall be fixed on two iron or mild steel cantilever brackets fixed in the wall at the height indicated on the Drawing or as ordered by the Engineer. The inlet end shall be connected to the distribution pipe through a stop tap, pipe and bends. The lead flushing pipe shall be connected to the outlet nipple and tail pipe with a coupling brass nut. The 20 mm diameter overflow pipe shall be slightly bent downwards and shall be fixed with a mosquito proof coupling.

The C.P. flushing pipe shall be bent leaving a straight length of about 30 cm at the top and the lower portion after the bend shall be housed into the recess cut in the wall and shall be concealed with plaster.

The whole installation shall be tested for leak proof joints and satisfactory functioning.

The cistern, brackets and all the exposed pipes shall be painted with a base coat of red lead oil paint and the two coats of approved shade of good oil paint.

6.6.10.2 European type white glazed earthenware water-closet

The item pertains to the provision and fixing of European type white glazed earthenware water-closet pan, with 12.5 liters white steel enameled low level flushing cistern and other flushing accessories and necessary pipe connections up to the soil and vent pipes fixed on the outside of the wall. The pan shall be fixed into position in 1:1 cement mortar with the connecting pipes duly connected including the flushing cistern, piping etc., and the test shall be done as in previous Clause. The seat and lid shall be fixed to the pan with chromium plated brass hinges.

Government of Nepal
Ministry of Infrastructure Development
Department of Water Supply and Sewerage Management
Water Supply and Sewerage Management Office
Butwal, Rupandehi

Office Chief

6.6.10.3 Measurement

Water closets shall be enumerated. Rate shall include the cost of all the materials and labour involved in all the operations described above.

6.6.11 Urinals

6.6.11.1 Half stall Urinals

The item pertains to the provision and fixing of a half stall type urinal with 10 litre auto flushing cistern (or any other type as defined in the BOQ) including all fittings and soil pipe connections upto the outside face of the wall. The installation of the urinal shall conform to paragraph 6.6 of IS 2064.

The urinal shall be securely fixed to the wall with the top of the bowl at 65 cm., from the floor or such distance as may be directed by the Engineer. All the pipe connections shall be made as shown on the Drawings or as necessary for the item.

The jointing shall confirm to paragraph 5 of IS: 1742. A 32 mm diameter GI pipe shall be provided with C.P. bottle trap.

The flushing cistern, its fixing and the pipe connections shall conform to the details given in Clause 6.6.10 above. All the exposed lead and ferrous pipes and the bracket for the flushing cistern shall be painted with one coat of red lead and two coats of good anti-corrosive oil paint of approved shade.

Half stall urinals shall be of white vitreous china conforming to IS 2556 (Part VI Sec 2). They shall be of one piece construction with or without an integral flushing box rim provided with slots or alternative fixing arrangement at the flat back end. They shall be provided with ridges where integral flushing is not provided in the sides of the interior of the bowl, to divert the water towards the front line of the urinal where integral flushing box rim is specified, water spreaders provided shall conform to IS:2556 Part VI: Sec 6. These shall be vitreous china of one piece construction with one integral flush inlet.

6.6.11.2 Squatting Plate Urinal

The Squatting Plate Urinal shall be of vitreous china conforming to IS 2556 (Part I) and IS 2556 (Part VI / Sec 3) with internal flushing rim with front or side inlet. Squatting plate shall be of one piece construction. Each urinal shall have integral longitudinal flushing pipe of suitable type which may be connected to flush pipe. There shall be 100 mm diameter white glazed vitreous china channel with stop and outlet piece in front.

6.6.11.3 Measurement

Urinals shall be enumerated. Rate shall include the cost of all the materials and labour involved in all the operations described above.

6.6.12 Toilet Requisites

6.6.12.1 Towel Rail

It shall be of anodised aluminum with two aluminum anodised brackets. The size of the rail shall be 75 cm x 20 mm diameter or 60 cm x 20 mm diameter, 1.25 mm thick as specified. The bracket shall be fixed by means of CP 1 brass screws to wooden cleats firmly embedded in wall.

6.6.12.2 Toilet paper holder

The toilet paper holder shall be of CP brass or vitreous china as specified and of size and design as approved by the Engineer-in charge. It shall be fixed in position by means of CP brass screws and plugs embedded in the wall.

6.6.12.3 Shower

These shall be of CP finish swivel type as specified.

6.6.12.4 Towel pipe and towel cloth stand etc.

These shall be of CP / anodized aluminum as specified. These shall be fixed by means of CP brass screws to wooden cleats firmly embedded in the wall.

6.6.12.5 Measurement

All the items mentioned above under Clause 'Toilet Requisites' shall be measured per number and the quoted rates shall be on this basis which shall include the cost of respective materials, necessary fixtures, fixing in position.

6.6.13 Water Heaters

These shall be of best approved make, type and capacity as per BOQ. They shall be mounted on the wall / lift with necessary bolts of approved type. They shall have a 8 mm PVC inlet pipe, 12 mm lead pipe outlet and 15 mm non-return valve.

These shall be measured per number basis and the quoted rates shall include:

- Cost of water heater with all the built-in electrical accessories like pilot lamp, thermostat, standard length of cable and three pin plug,
- PVC inlet lead outlet pipe and non-return valve,
- Fixing accessories like bolts, nuts etc.

6.6.14 Soil, Water and Vent Pipes

Unless otherwise mentioned in BOQ, soil, water and vent pipes shall be of Cast Iron conforming to IS: 1729 or IS:3989. Pipes and fittings with irregular bore, blow holes and other manufacturing defects shall not be allowed to be used for work. All the fittings shall be of the degree specified or as required at site.

6.6.14.1 Cast Iron Rain Water Pipes

Cast Iron pipes shall be treated with Dr. Angus Smith's solution before use. Cast Iron grating shall be of a slightly bigger diameter than that of the pipe.

In the case of terraced roof, the cast iron grating shall be fixed at the inlet end of the pipes properly secured in the parapet wall to receive the rain water. The cast iron grating shall be recessed at a slightly lower level than the adjacent terrace floor.

The joints shall be sealed with a few turns of spun yarn soaked in bitumen or tar. It shall be pressed home with a caulking tool for 1/3rd the depth of the joint. More skein yarn shall be wrapped if necessary and well rammed home. The joint shall then be filled with cement mortar 1:3. At the ground level, they shall be supported on a 1:2:4 cement concrete block of 30 cm x 30 cm and of sufficient height.

All the necessary fittings shall be included in the pipeline at proper places. The inlet end shall be carefully fixed to admit water from the roof. The outlet shall be with a shoe.

The pipe shall be painted with one coat of red lead oil paint and two coats of good anticorrosive oil paint of approved shade.

Pipes, fittings and joints shall be tested for leakage, any defects noticed shall be rectified without any extra cost to the corporation.

6.6.14.2 Cast Iron Soil Vent Pipes

Cast iron pipes of specified diameter shall have sockets for underground and sockets with lugs for fixing on walls. They shall be treated with Dr. Angus Smith's solution. All the pipes, fittings, etc., should be free from cracks and flaws. The interior of the pipes and fittings shall be clean and smooth. All the fittings shall be of the same quality as that of the pipes. The fittings shall have cleaning eyes with plugs where necessary.

The socket end shall be the inlet end for the soil or waste pipes. In vent pipes the socket shall face up. The joints shall be filled with lead. The joining shall conform to IS: 1742. Where the cast iron pipes are fixed on the wall they shall be supported on a 1:2:4 cement block of 30x30 cm and of sufficient height in the ground. The pipes shall be fixed on the wall with nails driven through the lugs to the holder battens. Necessary fittings shall be included in the pipes. The exposed pipes shall be painted with a base coat of red lead and two coats of good anti corrosive oil paint of approved shade. For pipes fixed on the walls, smoke test shall be carried out.

6.6.15 Gully traps

Gully traps shall be of salt glazed stoneware conforming to IS 651. Each gully trap shall have one CI grating of square size corresponding to the dimensions of inlet of gully trap. It will also have a water tight CI cover with frame inside dimensions 300x300 mm the cover weighing not less than 4.50 kg and the frame not less than 2.70 kg. The grating cover and the frame shall be of sound and good casting and shall have truly square machined seating faces. These shall be housed in masonry chambers of 300 mm x 300 mm internal size.

The masonry chambers shall be constructed in first class bricks in cement mortar 1:5 with a 10 cm brick work round the gully trap from the top of the bed concrete upto ground level. The space between the chamber walls and the gully trap shall be filled with cement concrete 1:5:10. It shall be plastered with cement mortar 1:3 finished with a floating coat of neat cement.

CI cover with frame shall be fixed on the top of brick masonry with cement concrete 1:2:4 and rendered smooth. Cement concrete in bed shall be 10 cm thick and in 1:5:10 mix (40 mm nominal size stone aggregate), projecting 7.5 cm outside the chamber walls.

6.6.16 Cast iron Nahani trap

Nahani trap shall be P or S type with minimum 50 mm seal. However if the plumbing is in two pipe system and with a gully trap at the ground level the minimum water seal shall be 35 mm. The traps shall be of self cleansing design and shall have exit of same size as that of waste pipe. These shall conform to IS 1729.

Government of Nepal
Ministry of Infrastructure Development
Department of Water Supply and Sewerage Management Office
Water Supply and Sewerage Management Office
Butwal, Rupandehi

Office Chief

7 FILTRATION MEDIA

7.1 Scope

This specification covers the requirements for filter sand and for gravel used in filtration of water.

7.2 Terminology

For the purpose of this standard, the following definitions shall apply.

Effective Size (E. S.) - Particle diameter corresponding to 10 percent finer on the grain size curve [determined according to IS: 2720 (Part IV)-1975].

Uniformity Coefficient - The ratio D60/D10 where D60 is the particle diameter corresponding to 60 percent finer on the grain size curve, and D10 is the particle diameter corresponding to 10 percent finer on the grain size curve.

7.3 Filter Sand

7.3.1 Quality Requirements

Filter sand shall consist of hard, durable grains of silica and shall have a specific gravity of not less than 2.5. All grains of sand shall preferably be water worn.

The minimum silica content in sand as determined by method given in 7 of IS: 2000-1962 shall be 90 percent.

Any sample of filter sand shall not contain more than 5 percent by volume of impurities, such as clay, loam, silt, etc, in one hour settlement after shaking in water in accordance with procedure described in Appendix A of the IS 8419 (Part 1) 1977.

Sand for Slow Sand Filter

It should be hard, rounded grains and free from clay, fine particles, soft grains and dirt. Any sample of filter sand shall not contain more than 5 percent by volume of impurities, such as clay, loam, silt, etc, in one hour settlement after shaking a 1000 ml calibrated measuring cylinder half filled with filter sand to be tested and add filled with water until up to three-fourths of the cylinder. Ignition loss should not exceed 0.7% by weight. The specific gravity should be in the range of 2.55 to2.65.Its silica content should be 90% or higher. Acid loss in hydrochloric acid should not exceed 5% by weight in 24 hours. Wearing loss should not exceed 3%.Effective size (d10) shall be between 0.15-0.35 mm. The uniformity coefficient (d60/d10) should be preferably between 2 to 3.5 and shall not exceed 5.

The sand shall not contain more than 5 percent of acid soluble matter as determined by solubility test described in Appendix B of IS 8419 (Part 1) 1977.

The loss on ignition, which is a measure of the organic matter present in sand, and determined by the procedure given in Appendix C of IS 8419 (Part 1) 1977 and shall not be more than 0.7 percent.

7.3.2 Grain Shape, Shape Variation and Sampling

The Grain Shape, Shape Variation and sampling of the sand shall be according to IS 8419 (Part 1) 1977.

7.4 Filter Gravel

7.4.1 Quality Requirements

Filter gravel shall consist of hard, preferably rounded stones with an average specific gravity of not less than 2.5 and shall be free from clay, sand, loam and organic impurities of any kind.

The gravel shall contain no more than 2 percent by mass of thin, flat or elongated pieces (in which the largest dimension exceeds three times the smallest dimension) determined by hand picking.

Gravel should be free from excessive amount of limestone or shells and acid solubility determined in accordance with procedure given in Appendix B of the of IS 8419 (Part 1) 1977 and should not exceed the following limits:

a) For gravel sizes 10 mm or larger 10 percent solubility

b) For sizes smaller than 10 mm 5 percent solubility

7.4.2 Sampling

Sampling and criteria for conformity for gravel shall be in accordance with 4.2.1 to 4.2.4 of the of IS 8419 (Part 1) 1977.

Government of Nepal
Ministry of Urban Development
Department of Water Supply and Sewerage Management Office
Butwal, Rupandehi

Office Chief

8 SLOW / RAPID SAND FILTERS AND ACCESSORIES

8.1 Slow Sand Filter

Filter Beds of RCC open to sky shall be provided for a maximum capacity of 6.1MLD. All filters shall be identical in internal dimensions.

Filtration shall be by gravity, through a bed of filter sand supported by layers of suitably graded filter gravel on. The filter sand shall consist of hard durable grains of silica and shall have a specific gravity of not less than 2.6. All grains of sand shall preferably be water worn. The filter gravel shall consist of hard, preferably rounded stones with an average specific gravity not less than 2.6, shall be free from clay, sand, loam and organic impurities of any kind and shall be such as to ensure adequate and uniform distribution of wash water and air after leaving the orifices with the minimum risk of mixing sand with the gravel of the supporting media.

The filter media (sand and gravel) shall conform to IS: 8419 (part I) amended up to date filter sand when immersed in 40% hydrochloric acid for 24 hours, the soluble matter shall not be more than 5% by weight. Any sample of filter sand shall not contain more than 5 percent by volume of impurities, such as clay, loam, silt, etc, in one hour settlement after shaking in water in accordance with procedure described. [Fill a 1000 ml calibrated measuring cylinder with filter sand to be tested to half its volume and add water until the cylinder is three-fourths full. Shake up the mixture vigorously and allow it to settle for one hour.] It shall not contain more than 1.5% of calcium and magnesium calculated as $CaCO_3$. Ignition loss should not exceed 0.7% of the weight. The solubility of supporting gravels in 40 % hydrochloric acid after 24 hours shall not exceed 10% for 10 mm or larger size gravel and 5 % for smaller than 10 mm size.

All filter media shall be supplied in polythene bags. Suitable care should be taken to protect the media from spillage or contamination. Storage on site shall only be in an approved area, well drained and free of mud and silt. The filter media shall be carefully placed in the filter beds and shall not be dropped or dumped or machine handled so as to be detrimental to the floor media, nozzles or sealant. Etc.

It shall be deemed that the Contractor has investigated all potential sources and verified that sufficient quantities of satisfactory filter sand can be obtained, packed and stored on site.

The under drain system shall be a pipe grid type consisting a central pipe/channel with lateral system of PE -100 or PVC Class 15 pipes having perforations or nozzles. The holes drilled in the pipes shall be according to drawing and properly bushed. Alternatively, "Tee pee type" i.e. reinforced concrete slabs with plastic or glass tube orifice may be provided. This "Tee pee type" of under drainage will be preferred subject to satisfying other design considerations. Both types of under drainage system shall confirm to IS: 8419 (Part 2). The under drain system shall be designed to provide uniform draw-off of filtered water and uniform distribution of wash water and air over the whole area of the filter. Particular provisions have to be made for the handling of the high air velocities at the inlet zone of the manifold.

Before filling the supporting layers and the sand of the filter beds the whole under drain system shall be thoroughly cleaned and tested for equal distribution of water. The Contractor shall take all necessary measures to ensure that false floor if used containing nozzles and the water conveying system of pipes of channels connected to the floor are free from any debris, concrete, sand or other material which could otherwise block or partially block nozzles or any openings orifices.

Such requirements shall also apply in the case of piped laterals with nozzles or orifices. It shall be the responsibility of the Contractor to remove any such debris before the commissions laying filter floors or laterals and shall continue to remain his responsibility for excluding unwanted materials, which could block the filters until the end of the defect liability period.

Each filter shall have a central and lateral wash water trough made, which shall be connected with adequate slope to the wash water outlet to prevent deposits of silt. They shall allow an equal withdrawal of the wash water during backwashing the filter.

The inner dimension of trough shall be as per drawing. However, thin Concrete channel of ≥M-20 grade or Steel or MS section with galvanizing can be provided with appropriate support. The section material and support shall be as per the Engineer decision.

Parameters:

Government of Nepal
Ministry of Infrastructure Development
Department of Water Supply and Sewerage Management Office
Water Supply and Sewerage Management Office
Butwal, Rupandehi

Office Chief

Filters	
Filtration rate	6 cum/sq m./hour
Free board	0.5
Airflow for air scouring.	800 to 1000 LPM/sq.m.
Backwash water flow for backwashing.	600 lpm/sq m.
Filter media:	
Depth of sand bed > 600mm	600 mm
Effective size of sand particles	0.45 – 0.7 mm
Uniformity coefficient of sand	1.3 – 1.7
Minimum Silica Content.	90%
Depth of Gravel bed	Multi layers (Refer Drawing)
Maximum Permissible velocities (m/s)	
Filter Inlet.	0.6
Filter Outlet.	1.25
Backwash Inlet.	3.5
Backwash Out let.	3.0
Air for scouring	25

8.2 Rapid Sand Filter

Rapid sand filter comprises of a bed of sand serving as a single medium granular matrix supported on a gravel overlaying underdrainage system. The distinctive features of rapid sand filtration as compared to slow sand filter include careful pretreatment of raw water to effectively flocculate the floc particles, use of higher filtration rates, coarser but more uniform filter media to utilize greater depths of filter to trap influent solids without excessive head loss and backwashing of the filter bed by reversing the flow direction to clean the entire depth of filter.

Parameters of Rapid Sand Filter

S.No.	Parameters	Unit	Criteria
1	Period of operation	hour/day	23.5
2	Filtration rate	m/day	120 - 240
3	Number of filters	No.	≥ 2
4	Filter shape		Rectangular
5	Filter depth Free board	m	≥ 0.5
	Supernatant water	m	0.6-2.0
	Filter sand	m	0.6-0.9
	Supporting gravel	m	0.4-0.6
	Underdrainage system	m	varies
6	Effective size of sand	mm	0.45-0.60
7	Uniformity coefficient of sand		<1.70
8	Size of supporting gravel	mm	2-60
9	Minimum surface area per unit	m2	10
10	Maximum surface area per unit	m2	30
11	Length/width ratio		1.25-1.35

Common grading and supporting gravel medium layer thickness:

40 – 60 mm	**120 – 200 mm**
20 – 40 mm	**80 – 120 mm**
10 – 20 mm	**80 – 120 mm**
5 – 10 mm	**60 – 80 mm**
2.5 – 5 mm	**60 – 80 mm**
Total	**400 – 600 mm**

Government of Nepal
Ministry of Infrastructure Development
Department of Water Supply and Sewerage Management Office
Butwal, Rupandehi

Office Chief

8.2.1 **Underdrainage System**

There are various forms of under drainage systems for these filters out of which the following two systems are commonly adopted which are:

(a) Perforated pipe system
(b) Pipe and strainer system

8.3 Air Blower and Motor

Supply, Installation, commissioning and testing of Twin lobe air blower shall consisting of CI body and drive motor mounted on common platform to make a complete running operational assembly for delivering compressed air to the rapid sand Filter backwashing system with the following specifications: -

8.3.1 Air Blower

Flow Rate: 800 to 1000 LPM/sq.m

Pressure outlet: 0.5 kg/ sq. cm

MOC: lobes CI grade 25.

Main casing side plate CI grade 25

Shaft: Alloy steel EN 24

Gear 20Mn Cr 5, bearing set of 4 + 4

Belt: V type belt with 3 grooved pulley of equivalent size

Base Frame: MS channels shall be as per recommendation of supplier and support for air blower and Motor assembly to give minimal vibration.

Silencer: MS sheet tubular silencer to minimize sound below 70 dB

NRV: Cast Iron NRV of dia ≥110mm duly mounted on supply line to the ETP tank complete with flanges nuts bolts and gaskets 3mm thick neoprene material.

8.3.2 Motor

Capacity for above Air blower, 4 pole, 3 phase, 415 volts, F class insulation, TEFC motor with CI casing, rain proof body and connecting plate duly tested as per standard norms applicable.

Supply, Installation, commissioning and testing of vibration pads (Cast Iron with rubber sheet packing & spring based) to be mounted at the base of the base frame of complete air blower and motor assembly as mentioned in Sr. No. 1 and 2 above.

Installation of air blower assembly to be done as per the site condition which shall include:

Modification of existing pipe line dia 300mm by cutting, welding, painting, supply and installation of NRV, flange dismantling and fixing to match with the air blower assembly height and in between distance etc. All masonry work like cutting of walls, plastering, colour washing as per site condition are in the scope of the work.

Supply, Installation, commissioning and testing of PVC insulated flexible cabling duly covered with PVC batten/ flexible pipe and clamped to wall, for connection with motor and main panel as per site conditions complete with valve mounted PVC batten of size 50 x 20 mm duly fixed with SS pins.

9 PUMPS AND RELATED ACCESSORIES

Government of Nepal Ministry of Infrastructure Development Department of Water Supply and Sewerage Management Office Butwal, Rupandehi

Office Chief

The submersible pump is used for pumping of clean, cold water, non-corrosive and non-abrasive to the pumpset material in the drinking water purpose.

Pumps supplied and installed shall be capable of satisfying the performance requirements in the relevant technical specification. However, the offered submersible pump must be operated at optimum efficiency and well perform in its duty load point. Low maintenance costs, reliability and trouble-free operation will be the prime consideration when selecting pumps.

Pumps shall be quiet in operation and free from vibration. Pump speed shall not exceed 1450/2900 RPM. The pump should have the maximum efficiency at the specified duty point. Approximate power inputs[1]are given in Schedule of Requirements; however, the minimum efficiency of the pump shall not less than 70%, and should meet the stipulated design discharge and head.

Pumps shall be designed to handle the described liquids and shall run unattended for long periods (15 – 22 hr/day). A corrosion resistant metal nameplate shall be permanently attached to the pump. Pumps shall have stable characteristic curve, the characteristic of continuously rising head with decreasing capacity from rated capacity to shut-off, unless otherwise specified. Pumps shall have in-built dry-running protection and shall be started by motor control switch panels or electric starters as specified in section 9.14. Pump characteristic curves showing head/discharge, efficiency and power absorbed shall be submitted with the contractor's Tender.

9.1 Pumps

The pump set in general shall confirm to IS: 8034 or equivalent British and other International Standard. In case of the proposal for Indian Production the pump set shall bear ISI mark. The manufacturer shall be certified as per ISO 9001.

9.2 Components of Submersible Pumps

Submersible pump set shall be a compact unit made up of a submersible pump and a submersible motor with shafts connected by a sleeve and operates beneath the surface of water. This low maintenance pump set is suspended vertically/ horizontally as per pumpset design configuration from raising main when installed.

9.3 Submersible Pumps

The submersible pumps shall be multistage centrifugal pumps with radial or mixed flow impellers. The casing of the radial flow impeller pumps shall be clamped together by flat steel hook bolts, whereas that of mixed flow impeller pumps by studs. Between the pump and the motor is the suction casing, a non-return valve shall be fitted to the pump discharge.

9.4 Submersible Motors

Submersible motors shall be water filled, water lubricated squirrel cage type. The axial thrust generated by the pump is absorbed by a trust bearing fitted at the bottom of the motor. The diaphragm below the thrust bearing compensates the overpressure which arises as a result of the thermal expansion of the water filled, when the temperature of the winding rises. Refer detail in section 9.11.

9.5 Bearings

The pump shall be provided with radial bearings. The motor has radial as well as axial thrust bearings. All the bearings shall be water lubricated and protected to a large degree against the ingress of sand by suitable structural elements.

9.6 Pump Set/Assembly Components

Submersible pump set shall have the following minimum components with the following specifications: -

a) Pump Head Assembly
b) Riser pipe
c) Pump Bowl Assembly
d) Suction case with Strainer
e) Submersible motor
f) Electric cable (submersible and armoured)
g) Motor Control panel

9.7 Pump Head Assembly

Pump head assembly shall comprise of a minimum of the following:

a) Surface Discharge Plate (refer Section 14.1)

---

[1] Approximate power required for a submersible pump-set is calculated by using minimum overall efficiency as 60% and 1.15 as safety factor (excess factor). However, offered pump-set should be as energy efficient and effective as possible and should meet the stipulated design discharge and head.

Government of Nepal
Ministry of Infrastructure Development
Department of Water Supply and Sewerage Management Office
Water Supply and Sewerage Management Office
Butwal, Rupandehi

Office Chief

b) Gate Valve (refer Section 3.3.2.7.1.2)
c) Air Valve (refer Section 3.3.2.7.2)
d) Non Return Valve (refer Section 3.3.2.7.4)
e) Mechanical Coupling (refer Section 3.3.2.6)
f) Water Meter (refer Section 4)
g) Other accessories like pressure gauges, bends, tail pieces etc. (refer section 3.3.2)

9.8 Riser Pipe and Fittings

Riser or column pipe shall be made of minimum medium class galvanized mild steel pipe and shall confirm to IS 1239 (Part-1) 2004, BS: 1387 or equivalent standards. It may be ERW or seamless. Each riser pipe shall be 3 m in length except the top and lowest pipe, which shall be 1 m long or as defined by the Engineer considering the site conditions. The pipes shall be flanged ended with welded flange in each end. Flanges which meet with pipes shall be drilled as per BS EN 1092-2 (ISO 2531). The flange should have two cuttings of the size of the cable with sufficient depth and shall be galvanized. The maximum size of the flange should be at least 2 cm less than the inner diameter of the tube-well. Nipple of various lengths as required by the Employer shall be manufactured of Medium/Heavy duty galvanized mild steel pipes conforming to IS: 1239 (Part I) - 1990 or equivalent and threads to conform with IS: 554 - 1975 or equivalent. Bolts and nuts shall be hexagonal, galvanized and shall be in accordance with BS 4190 or equivalent. Washer shall be of proper quality and strength. Each set of flange jointing materials shall be supplied complete with nuts, bolts, washers and joint rings with an additional 10% as spares.

9.9 Pump Bowl Assembly

The pump bowl Assembly shall made of close-grained cast iron, free from blowholes, sand holes or other detrimental defects. The bowl unit shall be capable of withstanding a hydraulic pressure equal to twice the pressure at the rated capacity or, 1.5 times the shot off head, whichever is greater. The pump shall be equipped with replaceable bearing, whichever provided. The pump shaft shall be made of stainless steel. Impeller may be of enclose or semi open type and shall be properly balanced. Impeller shall be made of bronze or Noryl i.e. modified Ppo as per IS: 8034-1984 or equivalent British Standard. Each impeller shall be securely fastened to the shaft. The delivery outlet of the bowl assembly shall comprise of a spring loaded Non-Return Valve.

The pump must be manufactured with non-corrosive materials, Ceramic or equivalent non corrodible materials must be used for bearing. For submersible Pump, Pump body and rotors and impellers must be made of stainless steel with a minimum grade of AISI 304 or higher. In the pump set/assembly, materials having higher grade or better performance may also be considered provided that there is a sufficient reason and documentary proof of the materials in the present operating conditions.

The bowl assembly shall bear a nameplate giving the following information:

a) Manufacturer's name or trade-mark (if any)
b) Model
c) Serial No.
d) No of stages
e) Head, at specified duty point
f) Discharge, as specified duty point

9.10 Suction Case with Strainer

The opening of the suction case for the entrance of the liquid shall be of proper size and shape to avoid eddy currents. The suction case shall be fitted with a strainer made of corrosion resistant material. Suitable sand guard shall be provided just above the suction case bearing to prevent the entry of foreign matter into the suction case.

9.11 Submersible Motor

Submersible Motor shall confirm IS 9283-1979 or equivalent British or International Standard and squirrel case induction type suitable for operation on 415± 10% Volt A.C. with 50 HZ frequency. The motor should be water filled and water lubricated. The thrust bearing design is to be Mitchell type with self-adjusting thrust pads resting on individual steel balls to absorb axial thrust under adverse conditions. The thrust bearing shall be of adequate size to withstand the weight of all rotating parts as well as the imposed hydraulic thrust. It shall have sufficient capacity to permit the pump to operate for short periods with discharge valve closed. The starter should be fully rewindable with special PVC insulated winding wire with overhang design to facilitate easy maintenance and repair; the starter stampings are to be suitably locked both in horizontal and circumferential directions to insure positive locking. The motor shall be protected by means of cable glands; rubber seals etc. from ingress of borehole water, sand and other foreign matters. The thrust bearing housing shall be provided with a drain plug to empty the pure water filled into the thrust bearing housing/motor. The rotor shaft shall be provided with a breathing attachment like bellows, diaphragm, etc to compensate the volumetric variations due to the change in temperature. The motor (casing, shaft, bolts/nuts etc.) shall be made of corrosion resisting

materials or suitably treated materials to resist corrosion under normal conditions. The motor should have at least 10% margin at duty point as well as should not get overloaded in the entire range of operation. The motor shall have following information:

Name of manufacturer
Motor rating (KW or HP)
Nominal speed
Rated current (A)
Rate Voltage (V)
Frequency (Hz)
Connection system
Starting system
Type of duty (continuous)
Materials of casing, shaft, bolts/nuts

There shall be an indication to identify the motor with its pump. A suitable Coupling arrangement shall be provided to couple the pump-set directly, which shall be capable of transmitting the total torque of the unit regardless of direction of the rotation.

9.12 Submersible Cable (Cable for Submersible pumps)

The electric cables must be well connected and sealed into the motor and delivered with a length of minimum 3 meters. Submersible cable shall confirm to 4.4 of IS 9283-1979 or equivalent British or International Standard. Submersible cable shall be sized not less than 4mm^2 up to 20 HP and 6-10 mm^2 for 30-40 HP motor, unless otherwise specified in Schedule of Requirements. The offered cable must meet the important parameter like starting current and continuous full load current. It shall be sized to limit the voltage drop to 5% at the motor's terminals. They shall be made of copper conductors. The conductor insulation shall be water and oil resistant, suitable for continuous immersion. The submersible cable will be joined by a watertight joint in the submersible motor cable. The connection shall be a permanent type and non-possibility for separation after installation. The Contractor shall for each of the submersible pump, supply adequate faster. The fastener shall be reusable and robust.

9.13 Armoured Power Cable

Suitable sizes of LT power cables for connecting the autotransformer starter to motor shall be supplied and delivered. The power cables shall 3.5-core Copper/ Aluminium armoured power cables of 1.1 KV grade and suitable for 415 V, 3-phase, 50Hz, LT electric system. The sizes of the power cables are given in Schedule of Requirements. The offered cable must meet the important parameter like starting current and continuous full load current. The electric power cable shall be manufactured and tested in full compliance with latest version of NS, BS, IS, ISO or equivalent international standard.

Control wiring shall be done by 1.1 KV grade PVC wires with minimum 2.5 mm^2 copper conductor. Suitable size of control cables for connecting the starter to motor shall be also be supplied.

9.14 Motor Control Panel

The Motor Control Panel Board may be either self supported or wall mounted type made of mild steel sheet of thickness at least 1.6 mm and suitable shape and size. The board shall be painted with one coat of priming and two coats of anti corrosion paint. The switch panel might be installed outside at the well or under a shelter on an ambient temperature of 0 °C and 50 °C and in a sealable weatherproof cover.

The motor control panel must be safe to operate the pump motor. Provisions for the protection of motor against over loading, dry running, single phasing and opposite phasing should be provided.

In general, use DOL starter for maximum up to 7.5 HP, STAR/ DELTA: for above 7.5 HP to 40 HP and Autotransformer/Soft Starter: above 40 HP motor unless otherwise specified in the technical specification, suitable for the submersible pumps, 415 Volts and 50 Hz, 3 phases. Specifications must be according to IP54 or equivalent standards.

The motor control panel must be compatible with the pump-motor set, to be manufactured by same manufacturer or certified by pump-motor manufacturer or their authorized supplier adds an extra layer of assurance that the system will function correctly and meet the necessary standards.

The motor controller shall be equipped with all the required components and features for its proper functioning and safety requirements that included, but not limited to the following: -

a. Molded case Circuit Breaker (MCCB) of suitable capacity - AT /AF = 1.5 x line current / 3 x line current

b. Fully automatic air break type Starter with magnetic contactors of capacity: 3 X line current for DOL and line current rating for Star-Delta, Bi-metallic overload relay (phase current ± 20%) and electronic timer.

c. Low Water Level Guard/ Float- less Switch

Office Chief

d. Single Phase Preventer and Phase Sequence Relay.

e. Voltmeter with Selector Switch between all phases.

f. C/T Ammeter with Selector Switch.

g. Push Button Switches for 'START' and 'STOP' the motor.

h. Indicating Lamps for various actions.

i. Cable connector (2 x full current capacity)

j. Proper earthing should be provided to all electrical devices like, motor control panel, distribution box (DB), pump prime mover etc.

The details of technical specification may vary depending on types of motor control panel selected. The detailed information for the selected types of motor control panels should include specific to each type control panel.

Major items in one Auto-Transformer Starter (ATS) shall consist, but may not be limited, of the following unless otherwise specified in the technical specifications:

S. No	Descriptions	Quantity
1	Auto transformer tap setting 65%, 80% and 100% air cooled	One set
2	Heater 100w, 230 V A.C.	One set
3	Thermostat 0 to 110 degree centigrade	One set
4	Hour meter	One set
5	Ammeter with Selector Switch (200/5 operated)	One set
6	200/5 Current Transformers	Three sets
7	Time delay relay	One set
8	Contactor (about 2.5 times the fall load current) & Ampere TP, (coil voltage 230V, 50 Hz)	Three sets
9	Overload Relay (of suitable range) or as required Ampere rating	One set
10	Control Terminals	One set
11	Auxiliary Contact Blocks (mechanical latching type)	One set
12	Insulation/Moister/Thermister relay	One set
13	Voltage monitoring relay having phase failure and under voltage release	One set
14	ON/Trip indication	Two set
15	Push buttons (on/off)	One set
16	Control fuses	One set
17	Push button for mute of alarm hooter	One set
18	Control relay for alarm hooter with control fuses	One set
19	Indicating lamps with control fuses	One set
20	Earth fault relays	One set
21	Probe for water level	One set
22	Phase indicating lamps with fuse	One set
23	Water lever controller	One set

The indication Lamps are as following:

- ON green
- OFF red
- Fault red
- Alarms yellow

Each indicating lamp shall be of illuminated push-button type; centralized lamp test is not accepted. All the instruments, devises and parts of the panel shall be facing the front of the panels. Writing on the panel must be in English language.

The motor must be protected by a thermal overload relay of suitable adjustable range and shall be installed between the running conductor and motor. The overload range shall be approximately from 80% to 120% of the nominal current rating of the motor. The starter shall be rated to stand a minimum of four starts per hour at an ambient temperature.

Motor thermal protection relay to protect motor from overheating. The sensor provided in the motor starter winding resistor sensor as following:

- Digital indication
- Adjustable from 0 to 100 trip
- Change over contacts
- Resistor sensor
- Supply voltage of 220 Volts

Separate current transformer to be provided for protection and instrumental duties. Fuses and links shall be grouped where appropriated according to the functions and must be clearly marked both on panels and the associated wiring diagrams. All cable and piping shall be made through glands in a plate covering the base of the switchboard.

The Auto Transformer Starter (ATS) shall have the following features:

- Air cooled design
- The core and coil shall be impregnated under vacuum in high temperature grade
- Designed and tested to meet the requirement of IEC 292-4.
- Tap setting at 65%, 80% and 100%
- Insulation class F

The Auto Starter must be fully assembled by the manufacturer and where modifications such as additions of extra protection devises or indications are required; these modifications shall be performed in a similar manner by the manufactures. In this case full details of modifications and circuits diagrams shall be provided. The manufacturer should conduct the required tests on each starter as per IEC 439-1 1990.

9.15 Documentation

The following information/documents to be furnished by the Contractor for the offered model pump-motor set with their technical offer:

- Certification for relevant Standards
- Performance Curves
- Discharge vs. overall efficiency
- Head V/s Discharge Curve
- BHP (power input) V/s Discharge Curve
- Efficiency V/s Discharge Curve
- NPSH V/s Discharge Curve

Besides, following additional information the Contractor shall also be furnished from the Supplier:

- No of stages
- Discharge in l/s or l/m or m^3/hr
- Total pumping or duty head in meter
- Shut-off head
- Pump-input at duty point in KW or HP
- Efficiency of the pump at rated Duty Point
- Details of motor
    - Rating in KW or HP
    - Type
    - Details of power supply
    - Rated speed

On delivery of the pump-motor set, Contractor shall furnish following documents:

- Test certificate from the manufacturer
- Guarantee of workmanship and materials

Documentation for the cables and Auto Transformer Starter (ATS)/ motor control panel shall be furnished as per the technical specifications, along with wiring diagram of the electric panel board.

9.16 Guarantee of Performance

The pump-set shall be guaranteed for their performance of the pumping rate, head, overall efficiency and overall power input. The pump-set shall be guaranteed by the manufacturer against the defects in material and workmanship under the normal use and service for at least 12 months from the date of delivery to the purchaser or as specified in the Conditions of Contract.

9.17 Operation Maintenance Manual and Spare Part List

The Contractor must provide with each submersible pump-motor set and electric control panel board in English language:

- Installation manual
- Operating and maintenance instruction manual
- Works manual for repair and maintenance works
- Spare parts list/ manual

Contractor shall submit with their tender sufficient information to show the Contracting Authority that the proposed pumps will comply with the performance requirements.

Government of Nepal
Ministry of Urban Development
Department of Water Supply and Sewerage Management
Water Supply and Sewerage Management Office
Butwal, Rupandehi
Office Chief

Office Chief

10 TRANSFORMERS, ELECTRICAL FEEDER LINES AND INSTALLATIONS

The Scope of works includes specifications of all requirements for electricity feeder line including transformers, poles, conductors, insulators, fittings and control equipment. The specifications and associated drawings mentioned in this contract shall be according to the latest specification and construction drawing standards adopted by Nepal Electricity Authority (NEA).

10.1 Transformer

10.1.1 Distribution Transformer

10.1.1.1 Scope

These specifications cover the requirements of oil-immersed, natural-cooled single and three- phase distribution transformers suitable for outdoors installation on 11kV, 50 Hz distribution systems.

10.1.1.2 Service Condition

The transformers shall be designed and constructed for outdoor installation and operation under the following conditions:

Ambient temperature:	-5 deg. C to 50 deg. C
Relative humidity:	up to 99%
Altitude:	up to 3000m above the mean sea level

10.1.1.3 Standards and Quality Certification

10.1.1.3.1 The equipment specified in this Section of the Contract shall conform to the latest edition of the appropriate IEC specifications and/or other recognized international standards. In particular:

IEC 60076	Power transformers
IEC 60137	Insulating Bushings for alternating voltages above 1 kV
IEC 60156	Insulating liquids-Determination of the breakdown voltage at power frequency- test method
IEC 60296	Specification for unused mineral insulating oils for transformers and switchgear
IEC 60551	Determination of transformer and reactor sound levels
IEC 60616	Terminal and tapping materials for power transformer
IEC 60722	Guide to lightning and switching impulse testing of power transformers and reactors
IEC 60733	Determination of water in insulating oils.

10.1.1.3.2 The manufacturer of the offered transformers must have been accredited with the latest edition of ISO 9001 (including design in the scope of registration) quality certification.

Item	Description	Units	11/0.4KV, Rated KVA as per rated
1.	Applicable Standards		
2.	Rated Power Output	KVA	As per BOQ
3	Number of Phases		3
4	Rated Frequency	Hz	50
5	Rated Primary Voltage	V,	11000
6	Rated Secondary Voltage	V	400
7	Vector Group		Dyn 11
8	Type		
	-Duty		Outdoor
	-Cooling		ONAN
9	Off-Load Tapping, Primary	%	+5,0,-3 X 5%
10	Temperature Rise in	0C	
	-Winding		55
	-Top Oil		50
11	Applied Test Voltage 1min, 50Hz	KV	
	-Primary winding		28
	-Secondary Winding		3
12	Impulse Test Voltage	KV	
	Full wave, primary winding		75
13	No Load Losses	Watts	As per NEA Standard
14	Load Losses	Watts	As per NEA Standard
15	Impedance Voltage	%	4
16	Material of Windings		

Government of Nepal
Ministry of Infrastructure Development
Department of Water Supply and Sewerage Management Office
Butwal, Rupandehi

Office Chief

	-High Voltages		Copper
	-Low Voltages		Copper
17	Approximate Dimensions		
	-Length		
	-Height		
	-Width		
18	Total Weight		As per NEA Standard
19	Oil Quantity		As per NEA Standard

10.2 Diesel Generator

Genset Specification	
Genset rating	Prime
Genset output (KVA/KW)	As per BOQ
Aspiration/Cooling	TCAC
No. of cylinders/arrangement	4/ Inline
Displacement	4.87
Bore x stroke (mm)	108 x 133
Compression ratio	17.2
Rated RPM	1500
Overspeed trip (RPM)	1650
Governor type/DG Performance Class	Mech/G2
Frequency regulation	Isochronous
Air cleaner type/qty	Dry/01

Alternator Specification	
Voltage (3P)	415
Frequency (Hz)	50
Current (Amps)	As per rating of DG
Type	4P, rotating field
Voltage regulator	Solid State
Voltage regulation (%)	+ or – 1%
Insulation Class	H
Temperature rise (Deg C)	125
Bearing (qty/type)	1, sealed
Coupling	Flex disc
One step load acceptance	100% of rating
Unbalanced load acceptance	25% of rated amps

Cooling System	
Max ambient capacity (Deg C)	50
Coolant capacity (Eng+Rad) (L)	25

Exhaust System	
Max allowable backpressure (kPa)	5.5
Exhaust temperature (Deg C)	500
Silencer type	Residential

Engine Electrical System	
Charging Alternator VDC/Amps	12V /35A
Starter motor rated voltage (DC)	12
Battery Voltage (DC) / Capacity (AH)	12V/88AH

Standard Scope of Supply
Engine: Direct injection, water cooled, four-cylinder, 4 stroke, rated at 1500RPM, confirming to ISO 3046/BS 5514 with the following: -Radiator cooling -Mechanical Governor -Exhaust manifold with SS exhaust flexible - Flywheel and flywheel housing - Fuel and lube oil filters -Dry type air cleaner -Starter motor, battery charger
Alternator: Meccalte/Leroy somer/Stamford/CG
Acoustic Enclosure: Power coated weather proof canopy. Engine and alternator mounted on AV mounts, with silencer and SS exhaust bellow optimized to meet stringent MOEF/CPCB norms for sound and emission -Base rail with draw out type fuel tank, drain plug, inlet and outlet connections, air vent, level gauge
Control Panel: Fabricated from CRCA Sheet and powder coated with RAL 9003 with the following: -MCCB of suitable rating with short circuit protection

-Controller with multi feature display - Load on and set running indication lamps -Copper conductor cables between alternator and control panel
Literature: -Operation and spare parts manual in CD format -Installation and general maintenance guidelines -Foundation drawings Alternator and control panel wiring drawings -Test Certificate

Government of Nepal
Ministry of Infrastructure Development
Department of Water Supply and Sewerage Management Office
Sutwal, Rupandehi

Office Chief

10.3 Voltage Stabilizer

Capacity	As per BOQ
Input Voltage	300 to 470 V.AC
Output Voltage (Normal)	400V Ac ± 1% (Adjustable
Supply	3-Phase- 4 Wire System
Supply Frequency	47 to 53 Hz
Load and Line Regulation	1%
Ambient Temperature	0 to 45° C
Effect of Load Power Factor	None
Correction Speed	30-45 V/Sec
Efficiency	Better than 90%
Duty Cycle	100% continuous
Cooling	Air/Oil as per site condition
Panel Control: -Input/ output select switch, Auto/Manual select switch Buck / Boost Switch to adjust the output Voltage in manual mode. Volts adjust program to set required output voltage in auto mode	
Panel Indication: Output -on/input- Low/Input-High and Digital Display	

10.4 11 KV AAAC XLPE Insulated Covered Conductor

10.4.1 Scope

This specification covers details of All Aluminum Alloy Stranded XLPE Insulated Covered Conductors for use on 11KV transmission system. The conductor covered insulation shall mark EN 50397-1:2006 by embossing/printing on it at every meter throughout the length.

10.4.2 Service Conditions

The conductor to be supplied against these specifications shall be suitable for satisfactory continuous operation under the following tropical conditions.

a) Maximum ambient temperature (Degree C)----------50
b) Maximum temperature of air in shade (Degree C)----------3.5
c) Relative Humidity (%)----------10 to 100
d) Maximum Annual Rainfall (mm)---------- 1450
e) Maximum Wind Pressure (kg/sq.m)---------- 150
f) Maximum altitude above mean sea level (meter) ----------1000
g) Isoceraunic Level (days/year) ----------50
h) Seimic Level (Horizontal acceleration)----------0.3g

10.4.3 Conductor Sizes

a) 7/2.00mm (22 sq.mm)
b) 7/2.50mm (34 sq.mm)
c) 7/3.15mm (55 sq.mm)
d) 7/3.15mm (80 sq.mm)
e) 7/4.26mm (100 sq.mm)
f) 19/3.15mm (148sq.mm)
g) 19/3.94mm (232sq.mm)

10.4.4 Application Standards:

Unless otherwise stipulated in this specification, the conductor shall conform to the following Indian/International Standards.

S.No.	INDIAN/INTERNATIONAL STANDARDS	
1.	IS:398 (Part IV) / 1994	Specification for aluminium conductors for overhead transmission purpose
2.	EN 50397-1:2006	XLPE Insulation covered conductor Specification for Voltage 1KV to 33KV
3.	IS: 10418	Reels and drums for bare conductors.

Government of Nepal
Ministry of Infrastructure Development
Department of Water Supply and Sewerage Management Office
Butwal, Rupandehi

Office Chief

10.4.5 Properties of Conductor

The properties of stranded all aluminium alloy conductors of various sizes shall be as in Table-I.

Table-I All Aluminium Alloy Stranded Conductor

Actual Area	Stranding & Wire dia.	Approx. overall dia.	Approx. mass	Calculated resistance at 20 d.c. (max)	Approx. calculated Breaking Load	Reactance per Km	Current Rating
1	2	3	4	5	6	7	8
Sq.mm	mm	mm	Kg/km	Ohm/km	kN	Ohms	Amps
22	7/2.00	6.0	60.16	1.5410	6.45	0.3556	115
34	7/2.50	7.5	94.00	0.9900	10.11	0.3556	150
55	7/3.15	9.45	149.20	0.6210	16.03	0.3556	234
80	7/3.81	11.43	218.26	0.4250	23.41	0.3394	270
100	7/4.26	12.78	272.86	0.3390	29.26	0.3394	325

10.5 Disc Insulator Fittings

10.5.1 Scope

This specification covers the fabrication and supply of tension type disc insulator fittings.

10.5.2 Description

10.5.2.1 The disc insulator fittings shall be supplied with ball and socket couplings (socket eye, ball eye/ball clevis etc.), twisted straps, and bolted type tension clamps. Number of U-bolts in tension set shall be 3 (three).

10.5.2.2 Tension clamp shall be suitable for ACSR conductor, diameter ranging from 5 mm. to 16.5 mm.

10.5.2.3 The ultimate strength of disc insulator fittings shall be more than 45 kN.

10.5.2.4 All components of disc insulator fittings shall be such that they fulfill all requirements of this specification and compatible with disc insulator specified in SPECIFICATION: SP-11.0

10.5.2.5 All parts of different fittings, which provide for interconnection, shall be made such that sufficient clearance is provided at the connection point to ensure free movement of insulator assembly.

10.5.2.6 The twisted strap shall be suitable for 50×100×50 mm. cross arm. Size of the holes for bolt, which anchors twisted strap with cross arm shall be suitable for insulator pins specified in SPECIFICATION: SP-11.0 and width of the twisted strap shall be designed accordingly. Diameter of nuts and bolts of strap shall be equal to shank diameter of insulator pins. Nuts and bolts shall also be provided with spring washer and split pin.

10.5.2.7 Unless otherwise specified in these specifications, disc insulator fittings shall be in accordance with IS: 2486 (Part I & II) or any other equivalent national or international standards.
2.8 The manufacturer of the disc insulator fittings must have been accredited with ISO 9001:2000 with design and manufacturing quality certification.

10.5.3 Material

10.5.3.1 The tension clamp shall be made of the aluminium alloy type. Other accessories like ball eye/ball clevis, socket eye, nuts, and bolts shall be made of hot rolled steel and obtained preferably by process of forging. Twisted cross arm strap shall be made of MS sheet metal. Cotter bolts and U-bolts shall be of galvanized steel. Cotter pins shall be stainless steel. Chapter 2. Specification of Electrical Equipment and Line Materials 2-199

10.5.3.2 All forging and castings shall be of good finish and free from flaws and other defects. The edges on the outside of fittings, such as at the eye, socket and holes, shall be rounded.

10.5.4 Galvanizing

10.5.4.1 All ferrous fittings and the parts other than those of aluminium alloy and stainless steel, shall be hot dip galvanized in accordance with IS: 2629-1985 or the latest version thereof or any other national or international standards that ensures at least equal or better quality to the standard mentioned above, will also be acceptable.

10.5.5 Tests

10.5.5.1 The disc insulator fittings shall comply with the following tests as per IS: 2486 (Part I) or any other equivalent national or international standards.

1. Type Test:

Government of Nepal
Ministry of Infrastructure Development
Department of Water Supply and Sewerage Management Office
Water Supply and Sewerage Management Office
Butwal, Rupandehi

Office Chief

- Verification of Dimensions,
- Visual Examination Test
- Slip Strength Test
- Mechanical Test
- Electrical Resistance Test
- Heating Cycle Test
- Galvanizing Test

2. Acceptance Tests:

- Verification of dimensions
- Galvanizing Test
- Mechanical Tests

3. Routine Tests:
- Visual Examination Tests
- Routine Mechanical Test

10.5.6 Marking

10.5.6.1 The tension clamp shall be marked on it following:

a) Name or trademark of manufacturer
b) Name of the Purchaser as follows: "NEA-NEC"

10.6 Galvanised Steel Bolts, Nuts And Miscellaneous Fastening Components

10.6.1 Scope

This Specification covers the fabrication and supply of galvanized steel bolts and nuts, as specified herein, for use in overhead electric line construction.

10.6.2 Material

10.6.2.1 The bolts and nuts shall be manufactured and tested in accordance with IS: 1363 (Part I)-1984 or the latest version thereof or any other national or international standards that ensures at least equal or better quality to the standard mentioned above, will also be acceptable.

10.6.3 General

10.6.3.1 Bolts and nuts shall be furnished in the types, diameters and lengths specified in the Schedules of Rates and Prices. However, the dimensions and length of threading of bolt must be confirmed with the Project prior to manufacture.

10.6.3.2 Thread forms shall be consistent with all material/items listed herein and shall not strip or slip under sustained tensile loading equal to the design tensile strength of the threaded material item.

10.6.3.3 The manufacturer must have been accredited with ISO 9001:2000 with design and manufacturing quality certification.

10.6.4 Machine Bolt and Nut

10.6.4.1 Each machine bolt shall be furnished with two (2) hexagonal nuts and two (2) plain washers assembled thereon.

10.6.5 Double-Arming Bolt and Nut

10.6.5.1 Each double-arming bolt shall be furnished with four (4) hexagonal nuts and two (2) washers assembled thereon.

10.6.6 Galvanizing

10.6.6.1 The stranded stay wire shall be galvanized after fabrication in accordance with IS: 2629-1985 or any revision thereof or other equivalent national or international standard provided that ensure at least equal or better quality to the standard mentioned above will also be acceptable.

10.6.7 Tests

10.6.7.1 The bolt and nut shall undergo type and routine tests in accordance with the relevant governing standard.

10.7 Crossarms And Bracing Angles

Government of Nepal
Ministry of Infrastructure Development
Department of Water Supply and Sewerage Management Office
Butwal, Rupandehi

Office Chief

10.7.1 Scope

This Specification covers the fabrication and supply of galvanized steel cross-arms and bracing members commonly used in overhead power line construction.

10.7.2 Material

10.7.2.1 The steel cross-arms shall be fabricated from hot rolled channels and angles.

10.7.2.2 The steel channels and angles shall be fabricated and tested in accordance with Indian Standards IS: 226-1975 and IS-808-1964 or any revision thereof or other equivalent national or international standard provided that ensure at least equal or better quality to the standard mentioned above will also be acceptable. The minimum tensile strength of the steel shall be 4200 kg/cm^2.

10.7.3 Description

10.7.3.1 The steel cross-arms and bracing angles shall be of sizes shown in the Table 1: Cross-arms and bracing angles, contained herein.

10.7.3.2 Conceptual hole pattern and size of holes on cross-arm channels are shown in appropriate drawings herein, however, the Supplier must confirm with the Project the locations and sizes of holes prior to the manufacture.

10.7.3.3 The surface of the steel shall be flat after drilling or (punching) and free of dimpling or imperfections. The hole edges shall be broken by reaming. The holes shall be full dimension after galvanizing and no minus tolerance of specified hole size will be accepted.

10.7.3.4 The steel cross-arm and bracing angles shall be furnished reasonably smooth on all surfaces and free of burrs or sharp projections.

10.7.4 Galvanizing

The steel cross-arms and bracing angles shall be galvanized after fabrication in accordance with IS: 2629-1985 or any revision thereof or other equivalent national or international standard provided that ensure at least equal or better quality to the standard mentioned above will also be acceptable.

10.7.5 Tests

Apart from the tests indicated herein in the referenced standards, the channels and angles shall undergo following tests:
- Visual Inspection;
- Verification of Dimensions

S.No.	Description	Type	Dimension in mm
1.	11KV, Single Pole, Triangular: 1.1 Pole Top 1.2 Standard	 Channel Channel	 100 x 50 x 6.4 x 5 x 300 100 x 50 x 6.4 x 5 x 1200
	11KV, Double Pole: 4.1 Standard 4.2 Bracing Member 4.3 Bracing Member	 Channel Angle Angle	 100×50×6.4×5×2390 40×40×5×2071 40×40×5×2719
3.	Transformer Platform Complete set	Channel Channel	100 x 50 x 6.4 x 5 x2500 100 x 50 x 6.4 x 5 x 1200
4.	Lightening Arrester and Cut-out Support (at Transformer Platform): 5.1 Support	Channel	100 50 x 6.4 x 5 x 2348

10.8 Flat Crossarm Brace

10.8.1 Scope

This Specification covers the fabrication, testing and supply of flat, galvanized steel cross-arm braces.

10.8.2 Material

10.8.2.1 The flat cross-arms brace shall be fabricated out of hot rolled steel flat.

10.8.2.2 The steel flat for cross-arms brace shall be fabricated and tested in accordance with Indian Standards IS: 226-1975, and IS-1731-1971 or any revision thereof or other equivalent national or international standard provided that ensure at least equal or better quality to the standard mentioned above will also be acceptable. The minimum tensile strength of the steel shall be 4200 kg/cm^2.

Government of Nepal
Ministry of Infrastructure Development
Department of Water Supply and Sewerage Management Office
Water Supply and Sewerage Management Office
Butwal, Rupandehi

Office Chief

10.8.3 Description

10.8.3.1 The brace shall be furnished reasonably smooth on all surfaces and free of burrs or sharp projections.

10.8.3.2 The surface of the steel shall be flat after drilling or (punching) and free of dimpling or imperfections. The hole edges shall be broken by reaming. The holes shall be full dimension after galvanizing and no minus tolerance of specified hole size will be accepted.

10.8.3.3 The brace shall have a minimum tensile strength of 3182 kg at the bolt-hole and bolt slot.

10.8.3.4 The brace shall be capable of being bent 10 degrees at the bolt hole or slot and 140 degrees at any point between hole and slot without cracking of the base metal on the outside of bent portion.

10.8.3.5 The brace shall be drilled and dimensioned in accordance with Dwg. CA10 attached herein.

10.8.4 Galvanizing

The flat cross arm brace shall be hot dipped galvanized after fabrication in accordance with IS: 2629-1985 or any revision thereof or other equivalent national or international standard provided that ensure at least equal or better quality to the standard mentioned above will also be acceptable.

10.8.5 Tests

Apart from the tests indicated herein in the referenced standards, the flat cross arm brace shall undergo following tests: - Visual Inspection; - Verification of Dimensions

10.9 Pole Clamps

10.9.1 Scope

This Specification covers the fabrication and supply of galvanized steel pole clamps with nuts, bolts and washers for use on overhead power line construction.

10.9.2 Material

10.9.2.1 The pole clamp shall be fabricated out of hot-rolled steel flat.

10.9.2.2 The steel flat for pole clamp shall be fabricated and tested in accordance with Indian Standards IS: 226-1975, and IS-1731-1971 or any revision thereof or other equivalent national or international standard provided that ensure at least equal or better quality to the standard mentioned above will also be acceptable. The minimum tensile strength of the steel shall be 4200 kg/cm^2.

10.9.3 Description

10.9.3.1 Outline details of pole clamps are shown in the drawings Dwg: CA13. Dimensions may be changed to comply with the final pole sizes selected. Therefore, the dimensions must be confirmed with the Project prior to manufacture.

10.9.3.2 Two (2) numbers of galvanized, 16 mm. (dia.) × 60mm. (length), fully threaded bolts with two (2) nuts and washers shall be provided with each pole clamp.

10.9.3.3 The fittings shall be free of burrs, splinters, splits, sharp points and edges, which may damage conductors or show evidence of poor workmanship.

10.9.3.4 The surface of the steel shall be flat after drilling or (punching) and free of dimpling or imperfections. The hole edges shall be broken by reaming. The holes shall be full dimension after galvanizing and no minus tolerance of specified hole size will be accepted.

10.9.3.5 The pole clamps shall have a minimum tensile strength of 3182 kg at the bolt-hole and bolt slot.

10.9.4 Galvanizing

The pole clamps and nut, bolts and washers shall be galvanized after fabrication in accordance with IS: 2629-1985 or any revision thereof or other equivalent national or international standard provided that ensure at least equal or better quality to the standard mentioned above will also be acceptable.

10.9.5 Tests

Apart from the tests indicated herein in the referenced standards, the pole clamps shall undergo following tests:
- Visual Inspection;
- Verification of Dimensions

Government of Nepal
Ministry of Infrastructure Development
Department of Water Supply and Sewerage Management Office
Water Supply and Sewerage Management Office
Butwal, Rupandehi

Office Chief

10.10 Surge Arrester

10.10.1 Scope

This specification covers the general requirements of the design, manufacture, testing, supply and delivery of Surge Arrester of Gapless Metal-Oxide type commonly installed on overhead
11kV power lines of the Nepal Electricity Authority.

10.10.2 System Parameters

a)	Nominal Voltage	11kV
b)	System Highest Voltage	12kV
c)	System frequency	50Hz
d)	No. of Phases	3
e)	Neutral Earthing	Effective
f)	System fault current	20kA rms

10.10.3 Service Condition

a)	Ambient temperature	-5 to 55 deg. C
b)	Annual average ambient temperature	30 deg. C
c)	Maximum relative humidity	99%
d)	Environmental condition	Humid Tropical climate
e)	Operational altitude	Up to 3000m above msl
f)	Isokeraunic (Thunder Day) level	90 days
g)	Solar Radiation	1.6kW/m2

10.10.4 Applicable Standards

The equipment and components supplied shall be in accordance with the latest editions of the standards specified below and amendments thereof and the NEA Specifications specified hereafter.

a)	IEC 60099-4 Part 4 Surge Arresters	Metal-oxide surge arresters without gaps for a.c. systems
b)	IEC 60099-5 Part 5	Selection and application recommendations
c)	IEC 61109	Composite insulator for a.c. over headlines with a nominal voltage greater than 1000V - Definitions, test methods and acceptance criteria
d)	IEC 60507	Artificial pollution tests on high voltage insulators to be used on a.c. Systems

10.10.5 Technical Parameters

10.10.5.1 Minimum Technical Requirements

	Description	Unit	Required ratings/features
1	Voltage rating	kV	9
2	Nominal system voltage	kV	11
3	Maximum system voltage	kV	12
4	System frequency	Hz	50
5	Nominal discharge current	kA	10
6	Type of Housing Insulator		Polymeric
7	Creepage distance (terminal to base)	mm	390
8	Minimum power-frequency withstand Voltage		
8.1	Wet	kV	50
8.2	Dry	kV	70
9	Impulse withstand (1.2/50µsec) Voltage	kV (Peak)	95
10	Maximum discharge (residual) voltage at 10kA lighting impulse current	kV (Peak)	29
11	Steep current residual voltage	kV (Peak)	32
12	Line Discharge Class		1
13	Energy absorption Capability with (4/10 wave)	kJ/kV	Not less than 3.2

Government of Nepal
Ministry of Infrastructure Development
Department of Water Supply and Sewerage Management Office
Water Supply and Sewerage Management Office
Butwal, Rupandehi
Office Chief

14	Pressure relief class		B
15	High current		for 0.2s 20 kA
16	Low current		for 0.5s 0.8 kA
17	One Second TOV withstand capability	kV	>1.15x12
1	Voltage rating	kV	9
2	Nominal system voltage	kV	11
3	Maximum system voltage	kV	12
4	System frequency	Hz	50
5	Nominal discharge current	kA	10
6	Type of Housing Insulator		Polymeric
7	Creepage distance (terminal to base)	mm	390
8	Minimum power-frequency withstand Voltage		
8.1	Wet	kV	50
8.2	Dry	kV	70
9	Impulse withstand (1.2/50μsec) Voltage	kV (Peak)	95
10	Maximum discharge (residual) voltage at 10kA lighting impulse current	kV (Peak)	29
11	Steep current residual voltage	kV (Peak)	32
12	Line Discharge Class		1
13	Energy absorption Capability with (4/10	kJ/kV	Not less than 3.2
	wave)		
14	Pressure relief class		B
15	High current		for 0.2s 20 kA
16	Low current		for 0.5s 0.8 kA
17	One Second TOV withstand capability	kV	>1.15x12

10.10.5.2 Power Frequency Voltage vs Time Characteristics

The manufacturer shall provide the power frequency voltage vs time characteristics, preheated to 60°C with no prior energy and with prior energy (specified by the manufacturer) in order to verify the TOV capability of the Arrester.

If a particular manufacturer is unable to meet the TOV condition of 1.15Ur (rated voltage of the Arrester) for 1 sec. duration, has the option of offering of an Arrester of a higher rating.

10.10.6 Basic Features

10.10.6.1 Design

The Surge Arresters shall be designed for outdoor service conditions stipulated above. They will be connected between phase and earth to protect distribution transformers and switchgear. It shall be complete with the following:

a) Clamps suitable to receive Copper/Aluminum (Line) Conductors from 4 mm-16mm
b) The mounting clamps suitable for bracket mounting on a structure made out of 100x50x6mm Channel Iron.

10.10.6.2 Manufacture

The Surge Arrester shall be of the non-linear metal-oxide resister type without spark gaps and the non-linear metal-oxide resister shall be housed in a hermetically sealed insulator casing to prevent ingress of moisture.

10.10.6.3 Insulator Details

The housing insulator of the surge arrester shall be of polymeric type and the insulator sheds shall be designed to minimize trapping of contamination.

The complete arrester shall withstand a 1000h salt fog test at continuous voltage as described in IEC 61109/IEC 60507. Additional cycle tests as described in IEC 61109 shall also be passed satisfactorily.

10.10.6.4 Moisture Sealing

The manufacturing procedure shall include an effective leak test and the manufacturers shall carry out the Special Thermal Stability Test as specified in IEC 60099-4.

10.10.6.5 Partial Discharge

Each surge arrester shall be tested to prove absence of partial discharge contact noise as specified in IEC 60099-4.

10.10.6.6 Arrester Disconnector

The Surge Arrester shall have a device for disconnecting it from the system in the event of arrester failure to prevent a persistent fault in the system and it shall give a visible indication when the arrester has failed. The arrester disconnector shall be tested as per IEC 60099-1.

Government of Nepal
Ministry of Infrastructure Development
Department of Water Supply and Sewerage Management
Water Supply and Sewerage Management Office
Office Chief

10.10.6.7 Insulating Bracket

A robust insulating bracket together with suitable mounting clamps to mount the Surge Arrester to 100x50x6mm Channel Iron Cross Arms shall be supplied with the Surge Arrester. The power frequency withstand voltage of the insulating bracket shall not be less than 20kV.

10.10.7 Additional Requirements

10.10.7.1 Rating Plate Markings

The following ratings and data of the arresters shall be provided and it shall be weather proof and corrosion proof. The plate shall be positioned at the bottom flange base and visible from the ground level.

(a) Number and year of the standard adopted
(b) Rated voltage / frequency
(c) Continuous operating voltage
(d) Arrester type and discharge class
(e) Nominal discharge current
(f) Manufacturer's identification
(g) Year of manufacture
(h) Serial number
(i) Contract No.

10.10.7.2 Packing

Each set of Surge Arrester shall be packed in a suitable box. Number of these boxes shall be held together in a firm position and measures shall be taken to avoid damage against jerks and collision between adjacent units during transportation.

Each packing shall contain a copy of installation instruction in English Language. The voltage rating, manufacturer's name/identification, Country of Origin, and the quantity shall be clearly marked on each packing.

10.10.8 Inspection And Testing

10.10.8.1 Acceptance Test

The successful Bidder shall make necessary arrangements for pre-shipment inspection and tests by the nominated NEA Inspectors to carry out in his presence the necessary Sample/Acceptance tests conforming to the relevant IEC on equipment and materials offered. Routine test report for all the items shall be furnished for the observation of the Inspector.

The acceptance tests as per IEC shall be witnessed by the NEA Inspector. (a) Power

frequency reference voltage test
(b) Partial discharge test.
(c) Lightning Impulse Residual voltage test. (d) Thermal
Stability test

10.10.8.2 Routine Test

The Routine Tests shall be carried out on all the arresters as per the relevant IEC and the test report shall be made available for the observation of the NEA Inspector at the time of inspection.

(a) Power frequency reference voltage test.
(b) Residual voltage tests.
(c) Partial discharge test.
(d) Leakage test

10.10.9 Bid Documentation

10.10.9.1 The following shall be furnished with the offer.

(a) Product Catalogues/Technical literature describing the constructional features, materials used for components, operational feature of the equipment, indicating the model number etc.
(b) Energy withstand capability & a description of the test carried out to measure the same.
(c) Power frequency withstand voltage versus time characteristic curve covering the time range from 0.1 sec. to 24 minutes.
(d) Dimensional drawings of the bracket mounting base, live conductor clamps, earth lead and automatic earth disconnecting device and overall dimensional drawing.
(e) Drawing of name plate to scale incorporating the particulars called for.
(f) Completed Schedule of Guaranteed Technical Particulars
(g) A copy of the Manufacturer's ISO 9001 Certificate conforming to design and manufacture
(h) Type Test Certificates: The Type Test Certificates shall be from an Accredited Independent Testing Authority acceptable to the Purchaser.
(i) Copy of the Governing Standards
(j) Technical Literature in English Language on installation, operation and maintenance with necessary circuit

diagrams and drawings.

Government of Nepal
Ministry of Infrastructure Development
Department of Water Supply and Sewerage Management Office
Water Supply and Sewerage Management Office
Butwal, Rupandehi

Office Chief

10.10.9.2 **Type Test Certificates**

Following Type Test certificates conforming to IEC 60099-4, IEC 60507 and IEC 61109 shall also be submitted with the offer.

(a) Insulation withstand test,
(b) Residual voltage tests,
(c) Long duration current impulse
(d) Operation duty test
(e) Tests of arrester disconnector,
(f) Partial discharge test,
(g) Seal leakage test,
(h) Tracking & erosion test for polymeric insulation

Test Certificates shall clearly identify the equipment concerned showing the manufacturer's identity, Type, Model and Serial Number of the equipment tested. Type Test Report shall include complete drawings and the model/type of the offered Arrester. Type Test Report shall be from a recognized accredited independent testing authority acceptable to the purchaser.

10.11 Distribution Cutout (Drop-Out Fuses)

10.11.1 Scope

This Specification covers the general requirements of the design, manufacture, testing, supply and delivery of drop out fuse complete with fuse carriers and mounting brackets commonly used on the primary side of 11 kV distribution transformers as protective device.

10.11.2 System Parameters

a)	Nominal Voltage	11kV
b)	System Highest Voltage	12kV
c)	System frequency	50Hz
d)	No. of Phases	3
e)	Neutral Earthing	Effective
f)	System fault current	20kA rms

10.11.3 Service Condition

a)	Ambient temperature	-5 to 55 deg. C
b)	Annual average ambient temperature	30 deg. C
c)	Maximum relative humidity	99%
d)	Environmental condition	Humid Tropical climate
e)	Operational altitude	Up to 3000m above msl
f)	Isokeraunic (Thunder day) level	90 days
g)	Solar Radiation	1.6kW/m2

10.11.4 Applicable Standards

The equipment and components supplied shall be in accordance with the latest editions of the standards specified below and amendments thereof and the NEA Specifications specified hereafter.

a)	IEC 60282-2	H.V. Fuses - Expulsion and similar fuses
b)	IEC 60071-1	Insulation co-ordination.- Part I Definitions, principles and rules
c)	IEC 60071-2	Insulation co-ordination - Part 2 - Application guide
d)	IEC 60273	Characteristic of indoor & outdoor post insulators for systems with nominal voltages greater than 1000V
e)	IEC 60694	Common Specifications for high-voltage switchgear & control gear standards
f)	IEC 60060-2	High-voltage test techniques -Part 2 Measuring systems

Government of Nepal
Ministry of Infrastructure Development
Department of Water Supply and Sewerage Management Office
Water Supply and Sewerage Management
Butwal, Rupandehi

Office Chief

10.11.5 Technical Parameters

10.11.5.1 Minimum Technical Requirements

S.N.	Description	Unit	Required ratings/features
1	Rated Voltage	kV	12
2	Rated Frequency	Hz	50
3	Rated Continuous Current	A	100
4	Dry Impulse withstand voltage (peak)		
4.1	Across isolating distance of the fuse base	kV	85
4.2	To earth and between poles	kV	75
5	Power Frequency withstand voltage (Wet 1min)		
5.1	Across isolating distance of the fuse base	kV	32
5.2	To earth and between poles	kV	28
6	Minimum power frequency withstand voltage		
6.1	Dry	kV	35
6.2	Wet	kV	30
7	Mounting Angle (to vertical plane)	deg	~15-20
8	Interrupting Rating		
8.1	Symmetrical Interrupting rating (min) rms	kA	8.0
8.2	Asymmetrical Interrupting rating (min) rms	kA	9.6
8.3	X/R ratio		4.0
9	Interrupting capacity	kA	10
10	Temperature Rise Limit (In air)		
10.1	Copper contacts silver faced	deg. C	40
10.2	Terminals	deg C	30

10.11.6 Basic Features

10.11.6.1 Design

The Dropout Fuse shall be of Class A as per IEC 60282-2. It shall be suitable for use in outdoor circuits under tropical conditions. The Dropout Fuse shall be complying with the minimum technical requirements stipulated above.

10.11.6.2 Manufacture

a) The Dropout Fuse shall be designed with a solid core, bird proof, one-piece Porcelain Insulator and should robust enough to withstand shocks due to frequent operations. The fuse carrier shall drop-out immediately following the blowing of the fuse.

b) Dropout Fuse within the same voltage class shall be so designed that fuse carrier together with mounting assembly shall be dimensionally compatible to facilitate the interchange of fuse carriers of the cutouts of corresponding rating.

c) The Dropout fuse shall be able to mount on a single channel iron cross arm (100mm x 50mm x 6mm) at an angle of 15 to 20 degrees to the vertical. The whole unit shall be complete with long mounting bracket, bolts, nuts & washers.

d) Fuse carrier shall be made of high strength fiberglass filament wound tube or suitable insulating material and it shall be protected from weather and environment by ultraviolet resistant coating. Inside liner of the fuse tube shall be constructed of a synthetic arc quenching material.

e) Copper Arc Shortening rod shall be attached to the cap of the fuse tube to obtain higher interrupting rating. A removable button head type fuse link having M6x1 thread shall be able to fix to the arc shortening tube.

f) The installation and removal of the fuse carrier shall be facilitated by inserting the operating rod into a lifting eye at the hinge end (lower) of the fuse carrier when it is in the dropped-out position. An operating lever eye shall be provided at the top of the carrier to facilitate a downward pull by the operating rod to release the latch incorporated in the stationary upper contact.

g) All castings such as upper and lower moving and fixed contacts, clamp type terminals, toggle mechanism shall be of phosphor bronze, silicon bronze, aluminum bronze or Silver- plated brass.

10.11.6.3 Stationary and Movable Contacts

a) The Stationary and Movable Contact surfaces shall be silver plated to minimize the contact resistance.

b) The upper stationary contact assembly shall be provided with a safety latch to prevent the fuse carrier from dropping due to vibration and the upper contacts shall be protected from any airborne contaminants.

c) A back up spring made out of stainless steel or phosphor bronze shall be provided to ensure constant pressure between the upper stationary contact and the upper movable contact of the fuse carrier.

d) The lower stationary contact support and the fuse carrier shall be machined at the swiveling or axle point to enable the fuse carrier with the fuse link to be correctly guided into the latching position by an operating rod. The hinge at the stationary contact shall be so designed to prevent the dropping off of the fuse carrier in the drop-out position,

due to shock and vibration.

e) A suitable guiding arrangement shall be provided in the upper contact to ensure easy engagement of the fuse carrier.

f) The Asymmetrical breaking current ratings shall be permanently marked on the upper metal part.

Government of Nepal
Ministry of Infrastructure Development
Department of Water Supply and Sewerage Management
Water Supply and Sewerage Management Office
Butwal, Rupandehi
Office Chief

10.11.6.4 Terminals

a) The upper and lower terminals shall be of Bi-metallic type, suitable to accommodate Copper/Aluminum Conductors of Sizes from 5mm to 14mm diameter.

b) The upper terminal shall be positioned to receive the conductor from either side or upward direction while the lower terminal shall be able to receive the conductor from either side or downward direction.

c) The maximum temperature rise for contacts (movable and stationary) shall not be more than 40°.C and, for terminals the temperature rise shall not be more than 30° C.

10.11.6.5 Galvanizing

All iron and steel parts such as mounting and support brackets, bolts and nuts, washers etc. shall be galvanized after processes such as sawing, shearing, drilling, punching, filling, bending and machining are completed. Galvanizing shall be the hot-dip process to comply with the standard ISO 1461.

10.11.7 Additional Requirements

10.11.7.1 Rating Plate Markings

The ratings and data of the Dropout Fuse shall be provided in the rating plate, which shall be weather and corrosion proof. The main rating plate near the supporting bracket of the insulator base shall carry the following information:

a) Number and year of the Standard adopted
b) Rated voltage/Rated maximum current
c) Class designation/Manufacturer's name or trademark,
d) Asymmetrical current rating/Symmetrical current rating/X/R Ratio.
e) Year of manufacture
f) Contract No.

The following information shall be marked on the fuse carrier.

a) Manufacturer's name or trademark
b) Rated Voltage/Rated frequency
c) Rated maximum current
d) Rated breaking capacity (Asymmetrical/Symmetrical current rating & X/R Ratio).

10.11.7.2 Packing

The pre-assembled dropout fuse unit (Dropout Fuse Base, Fuse Carrier and Mounting Bracket) shall be packed in a suitable hardboard box and the rated voltage of the unit shall be clearly marked on the box. Spare fuse carrier shall be supplied in suitable hardboard boxes, the quantity and the voltage rating applicable shall be clearly marked on the boxes.

10.11.8 Inspection And Testing

10.11.8.1 Acceptance Test

The successful Bidder shall make necessary arrangements for pre-shipment inspection and tests by the nominated NEA Inspectors to carry out in his presence the necessary Sample/Acceptance tests conforming to the relevant IEC on equipment and materials offered. Routine test report for all the items shall be furnished for the observation of the Inspector.

The acceptance tests as per IEC shall be witnessed by the NEA Inspector.

(a) Dimensional Verification
(b) Dielectric tests
(c) Mechanical Tests
(d) Measurement of resistance of fuse-links

10.11.9 Bid Documentation

10.11.9.1 The following shall be furnished with the offer.

(a) Product Catalogues/Technical literature describing the constructional features, materials used for components, operational feature of the equipment, indicating the model number etc.

(b) Energy withstand capability & a description of the test carried out to measure the same.

(c) Power frequency withstand voltage versus time characteristic curve covering the time range from 0.1 sec. to 24 minutes.

(d) Dimensional drawings of the bracket mounting base, live conductor clamps, earth lead and automatic earth disconnecting device and overall dimensional drawing.

(e) Drawing of name plate to scale incorporating the particulars called for.

(f) Completed Schedule of Guaranteed Technical Particulars

(g) A copy of the Manufacturer's ISO 9001 Certificate conforming to design and manufacture

(h) Type Test Certificates. The Type Test Certificates shall be from an Accredited Independent Testing Authority acceptable to the Purchaser.

(i) Copy of the Governing Standards

(j) Technical Literature in English Language on installation, operation and maintenance with necessary circuit diagrams and drawings.

Government of Nepal
Ministry of Infrastructure Development
Department of Water Supply and Sewerage Management Office
Butwal, Rupandehi

Office Chief

10.11.9.2 Type Test Certificates

Following Type Test certificates conforming to IEC 60282-2, IEC 60060 at a reference frequency of 50 Hz. where applicable shall also be submitted with the offer.

a) Dielectric Tests
b) Temperature Rise Tests
c) Artificial Pollution Tests
d) Mechanical Tests
e) Breaking Tests
f) Interrupting Tests
g) Beam Strength of Porcelain Base

Test Certificates shall clearly identify the equipment concerned showing the manufacturer's identity, Type, Model and Serial Number of the equipment tested. Type Test Report shall include complete drawings and the model/type of the offered Arrester. Type Test Report shall be from a recognized accredited independent testing authority acceptable to the purchaser.

10.12 Fuse Link

10.12.1 Scope

This Specification covers the supply of button head fuse links commonly used in the protection of distribution transformers with the Distribution Cutouts above.

10.12.2 Description

The button-head fuse link shall be fabricated in full compliance with the relevant IEC, or latest revision thereof or any other international standards that ensures at least a substantially equal quality to the standard mentioned above, will also be acceptable.

The fuse link shall have fast characteristics and shall be suitable for protection of distribution transformers. The fuse link shall be supplied in accordance with the type and ratings shown in the bid package.

10.12.3 Tests

The distribution cutout and surge arrester shall be tested in accordance with the relevant provisions of the governing standard.

10.12.4 Bid Documentation

The Bidder shall furnish copies of governing standards for fabrication and testing of fuse links
The Bidder shall furnish copies of catalogue of fuse links.
The Bidder shall furnish a clause-by-clause commentary on specification, specifying compliance and deviations, if any.
The Bidder shall also furnish with the Bid copies of the following data with respect to the fuse links furnished:

a) Time-Current (TC) characteristic curves at 30°C, including minimum melting time and total clearing time.
b) Preloading adjustment factors or curves.
c) Ambient temperature adjustment factors or curve

All data, drawings, catalogues and other technical documents shall be bound separately from the Bid documents

10.13 Distribution Panel Board

10.13.1 Scope

This Specification covers the design, fabrication, testing and supply of Distribution Panel Boards to be used in the Low Voltage Overhead Distribution system of the Nepal Electricity Authority (NEA) to provide overload and short circuit protection for Distribution lines up to Customer Distribution Panel.

10.13.2 Description

The panel board shall be pole-mounted and used in conjunction with pole-mounted distribution transformers to house

moulded case circuit breaker (MCCB) feeding 400/230 Volt circuits.

Government of Nepal
Ministry of Urban Development
Department of Water Supply and Sewerage Management Office
Butwal, Rupandehi
Office Chief

The panel board shall be rectangular in shape with an entrance door in the front of the panel board. The panel board shall be equipped with interior standoffs suitable for mounting MCCB and for supporting cables. The panel board will be fixed to the pole by exterior mounting brackets attached to the back of the panel board. Details of these components shall be as specified in the following text.

The panel board shall be fabricated to prevent ingress of moisture due to rainfall and dripping. The panel board shall be provided with means for natural ventilation.

10.13.2.1 Material

The panel board case and door shall be fabricated out of steel sheet of minimum 2 mm. in thickness and pole mounting brackets shall be fabricated out of mild steel flat of 6 mm. in thickness. The interior standoffs shall be fabricated of steel sheet of sufficient thickness to support installed circuit breaker and cables without lateral movements.

10.13.2.2 Construction

The panel board case and all interior and exterior attachment shall be spot-welded. All welding shall be of the highest quality. The panel boards shall be formed and welded square and all attachments to the interior and exterior surfaces shall be welded square and perpendicular to the panel attached.

The panel board shall be so constructed as to be water tight from blowing of free-falling rain. There shall be no apertures in the panel board case other than those provided for the entrance door, cable fittings, or ventilation. The top extension and bottom shall be so formed to provide a drip edge and prevent water from flowing on the respective under-surfaces.

All individual pieces of metal shall be edge finished prior to assembly to provide surfaces and edges which are free from sharp points and edges. After welding in place, all welds shall be finished to smooth condition.

10.13.2.3 Panel board Front

The front panel shall be fabricated as a separate piece containing the panel board door and doorframe. The front shall be attached to the panel board housing by suitable bolting arrangements to provide a watertight and dust tight seal at the perimeter.

The door shall be equipped with a gasketed removable door, door-handle lock, and suitable hinges. The door and panel frame shall be so fabricated to provide an integrated structure which is warp-resistant and which will maintain dust-tight and watertight seal. Gasketing material shall be heat-resistant and shall retain its resilience over time to precluded degradation of dust-tight and watertight properties.

The insertable (and removable) door handle shall provide a door a locking function. The handle shall be insulated.

The door hinge may be continuous type or separate hinge units. However, the type of hinge furnished must accommodate, and not degrade, the dust-tight and watertight characteristics and must provide adequate door alignment and support over time.

10.13.2.4 MCCB Standoffs

The standoffs shall be shaped and dimensioned to accommodate the MCCBs as required by Bid Packages. The standoffs shall be precisely located.

10.13.2.5 Cable Standoffs

The cable standoffs shall be properly shaped and dimensioned. The standoff shall have the metal edges contoured and smoothed to prevent abrasion of applied cable serving. The standoff shall be located within the panel board to make allowance for cable bending radii and the location of other components.

10.13.2.6 Bus bars

The neutral and phase bus bars shall consist of copper bus bar insulated from the panel board by 600 V porcelain insulators. The copper bus bar shall be of proper size (ampere capacity) and properly dimensioned. The bus bars shall be located within the panel board to provide adequate clearance for the installation and correct functioning of all items.

If it is required to drill or penetrate the panel board back to install 600 V insulators, the outside of the panel board shall be permanently sealed over the attachment to retain water-tightness.

10.13.2.7 Cable Entrance Fittings and Knockouts

Knockouts for cable entrance fittings (bushings) shall be provided in the bottom of the panel board. All necessary cable entrance fittings shall be supplied for proper connection of all circuits to fulfil the requirement of the Bid Package. The fittings shall be designed to be suitable for exposed cables entering the panel board from below and shall secure the cable with inserts to prevent lateral and longitudinal movement of the cables.

The fittings shall be threaded multi-piece construction which when installed securely locks the fittings to the panel board. The fittings may be of metal or polymer material. Metal fittings shall be galvanized or plated as appropriate. The fitting inserts may be single or multi pieces and shall be of material sufficiently elastic and resilient to securely grip the PVC cable sheath without damage. The fitting components shall enable capturing of the inserts to preclude insert creep and fallout due to clamping pressure.

10.13.2.8 Ventilation

The panel board shall be provided with apertures for natural draft ventilation in the panel board bottom and in the top overhang. The ventilation apertures shall be covered with bronze screen materials of a mesh sufficiently to preclude passage of small insects. The edges of the bronze screening shall be securely fastened to the panel board by means of soldering or epoxy adhesive. The mesh shall be protected during panel board fittings to preclude clogging of mesh openings by finished materials.

10.13.2.9 Pole Mounting Bracket

The panel board shall be provided with two (2) pole mounting brackets. The size of poles will be confirmed by the purchaser before manufacturing.

10.13.2.10 Grounding Stud

The panel board shall be provided with a brass grounding stud located in an approved location. The grounding stud shall be fitted to the panel board to insure low resistivity and water tightness of the installation. The grounding stud shall be complete with pressure washer, lock washer, and nuts.

10.13.2.11 Finish

After fabrication, the panel board shall be thoroughly cleaned of all dirt, grease, mill scale, and weld slag on all interior and exterior surfaces and all surfaces of all component. After thorough cleaning of panel board one (1) coat of red oxide metal priming paint and two (2) finish coats of paint color shall be thoroughly applied. The paint color shall be of light grey (RAL 7032). The finish coats shall be of oil based or epoxy paint. Alternatively, powder coating of panel board may also be acceptable.

The bronzed screen ventilation holes, working surfaces of door hinge and door lock, and outside face of grounding stud shall be free from all finishing materials.

10.13.3 Bid Documentation

The following shall be furnished with the offer.

(a) The Bidder shall furnish fabrication drawings showing all views, section, and dimensions of individual components and assembled panel board.
(b) The Bidder shall furnish complete description of all materials to be used, including cable entrance fittings and finishing materials.
(c) The Bidder shall furnish a clause-by-clause commentary on specification, specifying compliance and deviations, if any.
(d) All data, drawings, catalogues and other technical documents shall be bound separately from the Bid documents.
(e) Completed Schedule of Guaranteed Technical Particulars
(f) A copy of the Manufacturer's ISO 9001 Certificate conforming to design and manufacture
(g) Technical Literature in English Language on installation, operation and maintenance with necessary circuit diagrams and drawings.

10.14 Moulded-Case Circuit Breakers (MCCB)

10.14.1 Scope

This specification covers the design, manufacture and testing of Moulded Case Circuit Breakers (MCCB) used with Distribution Panel Board in the Low Voltage Overhead Distribution system of the Nepal Electricity Authority (NEA) to provide overload and short circuit protection for Distribution lines up to Customer Distribution Panel

10.14.2 System Parameters

a)	Nominal Voltage	400/230V, 3 Phase and Neutral
b)	System Highest Voltage	440/250V, 3 Phase and Neutral
c)	System frequency	50Hz
d)	Method of Earthing	Solidly earthed neutral
e)	System fault current	25kA

10.14.3 Service Condition

a)	Ambient temperature	-5 to 55 deg. C
b)	Annual average ambient temperature	30 deg. C
c)	Maximum relative humidity	99%
d)	Environmental condition	Humid Tropical climate
e)	Operational altitude	Up to 3000m above msl
f)	Isokeraunic (Thunder day) level	90 days
g)	Solar Radiation	1.6kW/m2

Government of Nepal
Ministry of Infrastructure Development
Department of Water Supply and Sewerage Management Office
Water Supply Installation Project

Office Chief

10.14.4 Applicable Standards

The equipment and components supplied shall be in accordance with the latest editions of the standards IEC 60947 and amendments thereof and the NEA Specifications specified hereafter.

10.14.5 Technical Parameters

10.14.5.1 Minimum Technical Requirements

S.N.	Description	Unit	Requirements
1	No. of Poles		3
2	Rated frequency	Hz	50
3	Rated operational voltage (Ue)	V	400/230
4	Rated insulation voltage (Ui)	V	750
5	Impulse withstand voltage (Uimp)	kV	8
6	Continuous Current Rating (In)	A	80, 160, 250, 320, 500
7	Ultimate Short Circuit Breaking Capacity (Icu) (up to 100 A)	kA	25
8	Ultimate Short Circuit Breaking Capacity (Icu) (above 100 A)	kA	50
9	Operating Short Circuit Breaking Capacity (Ics)		50 % of Icu
10	Utilization Category		A
11	Rated duty		uninterrupted
12	Trip device		Thermal adjustable magnetic
13	Rated current adjustment		(0.8-1)In
14	Instant opening current adjustment		10 x In
15	Mechanical Life Operation		>15000
16	Electrical Life Operation		>10000
17	Line load reversibility features		Yes
18	Interrupting Capability		(IEC category P2)
19	Thermal Rating declared at 50 deg C		Yes
20	Operating Range		-5 to 55 deg. C
21	Creepage distance suitable for		Pollution Degree 3 and suitable for isolation
22	Suitable for isolation		Yes
23	Trip Characteristics		inverse time and instantaneous
24	Universal Accessory Fitting		Yes
25	External Accessory		Rotary Operating Handle (Extended for >200A) Suitable Extended Terminals Phase Barriers Mounting Screws

10.15 Steel Tubular Pole

10.15.1 Scope

This Specification covers the design, fabrication, testing and supply of swaged type galvanized steel tubular poles to be used to support overhead electric lines and equipment.

10.15.2 Description

10.15.2.1 The steel tubular pole shall be manufactured and tested in accordance with IS:2713. The poles shall be fabricated of seamless tubes of suitable lengths as specified in **Table 1** made out of welded tubes, swaged and joined together. The diameters of various sections of the fabricated pole shall be as specified therein. A bid not conforming to the requirements of **Table 1** shall be rejected as being non responsive.

10.15.2.2 There are some numbers of poles which shall be of folding type. The folding type poles shall be fabricated in such a way that the bottom section and middle section of the poles could be securely fixed by two sets of galvanized nuts/bolts of suitable size and length at 90° each other. All other design requirements and parameters for folding type poles shall be as per section above and IS:2713.

10.15.2.3 The separate galvanized steel pole cap shall be provided with top section of the pole. The bottom section of the pole shall be provided with a base plate. The base plate shall be square of size 300x300 mm and 10 mm thick and it shall be welded at the bottom of the pole. The base plate shall have a hole of dia. approx. 50 mm in the center, for draining out of water.

10.15.2.4 The total supply quantity of steel tubular poles (total of non-folding type and folding type) are given in the Price Schedule. Supply quantity of folding type poles shall be finalized after pre- construction survey.

10.15.3 Material

1.1 The poles shall be fabricated from steel having tensile strength not less than 410 N/mm². The pole shall be composed of three sections in diminishing diameters and minimum diameter and thickness and lengths of poles shall be as shown in **Table below.**

1.2 The steel tubes shall confirm to the requirements of IS:2713, or latest revision thereof or other recognized international standards that ensures at least a substantially equal quality to the standard mentioned above.

4. **Manufacture**

4.1 All tubes forming the part of the pole shall be made from hot finished seamless or continuously welded steel in accordance with IS 2713, or equivalent international standards. Following tolerances shall be maintained.

a) Tolerance on outside diameter: +/- 1%

b) Tolerance on length: +/- 40mm on any section

+/-25mm on overall length c) Tolerance on weight: No negative tolerance

d) Tolerance on thickness: No negative tolerance

e) The out-of-straightness of the finished pole shall not exceed 1/600 of its length.

4.2 All welding of the poles shall be carried out at the manufacturers' plant.

4.3 Each section of the pole shall have only one longitudinal weld. No circumferential joints/welds of the tubes are permitted. All welds shall be capable of withstanding, without failure or cracking the stresses in a pole when subjected to its ultimate design loads.

4.4 The pole shall have hole configurations and sizes as shown in the drawings attached to this specification. The hole sizes and the locations of the hole must however be confirmed with the Project prior to manufacture.

5. **Corrosion Protection**

5.1 All sections of the pole shall be galvanized both internally and externally. Galvanizing shall be applied by the hot dip process, and shall be done in single bath (single dip) to result in a uniform thickness both internally and externally. Galvanizing of the poles shall be done after completion of fabrication process. Drilling, punching, cutting, bending and removal of burrs shall be completed before galvanizing. The preparation for galvanizing and the galvanizing process shall not adversely affect the mechanical properties of the material being coated. All galvanizing shall be in accordance with ISO 1461 or IS:4736 or an equivalent international

standard, and shall result in uniform thickness galvanization and be free from defects. The pole cap and the base plate shall also be galvanized.

5.2 The minimum thickness of the zinc coating shall not be less than 500 g/m² (equivalent to 70 microns) of zinc for all surfaces of steel including the base plate and the pole cover.

6. **Marking of Pole**

6.1 The pole shall have an identification marked with indelible paint on the pole at a position approximately 3.5 m. from the butt end, which is clearly and indelibly marked with:

a) Date of manufacture and identification mark of manufacture.

b) Length of pole in meters and its design working loads as defined in this specification. c) Name of the Employer

d) Contract Number.

6.2 The pole shall be marked with a permanent horizontal line at a point 1/6th of the pole height from the butt end of the assembled pole.

7. **Earthing Lug, Base Plate and Pole Cap**

Each pole shall be provided with earthing lug at 300 mm above the ground level. Separate pole cap shall be provided for each pole. The plate for pole cap shall be of 3 mm. minimum thickness.

8. **Tests**

8.1 The following test(s) shall be performed on finished poles. All testing shall be fully documented and certified test reports shall be provided to the Project.

- Test for dimensional and structural properties, and for the physical requirements of the finished poles
- Test for galvanization
- Tensile test and chemical analysis test
- Deflection test
- Permanent set test, and

- Drop test.

8.2 Poles selected for tests shall be a representative sample from each lot. The number of poles selected for conducting deflection, permanent set and drop tests shall be as follows:

S.N.	Lot size	No. of poles
1.	Up to 500	5
2.	501-1000	8
3.	1001-2000	13
4.	2001-3000	18
5.	3001 and above	20

8.3 The number of poles selected for conducting tensile test and chemical analysis tests shall be as follows:

S.N.	Lot size	No. of poles
1.	Up to 500	1
2.	501-1000	2
3.	1001-2000	3
4.	2001-3000	4
5.	3001 and above	5

8.4 The above test shall be performed as per IS:2713 or other recognized international standards. The following particulars shall be recorded:

a) Manufacturer's name and plant location;
b) Batch No. of steel plate or tubing;
c) Test date;
d) Pole type;
e) Dimensions of pole;
f) Increments of load and the deflections at each increment of load;
g) Permanent deflection;
h) Load of failure;

For deflection test, each pole shall be rigidly supported for a distance from the butt end equal to the length the depth to which it to be planted in the ground. It shall then be loaded as cantilever and the appropriate deflection load applied at right angle of the axis of pole 300 mm from the top of the poles for poles up to 9m length and 600 mm for poles over 9m length. The temporary deflection at the point of application of the applied load shall not exceed 157.5 mm

8.6 The permanent set test shall be carried out immediately after the deflection test, on the same test sample. After application of the proper load, the permanent set measured from the zero position at the point of application of load after the release of the applied load shall not exceed 13 mm.

8.7 To perform the drop test, the pole shall be dropped vertically with the bud end downward, three times in succession from a height of 2 m onto a hardwood block 150 mm thick laid on a concrete foundation. The pole shall not show any signs of telescoping or loosening of joints.

8.8 Should any of the poles first selected fail to pass any of the tests specified above, two further poles shall be selected for testing from the same batch i.e. same pole length manufactured on the same day from the same steel plate or tubing in respect of each failure. Should one or both these additional poles fail, the test material represented by the test samples shall be deemed as not complying with this specification.

9. Quality Assurance Program

9.1 Along with the Bid the Bidder shall furnish quality assurance program of the manufacturer which includes the Quality System and the Quality Plans, which shall include, among others, information to meet the following requirement, failing which the Bid shall be liable for rejection.

i. The structure of the organization;
ii. The duties and responsibilities assigned to staff ensuring quality of works;
iv. The system for purchasing, taking delivery and verification of materials;
v. The system for ensuring quality of workmanship;
vi. The quality assurance arrangement shall conform to relevant requirements of ISO9000;
vi. Statement giving list of important raw materials, names of manufacturer for the raw materials, list of standards according to which the raw materials are tested, list of test normally carried out on raw materials;
vii. List of manufacturing facilities available;
viii. List of areas in manufacturing process, where stage inspections are normally carried out for quality control and details of such tests and inspections;
ix. List of testing equipment available with the manufacturer for final testing of equipment specified and the test plant limitation, if any, vis-à-vis the type, special, acceptance and routine tests specified in the relevant standards.

9.2 The manufacturer shall perform, among others, the following inspections/test on each consignment of raw steel, prior to fabrication. A certificate shall be provided to the Employer showing the test results:

i. Visual, dimensional and mechanical tests, to identify the steel meets the required strength/grade ensure compliance with the relevant Standards, and to ensure the absence of rust and surface imperfections. If the steel does

meet the strength or grade required, the batch shall be rejected.

ii. Dimensional tests to ensure that the material is within the production tolerances of IS 2713 or BS 4360 and BS 6323 or equivalent Standards. One sample shall be taken from each batch for which a certificate is provided. If the first sample fails the test, a second sample shall be taken. If the second sample fails the test, the batch shall be rejected.

10. Packing

Poles shall be stacked together and banded securely to ensure that each individual bundle does not break or the shifting of individual poles does not take place during transportation and handling. Any loose items shall be suitably banded together or packed to avoid loss during transportation and storage.

11. Bid Documentation

11.1 The Bidder shall provide with the Bid copies of the governing standards for selection of tubing, fabrication and testing of Steel Tubular Poles and copies of all other relevant standards referenced therein.

11.2 The Bidder shall provide a complete design, description and certified dimensional drawings of each type of pole.

11.3 A clause-by-clause commentary on specification, specifying compliance and deviations, if any.

11.4 All data, drawings, catalogues and other technical documents shall be bound separately from the Bid documents.

Table 1: Pole Attributes

S.N.	Description	Unit	Value	
			For 11m Pole	For 9m Pole
1	Overall Length	m	11	9
2	Pole Designation		410 SP-52	410 SP-31
3	Section Length			
3.1	Top (h1)	m	2.7	2.0
3.2	Middle (h2)	m	2.7	2.0
3.3	Bottom (h3)	m	5.6	5.0
4	Outside Diameter			
4.1	Top (h1)	mm	114.3	114.3
4.2	Middle (h2)	mm	139.7	139.7
4.3	Bottom (h3)	mm	165.1	165.1
5	Thickness			
5.1	Top (h1)	mm	3.65	3.65
5.2	Middle (h2)	mm	4.50	4.50
5.3	Bottom (h3)	mm	4.50	4.50
6	Crippling Load	kgf	307	367
7	Approximate Weight (excluding the weight of galvanization, base plate and pole cap)	kg	175	147
8	Application of load from top of pole	m	0.6	0.3
9	Planting Depth	m	1.8	1.5

10.16 Pre-Stressed Concrete (PSC) Pole

10.16.1 Scope

These specifications apply to design, manufacture, and testing of rectangular pre-stressed concrete poles for use in electrical distribution.

10.16.2 Description

The pre-stressed concrete pole shall be designed and fabricated in full compliance with IS:1678-1978, or latest revision thereof or any other national or international standards that ensures at least equal or better quality to the standard mentioned above, will also be acceptable.

Office Chief

10.16.3 Load

The working loads of various pole categories are as per the design parameters. The design ultimate strength shall be calculated using a safety factor of 2.5. Pole Attributes are listed in the design parameters.

10.16.4 Materials

10.16.4.1 **Cement**

Cement to be used in the manufacture of pre-stressed concrete poles shall be ordinary for rapid hardening Portland cement confirming to IS: 269-1976 (Specification for ordinary and low heat Portland cement) or IS: 8041 E-1978 (Specification for rapid hardening Portland cement).

10.16.4.2 **Aggregates**

Aggregates to be used for the manufacture of pre-stressed concrete poles shall confirm to IS:383 (Specification for coarse and fine aggregates from natural sources for concrete) The nominal maximum sizes of aggregates shall in no case exceed 12 mm.

10.16.4.3 **Water**

Water should be free from chlorides, sulphates, other salts and organic matter. Potable water will be generally suitable.

10.16.4.4 **Admixture**

Admixture should not contain Calcium Chloride or other chlorides and salts which are likely to promote corrosion of pre-stressing steel. The admixture shall conform to IS: 9103.

10.16.4.5 **Pre-stressing Steel**

The pre-stressing steel wires should confirm to the IS 1785 OR IS 6003. The plain wire should be of 4 mm in diameter with a guaranteed ultimate strength of 175 kg/mm^2. The strands shall be made from cold-drawn non-alloy steel (high carbon content) wires. The seven-wire strand consists of a group of wires arranged in stranded formation and shall have the following properties. The seven-wire strands shall confirm to IS:6006-1983, or latest revision thereof or any other equivalent national or international standards.

Geometrical Properties:

Type of material:	Seven-wire strand
Nominal diameter of strand	7.9 mm (7/2.6mm)
Nominal cross-sectional area of strands	37.4 mm^2

Mechanical Properties:

Nominal mass of strand:	64.50kN
Minimum breaking load:	294 g/m
0.2% proof load	54.70 kN

Long Term Behavior:

Maximum relaxation after 1000 h of operation at initial load equivalent to 60%, 70% and 80% of breaking load shall not be higher than 1.0%, 2.5% and 4.5% respectively.

10.16.4.6 **Concrete Mix**

Concrete mix shall be designed to the requirements laid down for controlled concrete (also called design mix concrete) in IS: 1343-1980 (Code of practice for pre-stressed concrete) and IS: 456 – 1978 (Code of practice for plain and reinforced concrete).

10.16.5 Design

10.16.5.1 The poles shall be as per following design parameters and the dimensions shall be shown in Drawing.

Design Parameters:

Concrete mix:	M40
Minimum diameter of pre-stressing wire:	Refer Table 2
Working Load:	Refer Table 1
Depth of Plantation:	Refer Table 2
Point of Application of Load	Refer Table 2

10.16.5.2 The minimum strength of concrete in the pole shall meet the requirements laid down in IS:1343- 1960 and IS:456-1964 or in any other equivalent national or international standards.

10.16.5.3 The pre-stressing strands shall be accurately positioned and satisfactorily protected against the formation of rust or other corrosion prior to the placement of the concrete. All pre-stressing strands shall be free from loose rust, dirt, grease, oil and other lubricants or substance that might impair their bond with the concrete.

10.16.5.4 The cement employed shall be the Ordinary Portland Cement (OPC), which shall conform to the chemical and physical requirements as set forth in IS 269, or any other equivalent national or international standards.

10.16.5.5 The amount of concrete cover on the outside of the pre-stressed reinforcement shall be not less than 20 mm.

10.16.5.6 Concrete shall be compacted by spinning, vibrating, shocking or other suitable mechanical means. Hand compacting shall not be permitted.

10.16.5.7 The concrete shall be covered with a layer of sacking, canvass, Hessian or similar absorbent material and kept constantly wet up to the time when the strength of concrete is at least equal to the minimum

strength of concrete at transfer of pre-stress. Thereafter, the pole may be removed from the mould and watered at intervals

Government of Nepal
Ministry of Infrastructure Development
Department of Water Supply and Sewerage Management Office
Butwal, Rupandehi
Office Chief

to prevent surface cracking of the unit the interval should depend on the atmospheric humidity and temperature. The pre-stressing wires shall be detentioned only after the concrete has attained the specified strength at transfer (i.e. 200 or 210 kg/cm² as applicable). The cubes cast for the purpose of determining the strength at transfer should be coursed, a sear as possible, under condition similar to those under which the poles are cured. The transfer stage shall be determined based on the daily tests carried out on concrete cubes till the specified strength indicated above is reached. Thereafter the test on concrete shall be carried out as detailed in IS: 1343(code of practice for pre-stressed concrete). The manufacture shall supply, when required by the owner or his representative, result of compressive test conducted in accordance with IS: 456 (Code of practice for plain and reinforced concrete) on concrete cubes made from the concrete used for the poles. If the manufacture so desired, the manufacture shall supply cubes for test purpose and such cubes shall be tested in accordance with IS: 456 (Code of practice for plain and reinforced concrete).

10.16.5.8 The pole shall include cast-in holes. Typical hole patterns are shown in the drawings. Hole patterns must be confirmed with the NEA prior to manufacture.

10.16.5.9 All poles shall be unpolished but free of roughness, chips, excess cements, and other surface irregularities. All poles shall present a straight and symmetrical appearance after erection. The corners of all the poles shall be rounded so that they do not present a dangerously sharp edge, which could cause tearing or excessive wearing of safety belts.

10.16.5.10 All poles shall be provided with lifting hooks at two points for loading and unloading of poles.

Table 1

Working Load

S.N.	Pole Length (m)	Design Load (kgf)
1	11	350
2	9	200

Table 2

Pole Attributes

S.N.	Description	Unit	9m PSC Pole	11m PSC Pole
1	Standard		IS 1678	IS 1678
2	Length of PSC Pole	m	9	11
3	Size	mm	300*150*140	400*180*150
4	Approximate Weight	kg	680	1150
5	Working Load	kgf	200	350
6	Ultimate Load	kgf	500	875
7	Concrete Grade		M40	M40
8	Pre-stressing Wire			
8.1	Diameter	mm	7.9 mm (7/2.6mm)	7.9 mm (7/2.6mm)
8.2	Standard		IS 1785	IS 1785
9	Factor of Safety		2.5	2.5
10	No of tensioned wire		6	8
11	No of stirrups (6mm MS)		12	12
12	Depth of Plantation	m	1.5	1.8
13	Point of Application of load from pole top	m	0.6	0.6

Government of Nepal
Ministry of Infrastructure Development
Department of Water Supply and Sewerage Management Office
Water Supply and Sewerage Management Office
Butwal, Rupandehi

Office Chief

10.16.6 Tests

Definition of various types of loads:

Working load = Expected Load

Design Working Load = Expected Load x Factor of Safety (FOS)

Ultimate Transverse Load (UTL) = Load when applied at specified point of the pole, the failure occurs.

Minimum Ultimate Transverse Load (MUTL) = Load when applied at specified point of the pole, the first crack appears.

Design Transverse Load (DTL) = Design Working Load

Design Ultimate Transverse Load (DUTL) = Design load at the transverse direction at which the first crack expected to appear (given by the Designer after calculation)

The **Design Ultimate Transverse Load (DUTL)** is less or equal to Ultimate Transverse Load

10.16.6.1 Transverse Strength Test

The pole shall be rigidly supported at the butt end for a distance equal to the specified planting depth. The load shall be applied at a point specified in Table 2 from the top of the pole and shall be steadily and gradually increased to the design transverse load until the occurrence of the first crack. The deflection is then measured. Prior to the application of the design transverse load there shall be no crack.

The load shall then be reduced to zero and increased gradually to a load equal to the first crack load plus 10% of the minimum ultimate transverse load, and held for 2 minutes. This procedure shall be repeated until the load reaches the value of 80% of the minimum ultimate transverse load and thereafter increased by 5% of the minimum ultimate transverse load until failure. Each time the load is applied, it shall be held for 2 minutes. The ultimate transverse load shall not be less than the design ultimate transverse load.

10.16.6.2 Measurement of Cover

The cover shall be measured at 3 points, one within 1.8m from the butt end of the pole, second within 0.6m from the top and the third at the intermediate point. The mean value of the measured cover should not differ by more than +/-1mm from the specified value, and the individual value should not differ by more than+/-3mm from the specified value.

10.16.6.3 The number of poles selected for testing and their conformity criteria shall be as follows:

Lot Size	Sample Size	Permissible No. of Defective Samples	No. of Poles for Transverse Strength Test
Up to 100	10	1	2
101 to 200	15	1	3
201 to 300	20	2	4
301 to 500	25	3	5

10.16.6.4 All the poles selected in 5.3 shall be tested for overall length, cross-section and up-rightness. The tolerance shall be +/-15mm on overall length, +/-3mm on cross-sectional dimensions, and 0.5% on uprightness.

10.16.6.5 The number of poles which do not satisfy the requirements of overall strength, cross-section and uprightness shall not exceed the number given in 5.3. If the number of such poles exceeds the corresponding number, all poles in the lot shall be tested for requirements, and those not satisfying the requirements shall be rejected.

10.16.6.6 All the poles tested for transverse strength test shall satisfy the requirements of the test. If one or more poles fail, twice the number of poles originally tested shall be selected from those already selected and subjected to test. If there is no failure among these poles, the lot shall be considered to have satisfied the requirements of the test.

10.16.7 Marking

The poles shall be cleanly and indelibly marked with the following:

a) Month and year of manufacture, at approximately 3m from the butt end;
b) Specified working load in kg, at approximately 3m from the butt end; and
c) The design lifting point.
d) The pole should be marked with the Identification of the Project/Contract at approximately 5m from the butt end.

10.16.8 Bid Documentation

10.16.8.1 The Bidder shall furnish following documents together with Bid;

a. Two (2) clear copies of the standards, governing fabrication and testing of pre-stressed concrete poles and two (2) clear copies of other standards indicated in the specifications.
b. Two (2) clear copies of detailed design and drawings of each type of pole.
c. Two (2) clear certified copies of all tests performed on similar poles of same sizes and similar working loads.
d. A clause-by-clause commentary on specification, specifying compliance and deviations, if any.

10.16.8.2 The Bidder shall provide the following details:

a) Pole dimensions in cross-section and pole taper;
b) Location and size of pre-stressing strands;
c) Hole locations;
d) Design ground line;
e) Marking of the lifting point;
g) Minimum ultimate transverse load;
h) Transverse load at first crack
i) Concrete design mix and cement specification
j) Specifications of the pre-stressing strands, their tensile strength and sizes

10.17 Porcelain Insulators and Fittings

10.17.1 Scope

This Specification covers the Type Test, fabrication and supply of pin insulators, disc insulators stay insulators, disc insulator fittings and insulator pins as herein specified for use on overhead power line construction.

10.17.2 General

10.17.2.1 General Requirements of Insulators

Insulators shall be fabricated and tested in accordance with the Standards referenced for each type of insulator or equivalent standards.

The Type Test shall be conducted in the recognized laboratory.

Porcelain shall be sound, free from defects, thoroughly vitrified and smoothly glazed. The glaze shall be brown in color. The glaze shall cover all exposed parts of the insulators.

The design of insulators shall be such that stresses due to expansion and contraction in any part of the insulator shall not lead to deterioration. The porcelain shall not engage directly with hard metal.

The cement used in construction of insulators shall not give rise to chemical reaction with metal fittings and its thickness shall be as uniform as possible.

The insulators should be manufactured in automatic temperature-controlled kilns to obtain uniform baking and better electrical and mechanical properties.

The preferred make of disc, pin and stay insulators and fittings are Allied Ceramics Pvt. Ltd., BHEL, Aditya Birla Insulators Ltd., Hindustan Chemicals Ltd. or equivalent reputed.

10.17.2.2 General Requirements of Disc Insulators fittings

The disc insulator fittings shall be designed, manufactured and tested in accordance with IS:
2486 or any other national or international standards that ensures at least equal or better quality to the standard mentioned above, will also be acceptable.

The disc insulator fittings shall be supplied with ball and socket couplings and twisted straps. The insulator fittings shall conform to the shape and dimension as per the governing standards

Disc insulator fittings like ball and socket, nuts and bolts shall be made of hot rolled steel and the twisted cross arm strap shall be made of MS sheet metal. Cotter bolts and U-bolts shall be of galvanized steel. Cotter pins shall be of stainless steel.

All forgings and castings shall be of good finish and free from flaws and other defects. The edges on the outside of fittings, such as the ball socket and holes, shall be rounded. The nominal dimensions of the ball and socket, ball eye and twisted cross arm straps, shall be as per the governing standards.

All ferrous fittings and the parts other than those of stainless steel, shall be hot dip galvanized as per IS: 2629 or equivalent

international standards.

Government of Nepal
Ministry of Infrastructure Development
Department of Water Supply and Sewerage Management Office
Water Supply and Sewerage Management Office
Butwal, Rupandehi

Office Chief

10.17.2.3 General Requirements of Insulator Pins

The insulator pins specified herein shall be fabricated from hot rolled steel. The pin shall be a single piece obtained preferably by the process of forging. It shall not be made by jointing, welding, shrink fitting or any other processes from more than one piece of material. It shall be of good finish free from flaws and other defects. The finish of the collar shall be such that a sharp angle between the collar and the shank is avoided.

All ferrous pins, nuts and washers except those made of stainless steel shall be hot dip galvanized. The threads of nuts shall be cut after galvanizing and shall be well oiled and greased. The galvanizing shall conform to IS 2629-1985 or equivalent national or international standard.

All insulator pins shall be reasonably smooth on all surfaces and free of sharp projections.

10.17.3 Specific Requirements

10.17.3.1. Pin Insulator

The pin insulator shall be manufactured and tested in accordance with IS: 731 and IS:3188 or the latest version thereof or any other national or international standards that ensures at least equal or better quality to the standard mentioned above, will also be acceptable. The lead thread shall be compatible with the insulator pin specified in these documents.

The pin insulator shall have following ratings and features:

S.N.	Description	Unit	11 kV pin insulator
1	Highest system voltage	kV	12
2	Rated voltage	kV	11
3	Creepage distance (minimum)	mm	265
4	Wet power frequency withstand voltage	kV	35
5	Impulse withstand voltage	kV	75
6	Puncture power frequency voltage (minimum)	kV	105
7	Visible discharge voltage (Effective)	kV	9
8	Cantilever strength	kN	5
9	GI pin head		Small

10.17.3.2 Disc Insulator

The disc insulator shall be manufactured and tested in accordance with IS: 731 or latest version thereof or any other national or international standards that ensures at least equal or better quality to the standard mentioned above, will also be acceptable.

The disc insulator shall be ball and socket fitting type. The disc insulator shall have the following ratings and features:

S.N.	Description	Unit	Value
1	Highest system Voltage	kV	12
2	Rated Voltage	kV	11
3	Porcelain Diameter (minimum)	mm	255
4	Spacing	mm	145
5	Creepage Distance (minimum)	mm	320
6	Power Frequency Puncture withstand Voltage		1.3 x Actual dry flashover voltage
7	Wet Power Frequency Withstand Voltage	kV	35
8	Impulse Withstand Voltage	kV	75
9	Puncture Power Frequency Voltage (minimum)	kV	105
10	Visible Discharge Voltage	kV	9
11	Mechanical Strength	kN	45
12	Ball and Socket Size		16 mm B
13	Applicable Standard for Special Characteristics		IS: 3188

10.17.3.3 Stay Insulator

The stay insulator shall be manufactured and tested in accordance with IS: 5300 or latest version thereof or any other national or international standards that ensures at least equal or better quality to the standard mentioned above, will also be acceptable.

The stay insulator shall have the following ratings and features:

S.N.	Description	Unit	Stay Insulator for 11 kV and 400V Line
1	IS Designation		A
2	Length	mm	90
3	Diameter	Mm	65
4	Cable Hole Diameter	mm	16
5	Creepage Distance (minimum)	mm	41
6	Minimum failing load	kN	44
7	Power Frequency Withstand Voltage		
7.1	Dry	kV	18
7.2	Wet	kV	8

10.17.3.4 Insulator Pins

The insulator pins to be supplied shall conform to IS: 2486 or equivalent international standards and to the shape and dimensions shown in the drawings contained in this specification. The insulator pin shall be furnished with a spring steel split lock washer and nut assembled on the insulator pin. The ratings and features of the insulator pins shall be as follows:

S.N.	Description	Unit	Required ratings/features for 11 kV
1	Head type		Small S165P
2	Total length	mm	315
3	Stalk length	mm	165
4	Shank length	mm	150
5	Minimum failing load	kN	5
6	Applicable standard		IS: 2486 or equivalent international standard.

The insulator pins shall be compatible with the insulators specified above.

10.17.3.5 Disc Insulator Fittings

Disc insulator fittings like Ball and socket, nuts, bolts shall be made of hot rolled steel and the twisted cross arm strap shall be made of MS sheet metal. Cotter bolts and U-bolts shall be of galvanized steel. Cotter pins shall be of stainless steel.

All forgings and castings shall be of good finish and free from flaws and other defects. The edges on the outside of fittings, such as the ball socket and holes, shall be rounded. The nominal dimensions of the ball and socket, ball eye and twisted cross arm straps, are given in Drawings. The ultimate strength of the fittings shall not be less than 41 KN.

All ferrous fittings and the parts other than those of stainless steel, shall be hot dip galvanized as per IS: 2629-1985 or equal internationally recognized standards.

10.17.4 Marking

Each insulator shall be legibly and indelibly marked to show the following:

a) Name or trademark of manufacturer.
b) Year of manufacture.
c) Minimum failing load in Newton
d) Name of Employer

Markings on porcelain shall be printed and shall be applied before firing.

10.17.5 Tests

The insulators and fittings shall comply with the type tests and routine tests as per relevant governing standards.

10.17.6 Bid Documentation

The Bidder shall provide with the Bid two (2) clear copies of the governing standards for fabrication and testing of pin insulator and insulator pin and two (2) clear copies of all other relevant standards referenced therein.

The Bidder shall provide certified type test results of pin insulator and insulators pin as required by governing standards.

The Bidder shall provide standard catalogue and certified dimensional drawings of pin insulator and insulator pins.
A clause-by-clause commentary on specification, specifying compliance and deviations, if any.
All data, drawings, catalogues and other technical documents shall be bound separately from the Bid documents.

Government of Nepal
Ministry of Infrastructure Development
Department of Water Supply and Sewerage Management
Water Supply and Sewerage Management Office
Butwal, Rupandehi

Office Chief

10.18 Stay Sets

10.18.1 Scope

This Specification covers the fabrication and supply of adjustable threaded, galvanized, ferrous, stay sets and nuts for use in overhead line construction.

10.18.2 Description

10.18.2.1 The stay set shall consist of mild steel; galvanized stay rod; stay tightener or adjustable head complete with stay plate a thimble of suitable dimensions

10.18.2.2 The stay rod shall be fabricated of mild steel of minimum tensile strength of 4200 kg/sq.cm. The other technical features and dimensions are given in table attached herewith.

10.18.2.3 The stay tightener shall be made of mild steel of minimum ultimate tensile strength of 42,000kg/sq.cm. The thimbles shall be made of 1.219mm (18 SWG) GI sheet, and shall be suitable for terminating steel stay wire with a preformed grip.

10.18.2.4 The stay plate shall be square type MS plate of dimensions as mentioned in Table herewith. The plate shall have a matching hole at the center to fit the end of the stay rod.

10.18.3 Fabrication

10.18.3.1 The stay rod and nut shall be fabricated to the shape and dimensions shown in table attached herewith.

10.13.3.2 The thread form at the threaded end of the rod, and that of the accompanying nut, shall be optional with the supplier. However, it shall be the responsibility of the Supplier to supply the stay rod with a thread form that shall sustain the rated loads specified in table without creep or stripping over the full life of the rod material at specified diameter.

10.13.3.3 After fabrication, the stay rod and nut shall be hot-dip zinc galvanized in accordance with IS 2629-1985, latest edition, or to an equivalent hot-dip galvanizing standard which produces equal or superior result.

10.13.3.4 After galvanizing, the nut and rod threading shall be such that the nut may be run the full length of the thread without the use of tools.

10.18.4 Tests

10.18.4.1 Apart from the tests indicated in the relevant referenced standard of steel, the stay set shall undergo following tests:

-Visual Inspection.

-Verification of dimensioned.

–Tensile strength: The stay set assemblies shall withstand a minimum tensile load specified in Table 1.

-Bend test: The stay rod shall be bend-tested over a mandrel of 19 mm millimeter through an angle of 90 degrees at any point in the un-threaded section of the rod without fracture of the steel. Temperature of the test shall be 68 degrees Fahrenheit (22.5 deg Celsius).

10.18.5 Bid Documentation

10.18.5.1 The Bidder shall furnish with the Bid a complete description of the stay sets proposed to be supplied including, but not limited to, steel classification of base metal, detailed drawings showing shape, dimensions, and threading certified type test results as required by paragraph 4 herein, the identity of the proposed manufacturer, and manufacturers catalogue number, plus catalogue cuts. The technical data furnished shall be bound separately from the Bid Document.

Table 1: Ratings and Features of Stay Sets

S.N.	Description	Unit	Stay Sets for 11 kV and 0.4 kV line
1	Length of stay rod	m	1.8
2	Diameter of stay rod	mm	16
3	Ultimate tensile strength of stay rod and turn-buckle	kg/cm^2	4200
4	Minimum breaking load	kg	6,433
5	Length of threaded portion	mm	300
6	Thimble shape		Suitable for 7/12 mm stay wire
7	Thimble section		18 SWG min.
8	Stay plate section	mmxmmxmm	300x300x6
9	Eyebolt length	mm	300
10	Eyebolt diameter	mm	16

10.19 Stay Wire

10.19.1 Scope

This Specification covers the fabrication and supply of zinc-coated steel wire for use in overhead power line as stay wire

ropes for line supports (poles).

Government of Nepal Ministry of Infrastructure Development Department of Water Supply and Sewerage Management Office Water Supply and Sewerage Management Office Butwal, Rupandehi

Office Chief

10.19.2 Description of Strands

The steel strand shall be fabricated in accordance with IS 2141 or an equivalent international standard. The steel wire strand shall have a left-hand lay. The steel wires shall have no joint throughout the whole length. Strands shall be uniform and shall have no defects such as cracks, dust encapsulation or crevices. Further details are given in Table herein.

10.19.3 Packing

The steel wire strand shall be furnished in reels holding minimum of 100 kg. Each reel shall have a weather-resistant tag securely attached showing the length, nominal diameter, number of individual wires, grade of the strand, and the class of zinc coating.

10.19.4 Bid Documentation

10.19.4.1 The Bidder shall furnish the following technical data with the Bid:

a) If the material to be offered is to be manufactured in accordance with the specified B.S. standard, full technical data for the material and the identification of the manufacturer.

b) If the material offered to be manufactured in accordance with an equivalent standard, two (2) clear copies of that standard shall be furnished in addition to the data required in

(a) above.

All technical data furnished shall be bound separately from the Bids.

10.19.5 Tests

The testing of individual wires and complete conductor shall be in accordance with the nominated standards.

Table: Ratings and Features of stay wire

S.N.	Description	Unit	Stay Wire for 11 kV and 0.4 kV Line
1	Steel Wire Size	(Nos of wire/SWG)	7/12
2	No. of Wire	Nos	7
3	Diameter of Each wire	mm	2.64
4	Strand Diameter (Overall)	mm	7.8
5	Overall Cross-Sectional Area	mm^2	44.19
6	Steel Quality		Gr.700
7	Minimum Tensile Strength of Steel	N/mm^2	700
8	Min. Breaking load of single wire	kN	3.71
9	Min. Breaking load of strand	kN	26
10	Approximate Weight	kg/km	300
11	Minimum weight of Wire in each reel	kg	100
12	Left hand Lay	Yes/No	Yes
13	Minimum Thickness of Zinc Coating	g/m^2	230

10.20 11 kV Air Break Switch

10.20.1 Scope

This specification provides for manufacture, testing at works and delivery for supply of 11 kV AB switches. The 11 kV AB switches shall conform to IS: 9920 (Part-I to IV)

10.20.2 AB Switches

The 11KV Air Break Switches are required with two poles in each phase. The AB Switches shall be supplied complete with phase coupling shaft, operating rod and operating handle. It shall be manually gang operated and vertically break and horizontal mounting type.

The AB Switch shall be designed for a normal current rating of 400 Amps and for continuous service at the system voltage specified as under: 11 KV AB Switch: 11KV + 10% continuous 50 C/s solidly grounded earthed neutral system. The length of break in the air shall not be less than
400 mm for 11KV AB Switches.

The 11KV AB Switches are required with post insulators. The AB switches should be suitable for mounting on the structure. The mounting structure will be arranged by the purchaser separately. However, the AB Switches shall be supplied with base channel for mounting on the structure which will be provided by the purchaser. The phase to phase spacing shall be 750mm in case of 11KV AB Switches.

10.20.3 Post Insulators

The post insulators should conform to the latest applicable Indian standards IS: 2544. Creepage distance should be adequate for highly polluted outdoor atmosphere in open atmosphere. The porcelain used for manufacture of AB Switches should be homogeneous and free from flaws or imperfections that might affect the mechanical dielectric quality.

They shall be thoroughly vitrified, tough and impervious to moisture. The glazing of the porcelain shall be of uniform brown in color, free from blisters, burns and other similar defects. Insulators of the same rating and type shall be interchangeable. The porcelain and metal parts shall be assembled in such a manner that any thermal expansion differential between the metal and porcelain parts through the range of temperature variation shall not loose the parts or create undue internal stresses which may affect the electrical or mechanical strength. Cap and base of the insulators shall be interchangeable with each other. The cap and base shall be properly cemented with insulators to give perfect grip. Excess cementing must be avoided.

The bidder shall in variably enclose with the offer, the type test certificate and other relevant technical guaranteed particulars of insulators offered by them. Please note that AB Switches without type test certificates will not be accepted.

Each 11kV Post Insulators should have technical particulars as detailed below:

S.N.	Particular	Value
1	Nominal system voltage KV (rms)	11
2	Highest system voltage KV (rms.)	12
3	Dry Power Frequency one minute withstand voltage (rms) in kV	35
4	Wet Power frequency one minute withstand voltage (rms) in kV	35
5	Power Frequency puncture KV (rms) voltage	1.3 times the actual dry flashover voltage
6	Impulse withstand voltage KV (Peak)	75
7	Visible discharge voltage KV (rms)	9
8	Creepage distance in mm (minimum)	320

The rated insulation level of the AB Switches shall not be lower than the values specified below:

S.N.	Standard declared Voltage	Rated voltage of the AB switch	Standard impulse withstand voltage (positive & negative polarity Isolating distance		One Minute power frequency withstand voltage KV (rms)	
			Across the Isolating distance	To earth & between poles	Across the Isolating distance	To earth & between poles
1	11KV	12kV	85kV	75kV	32kV	28 kV

10.20.4 Temperature Rise

The maximum temperature attained by any part of the equipment when in service at site under continuous full load conditions and exposed to the direct rays of Sun shall not exceed 45 degrees above ambient.

10.20.5 Main Contacts

AB Switches shall have heavy duty self-aligning type contacts made of hard drawn electrolytic copper/brass. The various parts should be accordingly finished to ensure inter changeability of similar components. The moving contacts of the switch shall be made from hard drawn electrolytic copper brass. This contact shall have dimensions as per drawing attached so as to withstand safely the highest short-circuit currents and over voltage that may be encountered during service. The surface of the contact shall be rounded smooth and silver-plated. In nut shell the male and female contact assemblies shall ensure.

a. Electro-dynamic withstands ability during short circuits without any risk of repulsion of contacts.

b. Thermal withstands ability during short circuits.

c. Constant contact pressure even when the lower parts of the insulator stacks are subjected to tensile stresses due to linear expansion of connected bus bar of flexible conductors either because of temperature variations or strong winds. Wiping action during closing and opening.

d. Fault alignment assuring closing of the switch without minute adjustments

10.20.6 Connectors

The connectors shall be made of hard drawn electrolytic copper or brass suitable for DOG/RABBIT ACSR conductor for both 11KV AB Switches. The connector should be 4 -bolt type.

10.20.7 Operating Mechanism

All AB Switches shall have separate independent manual operation. They should be provided with ON/OFF indicators and padlocking arrangements for locking in both the end positions to avoid unintentional operation. The isolating distances should also be visible for the AB Switches.

The AB Switch will be supplied with following accessories:

S.N.	Item	Size of 11 kV AB Switch
1	Operating Rod (GI dia)	Length 5.50 meter, dia 25 mm
2	Phase coupling square rod (GI)	Length 1800 mm, Size 25x25 mm
3	Hot dip galvanized Operating handle (GI)	1 No.

The AB Switches shall be capable to resist any chance of opening out when in closed position. The operating mechanism should be of robust constructions, easy to operate by single person and to be located conveniently for local operation in the switchyard. The GI pipe shall conform to ISS: 1239-68 and the vertical down rod should be provided with adequate joint in the mid-section to avoid bending or buckling. Additional leverage should be provided to maintain mechanical force with minimum efforts. All iron parts should be hot dip galvanized. All brass parts should be silver Plated and all nuts and bolts should be hot dip galvanized

10.20.8 Arcing Horns

It shall be simple and replaceable type. They should be capable of interrupting line charging current. They shall be of first make and after break type.

10.20.9 Bush

The design and construction of bush shall embody all the features required to withstand climatic conditions specified so as to ensure dependable and effective operations specified even after long periods of inaction of these Air Break Switches. They shall be made from highly polished bronze metal with adequate provision for periodic lubrication through nipples and vent.

10.20.10 Design, Materials And Workmanship

The successful tenderers shall assume full responsibility for co-ordination and adequate design. All materials used in the construction of the equipment shall be of the appropriate class, well finished and of approved design and material. All similar parts should be accurately finished and interchangeable.

Special attention shall be paid to tropical treatment to all the equipment, as it will be subjected during service to extremely severe exposure to atmospheric moisture and to long period of high ambient temperature. All current carrying parts shall be of non- ferrous metal or alloys and shall be designed to limit sharp points/edges and similar sharp faces. The firm should submit the following type test certificate along with the certified copy of the drawing. The type test should not be older than 5 years from the date of opening of tender.

1. Test to prove capability of rated peak short circuit current and the rated short time current.
The rated short time current should correspond to minimum of 10kA and the peak short circuit current should correspond to minimum of 25kA.
2. Lightning impulse voltage test with positive & negative polarity.
3. Power Frequency voltage dry test and wet test.
4. Temperature rise test.
5. Mill volt drop tests.

10.20.11 Dimension of 11 kV AB Switches in (Max.) Tolerance 5%

S.N.	Particular	11KV AB Switch
1	MS Channel	450x75x40
2	Creepage distance of Post Insulator	320mm (Min)
3	Highest of Port shell	254 mm
4	Fixed contact assembly	
	i) Base	165x36x8
	ii) Contact	70x30x6
	iii) GI cover	110X44
5	Spring	6nos
6	Moving contract assemble	
a	Base Assembly	135x25x8
b	Moving	180x25x9
c	Bush	Bronze Metal

d	Thickness of Grooves	

Government of Nepal
Ministry of Infrastructure Development
Department of Water Supply and Sewerage Management Office
Water Supply and Sewerage Management Office
Butwal, Rupandehi

Office Chief

10.20.12 Terminal Connectors

The bidder should provide AB Switches with terminal connectors, set of insulators, mechanical inter works and arcing horns sets. The base channel for the mounting of AB Switches shall also be included in the scope of AB Switches. The operating mechanisms together with down pipe operating handle etc. are also included in the scope of supply.

10.20.13 Routine Test Certificate

The Routine test certificate should invariably be submitted in duplicate of each lot offered for inspection as per IS: 9920 (part-I to IV). The offers received without Routine test certificate shall not be entertained.

10.20.14 Acceptance Test

At the time of inspection following test shall be carried out:

a. Physical verification and measurement of dimension.

b. Power frequency high voltage test.

c. Temperature rise test.

d. Mechanical endurance test / operation test.

e. Milli volt drop test.

f. Galvanising test

10.20.15 Name Plate

The name plate in the following design shall be fixed on each AB Switch.

a. Name of supplier:

b. Name of purchaser:

c. Rating:

d. Serial number of units:

The size of name plate shall be 2" x 1" for 11 KV AB Switch.

10.21 LT Power Cable (PVC)

10.21.1 Scope

This Specification covers the design, manufacture, factory test and supply of 1.1 kV grade PVC insulated multicore power cables. The cables will be used for the purpose of 400V use of Nepal Electricity Authority.

10.21.2 Rated Voltage

The rated voltage of the cables shall be 1100V.

10.21.3 Service Condition

a)	Ambient temperature	-5 to 55 deg. C
b)	Annual average ambient temperature	30 deg. C
c)	Maximum relative humidity	99%
d)	Environmental condition	Humid Tropical climate
e)	Operational altitude	Up to 1000m above msl
f)	Isokeraunic (Thunder Day) level	90 days
g)	Solar Radiation	1.6kW/m2
h)	Wind Zone	Zone 4

10.21.4 Applicable Standards

The equipment and components supplied shall be in accordance with the latest editions of the standards specified below and amendments thereof or any international equivalent standards and the NEA Specifications specified hereafter.

a)	IS 1554	Specification for PVC Insulated heavy duty Electric cables for working voltages upto & including 1100 V
b)	IS 8130	Specification for conductors for insulated electric cables and flexible cords

The Bidder may propose alternative standards, provided it is demonstrated that they give a degree of quality and performance equivalent to or better than the referenced standards. The purchaser shall adjudge whether to accept or reject any standards.

The Bidder shall furnish a copy of the alternative standard proposed along with his bid. If the alternative standard is in a language other than English, an English translation shall be submitted with the standard. In case of conflict the order of the precedence shall be (1) IEC standards, (2) ISO standards, (3) European or British Standards, (4) Indian Standards, (5) Other alternative standards.

This list is not to be considered exhaustive and reference to a particular standard or recommendation in this specification does not relieve the Contractor or the necessity of providing the goods complying with other relevant standards or recommendation.

10.21.5 Technical Parameters

10.21.5.1 Minimum Technical Requirements

S.N.	Description	Unit	Requirements
1	Rated Voltage	kV	
2	Maximum System Voltage	kV	
3	Rated Voltage between two conductors	kV	
4	Power Frequency withstand voltage	kV	
5	Number of Cores		4
6	Phase Conductor		3
7	Insulation Material		PVC
8	Conductor		EC Grade Al.
9	Minimum Number of Strand		
10	Nominal Thickness of Insulation		
11	Minimum Thickness of inner sheath		
12	Type and dimensions of armor		
13	Minimum thickness of outer sheath		
14	Conductor Temperature Rise during Normal Operation	deg. C	70
15	Conductor Temperature Rise during Short Circuit	deg. C	160
16	Direction of Lay		Right Hand
17	Standard Length of Cable Per drum	m	Min. 500

10.21.5.2 Requirements of size

The required size of PVC insulated, aluminum Conductor, armored cable shall be:
4x400 mm^2, 4x300 and 4x150mm^2

10.21.6 Basic Features

10.21.6.1 Design

The power cable shall conform in all respects to highest standards of engineering, design, workmanship, this specification and the latest revisions of relevant standards at the time of offer and the Purchaser shall have the power to reject any work or material, which, in his judgment is not in full accordance therewith.

10.21.6.2 Conductors

The conductor shall be of multi-strand round aluminum of compacted circular cross-section conforming to IEC or equivalent international standards. The conductor shall be clean and reasonably uniform in size and shape and its surface shall be free from sharp edges.

10.21.6.3 Insulation

The conductor shall be provided with PVC insulation applied by extrusion. Type of insulation shall be A for general purpose PVC.

10.21.6.4 Laying up of Cores

In twin, three & multi core cables, the cores shall be laid up together with a suitable lay, the outermost layer shall have right hand lay and the successive layer shall be laid with opposite lay.

10.21.6.5 Inner Sheath

The laid up cores shall be provided with Inner Sheath applied by extrusion. It shall be ensured that the shape of Cable is as circular as possible. Inner sheath shall be so applied that it fits closely on the laid up cores and it shall be possible to

remove it without damaging the insulation.

Government of Nepal
Ministry of Infrastructure Development
Department of Water Supply and Sewerage Management
Water Supply and Sewerage Management Office
Butwal, Rupandehi

Office Chief

10.21.6.6 Armour

The armour wires/strips shall be applied as closely as practicable. A binder tape may be provided on the armour.

10.21.6.7 Outer Sheath

The outer sheath shall be applied by extrusion over the armouring. The colour of outer sheath is black unless otherwise specified. Thickness of outer sheath should be as per IS: 1554.

10.21.7 Cable Identification and Marking

The following shall be embossed on the outer sheath of the cable throughout the length of cable at 1.0 meter spacing. The embossing should be very clear and easily visible to naked eye. The height of the printed lettering shall be not less than 20% of the overall diameter of the conductor. Sequential length shall be marked on the outer sheath of the cable throughout the length by Printing in each meter length interval.

- Applicable Standards
- Name/Identification of the manufacturer,
- Name of the Purchaser 'Nepal Electricity Authority'
- Voltage Grade of Cable
- Type of Insulation, material of conductor
- Number of Cores and nominal cross-sectional area of conductor
- Cable Code
- Year and Month of Manufacture

Each phase of the core shall be identified with the color Red, Yellow, Blue and Black on the inner sheath.

10.21.8 Packaging

All conductors shall be furnished on non-returnable steel drums capable of withstanding all normal transportation and handling. Protective external lagging of sufficient thickness shall be provided and fitted closely on the drums. Binder consisting of steel straps shall be provided over the external laggings. The drums shall be new and sufficiently sturdy in construction to withstand ocean shipping, road transport, several loading and unloading, storage in tropics, hauling and field erection of conductor without distortion or disintegration.

Each reel of the conductors furnished shall contain only one (1) length of conductor. The minimum length of each drum shall be minimum of 500m. All drums shall be legibly marked in paint with the following information:

(i) Manufacturer's Name and Trademark (if any)
(ii) Drum Number or identification number
(iii) Type of conductor
(iv) Size of conductor
(v) Voltage Grade
(vi) Length in meters
(vii) Gross Weight
(viii) Net weight of conductor
(ix) Direction of rolling

10.21.9 Inspection And Testing

10.21.9.1 Acceptance Test

The successful Bidder shall make necessary arrangements for pre-shipment inspection and tests by the nominated NEA Inspectors to carry out in his presence the necessary Sample/Acceptance tests conforming to the relevant governing standards on the completed cables offered.

10.21.9.2 Routine Test

The Routine Tests shall be carried out on the completed cables at the manufacturer's plant in accordance with the governing standards. The test reports shall be made available for the observation of the NEA Inspector at the time of inspection.

10.21.10 Bid Documentation

10.21.10.1 The following shall be furnished with the offer:

(a) Complete description, catalogue, drawings showing general construction and size of the cables including dimensional drawing of cable drum for each type of cable.
(b) Completed Schedule of Guaranteed Technical Particulars
(c) A copy of the Manufacturer's ISO 9001 Certificate conforming to design and manufacture
(d) Type Test Certificates: The Type Test Certificates shall be from an Accredited Independent Testing Authority acceptable to the Purchaser.
(e) Copy of the Governing Standards
(f) Technical Literature in English Language on installation, operation and maintenance with necessary diagrams and drawings.

Government of Nepal
Ministry of Infrastructure Development
Department of Water Supply and Sewerage Management
Water Supply and Sewerage Management Office
Nepalgunj, Banke
Office Chief

10.21.10.2 Type Test Certificates

The material offered shall be fully type tested by an independent accredited testing laboratory acceptable to the Employer. The bidder shall submit the type test reports along with the offer. The tests shall comply with relevant Standards. The Employer also reserves the right to have tests carried out by an independent agency, whenever there is a dispute regarding the quality of supply.

11 OTHER ELECTRICAL INSTALLATIONS

11.1 Water Level Indicator

11.1.1 Float less Type Level Switch In Water Tanks

The Contractor shall supply and install float less type switch probes in all water tanks as indicated below and shown on the drawings.

- High level alarm (over-flow);
- Low level alarm;
- Low level cut-out for raw water pumps;
- Earthing probe.

Each probe shall be of the correct length for the particular application and tank location. Electrodes shall be of polished stainless steel 20 mm OD. Electrode holders shall be weatherproof in all respect. The earthing probes shall be connected and wired to the building earth systems of the building.

Each set of electrodes shall be installed inside a 230 mm diameter PVC pipe acting as a wave barrier. The level switch set shall operate with a stepped down voltage at 24V maximum. Stepped down transformers shall be provided for each set of control probes and shall be installed inside centralized control cubicles inside pump room. Mechanical steel stuffing boxes shall be used.

11.1.2 Control of Duty / Standby Pumps

Operation of the duty and standby pumps shall be carried out by the following methods:

- Automatically by means of LEVEL sensor (i.e. magnetic switches);
- Manually by means of a local start/stop push buttons on pump local motor control panel and emergency stop switch.

Automatic controls shall be operated by electronic, float less type level switches.

11.1.3 Pump Indicator

Automatic controls shall be operated by electronic, float less type level switches. The following audible and visible indication shall be provided at the pump local control panels as applicable:

- Red "overflow level" indicator with buzzer for the associated water tanks;
- Amber "extra high water level" indicator for the associated water tank;
- Amber "high water level" indicator;
- Amber "low water level" indicator;
- Red "pump trip" indicator for each pump;
- Green "pump on" indicator for each pump;
- "Pump electrical supply healthy" indicator for each pump;
- Amber "remote/local" status indicator.

11.2 LT Voltage Stabilizer

Voltage stabilizer shall correct the voltage automatically as per required specification and variation limit without any distortion in the output voltage waveform.

Voltage stabilizer up to 100 kVA shall be air cooled whereas stabilizer above 100 kVA shall be oil cooled. Stabilizer shall consist of following units:

- Regulator unit
- Buck boost unit
- Automatic control unit
- Enclosure

Automatic regulator unit shall be oil cooled above 100 kVA, naturally cooled on load, stepless rolling contact type. Fittings

Government of Nepal
Ministry of Infrastructure Development
Department of Water Supply and Sewerage Management Office
Water Supply and Sewerage Management Office
Butwal, Rupandehi
Office Chief

and accessories for regulator shall be as follows:

- Radiator cooling system when oil cooled
- Lifting lugs
- Earthing terminals
- Diagram and rating plate.
- Drain valve and oil filling hole when oil
- Silica gel breather when oil cooled
- Thermometer pockets

11.2.1 Core

The magnetic circuit shall be built of transformer grade cold rolled grain oriented low loss steel stampings having high permeability and conforming to adopted standards. Stamping shall be insulated from each other with material having high inter-lamination insulation resistance and rust inhibiting property and also capable of withstanding pressure, mechanical vibration and action of heat and oil, thus reducing the possibility of sludge formation to a minimum.

The framework clamping arrangement and general structure of the cores shall be of robust construction and shall be capable of with sustained any shock to which they may be subject during transport, installation and service. The assembled core shall be securely clamped on the limbs and the yoke, to build up a rigid structure. The clamping pressure shall be uniform the whole of the core and so adjusted as to minimize noise and vibration in the core when the transformer is in service. The framework and the core bolts shall be efficiently insulated from the core so as to reduce the circulating currents to a minimum.

The core clamping frame shall be provided with lifting eyes for the purpose of tanking and untanking the core with winding mounted thereon and shall have ample strength to take the full weight of the core and winding assembly.

11.2.2 Winding

The coils used for winding shall be circular in shape made of paper insulated continuous and smooth tinned or enameled electrolytic copper conductors of high conductivity.

Liberal ducts shall be provided to prevent any hot spot temperature in the winging that may adversely affect the life of the equipment. Adequate supports wedges and spacers of hard insulating material shall be so fitted that they will neither move nor permit relative movement of any part of winding during transit of normal service or under terminal short- circuit, nor damage the winding insulation in any way. All leads and connections shall be robust, adequately insulated, protected and clamped. The winding assembly shall be dried in vacuum with tested insulating oil of approved standard. The windings shall be subjected to a through shrinking and seasoning process so that no further shrinking of windings occur during service at site. However, adjustable devices shall be provided for taking up any possible shrinkage of coils in service. The assembly shall be held in position under adequate axial compression to withstand the axial thrust likely to occur under terminal short-circuit.

11.2.3 Auto Control Unit

Auto control unit shall be mounted along with the regulator tank and shall consists of

- PCB relay/ electronic relay
- Step syn. Geared motor
- Auto/ manual switch

Set of push buttons

- Lower raise switch/ push buttons
- Indicating lights
- Input & output voltmeters
- Ammeter with selector switch

11.2.4 Technical Parameters

	KVA Rating	As per schedule of quantities
	Rated Voltage	415 VAC
	Input Volts	330 V to 460 V AC
	Output Volts	415 V ± 1%
	Rated Frequency	50 Hz.
	No. of phases for bypass system	3 Phase 4 wires system
	Load	Unbalanced
	Type of cooling	Air cooled upto 100 kVA and ONAN above 100KVA
	Maximum temperature rise	
	of oil by thermometer	44 Deg C
	of winding by resistance	55 Deg C
	of hot spot temperature indicator	65 Deg C
	Limit of hot spot temperature for which	110 Deg C

	the transformer is designed to be	
	Service	Indoor/ Outdoor
	Automatic control gear	Consisting of one electronic relay, reversing geared motor under limit switches in order to avoid over - running highest and lowest positions, chain drive, control devices and all electrical connections. Alternatively, variac consisting of carbon brushes can be provided for Automatic regulation.
	Efficiency	Better than 94%
	Distortion at output	Not exceed 5%
	Rate of correction	Not more than 8 volts per second
	Schedule of Equipment	415 V Automatic voltage stabilizer as per technical requirements shall comprise of:
		• Rolling contact type on load voltage regulator/ variac carbon brush type. • Buck-Boost transformer. • Automatic control gear.
	Tanks and Fittings	The equipment shall be housed in a sheet steel tank fitted with radiators and mounted on bidirectional/ Unidirectional rollers. The following shall be with the equipment
		• Lifting lugs • Earthing terminals. • Rating plate. • Drain valves. • Oil filling hole. • Thermometer pocket. • Oil Level Gauge. • Silica gel breather • Filter Valve.

Note: 0-500 digital voltmeter with selector switch shall be provided for incoming and outgoing side of stabilizer.

Government of Nepal Ministry of Water Supply and Sewerage Development Department of Water Supply and Sewerage Management Office Butwal, Rupandehi

Office Chief

12 ALUMINIUM DOORS, WINDOWS AND VENTILATORS

12.1 Material and sections

The aluminum work shall be carried out as per detailed specifications and conditions for the work.

All aluminum work shall be free from defect in impairing, strength durability appearance and shall be of the best commercial quality for purposes specified made with structural properties to withstand safely strains / stresses to which they shall be normally subjected. All sections shall be of approved extruded tubular anodized aluminum sections from the approved manufacturers, as per architectural drawings and as per relevant IS Specifications or equivalent. Any equivalent extrusion will be got approved from the Engineer.

The contractor shall provide all items, articles, materials, operations, mentioned or scheduled, on the drawings, including all labour, materials fixing devices, equipment and incidentals necessary as required for their completion.

The contractor shall submit shop drawings and samples of each type of doors, windows, railing and other items of aluminum work to the Project Manager for approval. The shop drawings shall show full size sections of doors and windows etc. thickness of aluminium sections, details of construction hardware as well as connections of doors, windows and other aluminium work to adjacent work. Shop drawings shall be based on actual dimensions available on site. The variation in openings and shop drawings shall not be more than + 1.5 mm.

Aluminium doors and shutters shall be manufactured by an approved manufacturer and shall be of sections, sizes, combination and details shown on the architectural drawings. The frame member shall be of one piece and glazing bars shall be threaded or interlocked as approved by the Engineer.

Glazing for doors and windows shall be of specified thickness and approved quality and shall conform to specification of glazing. Fixing of glazing shall be done with aluminum 'Snap-On' beading as per detailed drawings and instructions. Necessary rubber gaskets of approved make shall be provided.

Upon delivery of doors and windows to site, they shall be handled with care, stored on edge on level bearers and supported evenly.

The manufacturer, immediately prior to the commencement of glazing, shall adjust and set all doors and accept responsibility for the satisfactory working of the opening frames. All doors shall open or slide as indicated in drawings and schedules.

The contractor shall be responsible for the doors & window shutters being set straight, plumb and level and for their satisfactory operation after the fixing its complete.

Fittings shall retain the casements rigidly in both open & closed positions. All fittings shall be got approved from the Project Manager. The fittings and aluminium work shall be complete and shall be wrapped and protected until the complete aluminum work is washed with mild solution of non-alkali soap and water and left in complete finished conditions.

12.2 Fabrication

All fabrications shall be got done with workmen who are skilled in the trade and fully equipped to carry out phases of fabrication in accordance with the best accepted practice and as shown on the drawing. All work shall be shop fabricated and finished and then brought on site for installations. The details of the equipment possessed by the contractor shall be provided, which should conclusively prove that all facilities required to execute the work as per specifications, are available.

All aluminium works shall be deemed to include in various items, complete work including fittings, fixtures, stays, locks, handles, special hinges, floor springs, neoprene/rubber linings, gaskets, bushes, rollers, sealant etc. as directed and approved by the Engineer.

The rates quoted for aluminium works shall be inclusive of all fixtures/fittings also anodized as per main member like handles, stays, sliding gears, tower bolts, cleats, hinges etc., and their weight shall not be considered in the finished product. The payment shall be given only for the members used measured centre to centre of the sections.

All windows, glazing etc shall be made completely water proof to the satisfaction of the Engineer and necessary Silicon / Polysuphide sealants etc. shall be provided. No payment shall be made for providing necessary Silicon / Polysuphide sealant etc. to items under this sub-head.

In the items of aluminum glazing in doors and windows etc. work shall include the provision of mullions, coupling bars as required to join various units of glazing in windows and doors etc. to form larger glazing in doors or door-cum-windows as required and as per drawings.

Taking into consideration varying profiles of aluminum sections being extruded by approved manufacturers and their availability in time as required the contractor shall prepare detailed shop drawings using suitable sections based on architectural design/drawings and adequate to meet the performance and other specifications parameters laid down for the work.

The section profile weight and suitability to meet the requirement/specifications as proposed by the manufacturer and detailed shop drawings shall be subject to approval of the Engineer who should be satisfied that if fully meets the design. In case it is proposed to provide substitute for any aluminium sections, which is specified for any aluminium glazing, this would be subjected to approval of the Engineer who is to be satisfied regarding the suitability of the alternative section and it having no financial variation.

Aluminium sections used for doors and openable windows including sliding windows, fixed glazing, curtain walls, glazing

frame work, extruded wall paneling of certain hand rails etc. shall be suitable for use to meet architectural designs of relevant works and shall be subject to approval of Project Manager who would require to be satisfied about their being appropriate on technical, functional and aesthetic considerations.

All joints shall be accurately fabricated and be hairline in appearance. The finished surface shall be free from visible defects.

All aluminium shall be anodized/powder coated as specified. Anodizing powder coating shall be of approved colour and conform to IS 1868-1968 and shall be of AC 15 grade with minimum thickness of 15 microns, when measured as per IS: 6012- 1970, and density shall be at least 32 least 32 mg/sq cm. All sections are to be matt anodized/powder coated in colour as per sample approved by the Architects.

The anodized coating shall be properly sealed by steam or boiling in de-ionised water as per IS 1868-1968 and of IS 6057. Sealing quality shall be tested in accordance with DIN 50949 or similar standards.

Colour anodizing would be done only by electro colour process.

Colour fastners shall be as per 1868-1968 grading-B.

No visual variation in shade shall be permitted. The fabricator shall clearly indicate the shade variation tolerance as measured by standard equipment.

Each glazing shall be tailor made as per opening at site. No cutting and making good of concrete surface shall be permitted.

Doors, windows or fixed glazing frames shall be fixed to concrete or brick work with approved metal fasteners. Method of fixing shall be approved by the Project Manager before mass fabrication.

Samples of typical glazing shall be made and got approved from the Project Manager before fabrication.

All hardware used shall conform to the relevant IS specifications. Design, quality, type number and fixing of the hardware shall be got approved from the Engineer.

A thick layer of the clear transparent lacquer based on Methacrylates or cellulose Butyrate shall be applied on the anodized glazing before they are brought on the site. The lacquer shall be removed on completion of erection.

All screws shall be stainless steel screws threads of machine screws used shall conform to IS: 4218 or otherwise approved by the Project Manager. Gaskets for retaining glass shall be of heavy extruded neoprene.

The corners of the frame being fabricated to a true right angle. Both the fixed and opening frames shall be fabricated out of sections which have been cut to length mitered and mechanically jointed. All members shall be accurately machine milled and fitted to form headline joints. The joining accessories such as cleats, brackets, etc shall be such material as not to cause any bimetallic corrosive action.

All the frame members shall be in plumb and level and jointed in such a way that maximum expansion and contraction will not cause distortion or leakage. The contractor shall be responsible for their satisfactory performance/operation after fixing is complete.

All aluminium work shall be washed with a suitable thinner and left in a finished condition in approved uniform appearance and free from all marks and blemishes. The glass panes shall be thoroughly washed and cleaned before the work is handed over.

The requirements provisions for all anodized aluminium work shall conform to requirements specifications and parameters given in this tender, drawings, instructions and shall at least provide for or conform to IS codes relating to materials workmanship, fabrication, finishing, erection, installation etc. In this connection relevant IS codes including Nos. 1868-1973, 6012-1970, 1285-1975,7400-1974 as deemed applicable by the Project Manager shall be considered.

Suitable sections with lighter/heavier weights as may be required and approved by architect shall be provided by the contractor. No variation in quoted rates shall be made for change in section or weights given as a guide.

12.3 Glass

12.3.1 Clear Glass

The glass shall be float glass of Modi Float or equivalent. Glass used in glazing, openable and fixed doors, windows etc shall provide clear, completely undistorted vision and reflection. It shall be free from any bubbles, waves or blemishes. Glass used shall be of required size as per drawings. No extra payment shall be made for use of glasses of any size having an area up to 32 sq.ft (in one piece) for 5mm thick glass.

12.3.2 Tinted Glass

Tinted glass shall have same quality and specifications as indicated above for clear glass. It shall however be transparent glass to Bronze/Blue/Green/Smoke gray shade as required and would be expected to absorb to absorb a greater proportion of sun's radiant heat and reduce transmission than clear glass.

12.4 Drawings/ Documents

Prior to fabrication, Contractor shall submit 1 copies of shop drawing indicating details of all members, sections and hardware for Engineer's approval. All certificates against tests for anodising and other physical properties of material shall be produced to the Engineer for acceptance.

Government of Nepal
Ministry of Infrastructure Development
Department of Water Supply and Sewerage Management Office
Water Supply and Sewerage Management Office
Butwal, Rupandehi
Office Chief

12.5 Notes

1. All the fittings shall be anodised aluminium (finish compatible with original frame) type unless otherwise specified.
2. Single leaf door shutters and ventilator shutters of more than 0.80 m width shall be provided with one extra hinge.
3. Where height of window shutter and door leaf exceeds 1.2 m and 2.15 m respectively one extra hinge shall be provided for every additional height of 0.5 m or part thereof and length of top bolt shall be increased by the height of the shutter/leaf above 2.15 m from floor level.
4. In double leaf shutters of doors, two tower bolts shall be fixed to the first shutter at top and bottom and one to the closing shutter at the top.
5. All hardware shall conform to the applicable Indian Standards.

12.6 Measurement for Payment

Generally, the items shall be measured in-situ. The method of measurement shall be based on the following:

No payment shall be released till the thickness of the anodic coating is found to be minimum 15 microns and sealing quality appropriate everywhere. The testing shall be done by Eddy Current method as per IS: 6012-1970, for thickness and relevant DIN for sealing. Likewise, colour variation measurements shall also be carried out. If any material is found sub-standard this shall be totally rejected. Requisite tests shall be done at the site. 100% checking, as instructed by the Engineer may be resorted to.

Unless stated otherwise in the BOQ, payment for windows and doors shall be made by frame area for each type with same specific section. If items scheduled call for measurement by area, architraves linings, sills etc. shall not be measured separately but shall be considered as being included in the area of the opening closed by the window, door, shuttering or any other specified closure.

Unit area openings shall be considered only if standard weights of specified aluminium section shall be within the permissible limit of variation of the section. The permissible limit of variation for aluminum works shall be + 5% over the standard weight.

All costs for hardware and fittings shall be included in the unit rate of the relevant bill items.

13 FRENCH SPIRIT POLISHING

Pure shellac conforming to IS 16 varying from pale orange to lemon yellow colour, free from resin or dirt shall be dissolved in methylated spirit at the rate of 140 gm of shellac to 1 litre of spirit. Suitable pigment shall be added to get the required shade. Readymade polish conforming to IS 348 can also be used.

13.1 Polishing New Surface

13.1.1 Preparation of Surface

The surface shall be cleaned. All unevenness shall be rubbed down smooth with sand paper and well dusted. Knots if visible shall be covered with a preparation of red lead and glue size laid on while hot. Holes and indentations on the surface shall be stopped with glazier's putty. The surface shall then be given a coat of wood filler made by mixing whiting (ground chalk) in methylated spirit at the rate of 1.5 Kg of whiting per litre of spirit. The surface shall again be rubbed down perfectly smooth with glass paper and wiped clean.

13.1.2 Application

The number of coats of polish to be applied shall be as described in the item. A pad of woolen cloth covered by a fine cloth shall be used to apply the polish. The pad shall be moistened with the polish and rubbed hard on the wood, in a series of overlapping circles applying the mixture sparingly but uniformly over the entire area to give an even level surface. A trace of linseed oil on the face of the pad facilitates this operation. The surface shall be allowed to dry and the remaining coats applied in the same way. To finish off, the pad shall be covered with a fresh piece of clean fine cotton cloth slightly damped with methylated spirit and rubbed lightly and quickly with circular motions. The finished surface shall have a uniform texture and high gloss.

13.1.3 Measurements

The length and breadth shall be measured correct to a cm. The area shall be calculated in sqm (correct to two places of decimal), except otherwise stated.

Small articles not exceeding 0.1 sqm of painted surfaces where not in conjunction with similar painted work shall be enumerated.

Area of painting on hand rail shall be calculated by multiplying single running meter to gross height of hand rail (no deduction shall be made to any kind of post.

Government of Nepal
Ministry of Infrastructure Development
Department of Water Supply and Sewerage Management
Water Supply and Sewerage Management Office
Butwal, Rupandehi

Office Chief

14 MISCELLANEOUS

Unless specifically otherwise mentioned in case of repair and maintenance work, all the applicable codes & standards published by the Indian standard Institution & all other standard which may be published by them before the date of receipt of Bids, shall govern in all respects of dosing workmanship quality & propitious of materials & methods of testing, method of measurements etc. Wherever any reference to any Indian Standard specifications occurs in the documents relating to this contract, the same shall be inclusive of all amendments issued to or revisions thereof, if any, up to the date of receipt of Bids.

In case there is no Indian Code of Standard specification for the particular work (for repair and Maintenance), such work shall be carried out in accordance with the instructions in all respects, & requirements of the Engineer. Wherever any reference to any Indian standard specification occurs in the documents relating to this contract, the same shall be inclusive of all amendment issued there to or revisions thereof, if any, up to the date of receipt of Bids.

14.1 Surface Discharge Plate

Unless otherwise mentioned in Schedule of Requirements, surface discharge plates are to be made of at least 16 – 25 mm thick M.S. plate having sufficient strength to support entire weight of the pump set and the hydraulic pressure on it. The surface plate consists of a pipe bend of size sufficient to discharge the rated flow of water. The discharge bend has welded or casted flanges in both ends. The size of the surface discharge depends on the outer diameter of the tube-well and the shape may be either rounded or rectangular.

14.2 Turfing

Turfs shall be interpreted as grass that is seasonally dormant during cold or dry seasons and is capable of renewing growth after the dormant period. The turfs shall be brought by the Contractor from areas where the top soil is reasonably fertile and contain a high percentage of loamy topsoil. Turfs shall be cut or stripped from living, thickly matted turf relatively free from weeds or other undesirable foreign plants, large stones, roots or other materials which might be detrimental to the development of the turf or to future maintenance. Turf including the soil containing the roots shall be planted in a neat and systematic way.

The top soil on which Turfing is to be done shall be free of admixture of sub-soil, stone, gravel, clay lumps, plants or their roots, sticks or other extraneous material exceeding 50 mm. diameter. It shall be clay loam. The top soil shall be approved by the Engineer before being placed.

The strips of turf shall be in uniform widths not less than 230mm and length not more than 460 mm. Such lengths should be readily lifted without breaking, tearing or loss of soil. The turfs shall be transplanted within 24 hours from the time it is stripped unless storing is necessary. If stored, turfs shall be stacked, kept moist and protected from exposure to sun.

Turfs shall be cut and moved only when the soil mixture conditions are such that favorable results can be expected. Turfing shall be performed only during the seasons when satisfactory results can be expected. Turfing may be transplanted during drought free periods with the approval of the Engineer provided the turf bed is watered to moisten the soil to a depth of at least 100 mm immediately prior to laying the turf.

The turf shall be carefully placed by hand, edge to edge with staggered joints, in rows at right angle to the slopes, commencing at the base of the area to be turfed and working upward. The turf shall immediately be pressed firmly into contact with bed by tamping to provide a true and even surface. Screened soil of good quality shall be used to fill all cracks between turfs. The quality of fill soil shall not cause smothering of the grass.

The Contractor shall provide general care for the turfed area, protect against traffic and shall continue care until final inspection and acceptance of the work. If the surface become gullied or otherwise damaged during the period the affected area shall be repaved to established grade and condition as directed.

It shall be measured in square meter on the ground surface including 150 mm. thick materials and labour.

14.3 Sand Filling

Sand filling in floor or other place as mentioned or directed by engineer shall be in specified thickness as per drawing or BOQ. The sand layer shall be 75mm layers after sprinkling with water and ramming to full consolidation. Sand filling shall be done with sand confirming Clause 2.3.3.4 in layers not exceeding 75mm. Each layer shall be well watered and rammed to full consolidation with iron rammers. Other procedures shall be for earth filling described in Clause 2.2.

Rates for sand filling shall cover the cost of the provision of suitable material for any lead, placing in layers, watering and compacting as specified will measured as the volume between ground levels before and after the filling and the rate will include forming embankments, terraces, etc.

14.4 Brick bat filling

The brickbats shall be from brick of first class well burnt or slightly over burnt bricks. The bricks bats shall be laid in flat and sand shall be spread over the bricks bats and compacted to the required depth after sprinkling water. Unless and otherwise mentioned in drawing, each layer of the brick bat shall be so laid that the final compacted depth after sand blinding and watering shall not exceed 150mm. The compaction shall be carried out either manually or mechanically to

the satisfaction of the Engineer. The sand and water used in brick bat filling works shall confirm Clause 2.3.4 and 2.3.3.3.

Rate for Brick bat filling shall cover the cost of the provision of suitable material, placing in layers, watering and compacting as specified will measured as the volume between ground levels before and after the filling and the rate will include forming embankments, terraces, etc.

14.5 Transportation of Surplus Materials

Excavated materials surplus after backfilling shall be disposed off immediately after the completion of backfilling works at a location as directed by the engineer as per Clause 2.2.8.

14.6 Geotextile

Geotextile shall be made of polyethylene or polyster or similar fibres, either woven or nonwoven. Unless otherwise shown on the drawing, the geotextile shall:

14.6.1 sustain a load of not less than 10kN/m at break and have minimum failure strain of 10 percent when determined in accordance with BS:6906 or shall have a grab tensile strength more than 0.4 kN/m and grab elongation corresponding to this limit in accordance with ASTM D4632.

14.6.2 have apparent opening size as shown on the Drawing. If no size is shown on the Drawing, then the apparent size shall be 0.1 mm.

14.6.3 allow water to flow through it at right angles to its principal plane, in either direction at a rate of not less than 50 litres/sq.m./sec. under a constant head of 100 mm, determined in accordance with BS:6906 (part 3) or ATSM D4491, unless otherwise shown on the Drawing. The flow rate determined in the test shall be corrected to that applicable to a temperature of 150C using data on variation in viscosity of water with temperature.

14.6.4 have a minimum puncture resistance of 200N when determined in accordance with ASTM D 4833.

14.6.5 have a minimum tear resistance of 350 N determined in accordance with ASTM D 4533.

14.7 Gas Vents

When specified, gas vent flaps or vent pipes shall be installed in accordance with the drawings or as instructed by the Engineer to provide adequate venting for the liner system. The venting pipe should be fitted with required fittings and cowling.

14.8 Electro-fusion Welding Machine

Type - Automatic with Bar Code Reader, Automatic Operations & Data Logging:

S. No.	Parameters Description	Specification Range
	Input	
1	Operating Temperature	-10 to + 50 deg C (Ref. Manual)
2	Mains Voltage	230V (-15% to + 10%)
3	Supply Current	15 Amp AC (Peak -26 Amp)
4	Frequency	50±10 Hzs.
5	Supply Power	Min. - 5KW
	Output	
1	Controlled Welding Voltage	8 - 48 V AC
2	Welding Power	8 to 3120 VA
3	Welding Current	1 to 65 Amp AC (100 Amp short term)
	General Features	
1	Manual Operations	Should be Possible
2	Barcode Reader	Pen or Scanner
3	Automatic Temp Compensation	Must be achieved in Automatic mode
4	Environmental Protection Type	IP65
5	Electrical Protection	Class 1 Earthed
6	Overload protection	Thermal 16 A (for 230 V versions)
7	Length of connector cable - Output Cable	3 Meters

Government of Nepal
Ministry of Infrastructure Development
Department of Water Supply and Sewerage Management Office
Water Supply and Sewerage Management Office
Butwal, Rupandehi
Office Chief

8	Length of mains cable- Input Cable	4 Meters
9	Connectors Diameter	4mm F
10	Adapters Diameter	4.7mm F / 4mm M
11	Ambient Thermometer Precision	± 1° C
12	Standard	ISO 12176 - 2:2008
13	Data Logging - In & Out	USB Port - With 1GB Pen drive to download & Data memory - 2000 Welds
14	Cooling Time display	Activated
15	Maximum Welding time	3600 Seconds
16	Dimension (W/D/H/)	Not to exceed 30 Cm x 30 Cm x 40 Cm
17	Weight with cables	Not to exceed 20 Kg
18	Display	4 Line with Backlight & High contrast. It shall be possible to view on display, any kind of information regarding malfunctions that could occur before or during welding
19	Carrying Case	Metallic Box (Transport Case). Strong Aluminium case with SS fittings
20	Warranty	12 Months from the date of purchase
21	Service Centre & Calibration Services	Shall be available locally
	TPI certification	Should have any third party independent agency certification

14.9 Manual scraper

1) Blade in hardened steel, with sharp scraping edge.
2) Blade must have interchangeable 4 scraping edges.
3) The blade must have been fixed on a plastic handle inclined at an angle of 450 with the plane of the blade.
4) The minimum width of the blade should be 50 mm.
5) Weight should not exceed 0.50 kg.

14.10 Pillar Type Saddle Clamp (Top Loading) – For Pipe Size 63 to 315 MM.

1) Manufactured from Zinc plated steel. Strong welded construction & Zinc plated steel to avoid bending, damage & rusting.
2) Suitable to work with tapping saddles (Tapping Tees), branch saddles.
3) Designed to hold saddles onto pipe with top load of 1000 to 1500 Newtons, before and during the Electro-fusion process.
4) Designed to hold saddles on 63 to 315mm diameter PE pipe.
5) The Pillar Clamps shall be supplied in two size range: 63-125mm and 63-250 mm.
6) Simple operation, Load cell with Calibrated long life spring shall be used. Encapsulated load cell to avoid malfunctioning of Spring due to mud, grit & muck. Lubrication inside the load cell to ensure smooth clamping & less wear / tear of rotating & rubbing surfaces during heavy load conditions of 1500 Newton.
7) Load spring and indicator to show correct load has been applied.
8) The loading arm must slide easily up and down the pillar, allowing quick assembly of the joint.
9) The V block / foot of the clamp to allow the tool to swivel and negotiate the pipe orientation in pit / allowing access in a confined space.
10) The Size must be less than 60 cm x 20 cm x 10 cm
11) Weight must be less than 10kg.
12) Tool must be complied with the requirements of the National Grid Transco specification GIS/PL2-5: 2006. Specification for Polyethylene pipes and fittings for natural gas and suitable manufactured gas. Part 5: Electrofusion ancillary tooling

14.11 Strap Type Saddle Clamp (Top Loading) – For Pipe Size 63 to 630 MM.

1) Manufactured from Zinc plated steel. Strong welded construction & Zinc plated steel to avoid bending, damage & rusting.
2) Suitable to work with tapping saddles (Tapping Tees), branch saddles.

3) Designed to hold saddles onto pipe with flexi-strap with top load of 1000 to 1500 Newtons, before and during the Electro-fusion process.

4) Designed to hold saddles on 63 to 630mm diameter PE pipe with the flexi-strap locked with quick-fix / quick-release buckles.

5) Simple operation, Load cell with Calibrated long life spring shall be used. Encapsulated load cell to avoid malfunctioning of Spring due to mud, grit & muck. Lubrication inside the load cell to ensure smooth clamping & less wear / tear of rotating & rubbing surfaces during heavy load conditions of 1500 Newton.

6) Load spring and indicator to show correct load has been applied.

7) The stirrup at the top of the clamp to allow the tool to swivel and negotiate the pipe orientation in pit / allowing access in a confined space.

8) The Size must be less than 20 cm x 20 cm x 20 cm

9) Weight must be less than 3kg.

10) Tool must be comply with the requirements of the National Grid Transco specification GIS/PL2-5: 2006. Specification for Polyethylene pipes and fittings for natural gas and suitable manufactured gas. Part 5: Electrofusion ancillary tooling

14.12 Pipe Restraining, Alignment and Re-rounding Clamps

1) Shall be suitable for pipes of diameter d 63,60 ,75, 90,110,125,140 160 & 180 in one clamp, with interchangeable plastic insert sleeves for each size.

2) Shall be suitable for Straight, Elbow and Angular joints.

3) In one clamp pipe restraining, alignment and re-rounding features shall be available.

4) Design must be light weight (in aluminium material)

5) Design must be flexible for ease clamping of fittings.

14.13 Pipe Cutter- Wedge type

1) Suitable for Cutting PE pipes of diameter d20 to 63 mm.

2) Manufactured from steel with Zinc plating or powder-coating. Strong construction to avoid bending, damage & rusting.

3) Sharp cutting edges in hardened steel.

4) Amplified leverage for reducing cutting efforts.

5) Positive locking for accidental release of pipe during cutting.

14.14 Apparatus and Equipment for Water Quality Laboratory

14.14.1 pH Meter

Analytical Method	Electrometric Method; APHA 4500-H+ B
Type	Bench top
Range	-2 to 16 PH : -200 to 1200C
Resolution	0.01 ppm, 0.10C
Accuracy	±0.1PH ±0.01 PH , ±0.2 mv, ,± 1mv , ±0.20C
Calibration	Automatic up to 5 point calibration with 7 standard buffer solutions
Temperature Compensation	Manual or Automatic from -20.0 to 120.00C
Electrode	pH electrode: glass, interchangeable, min. 1 m cable (included); Temperature electrode: min. 1 m cable (included)
Operating environment	minimum 0 – 50 °C; RH 95%
Other features	USB interface Plastic moulded rust proof, water-proof body Data logging up to 200 records Plastic electrode holder Ready indicator GLP features

Government of Nepal
Ministry of Infrastructure Development
Department of Water Supply and Sewerage Management Office
Butwal, Rupandehi

Office Chief

14.14.2 Lab Nephelometer (Turbid meter)

Principle of operation	Nephelometric
Analytical method	Compliance with ISO 7027 or USEPA Method 180.1 or APHA 2130 B
Range	0.0 to 9.99, 10.0 to 99.9, 100 to 4000 NTU
Range selection	Automatic
Resolution	0.01 on lowest range
Light source / Life	Tungsten filament lamp / greater than 1 00 000 readings
Accuracy	±2 % of reading plus 0.02 NTU
Calibration	Automatic 3-points calibration with memorized buffers; calibration solutions included
Repeatability	±1% of reading
Turbidity standards	< 0.1, 15, 100 and 2000 NTU
Operating environment	0 – 50 °C; RH 95%
Other features	USB PC interface minimum 10ml or 20 ml sample volume minimum 4 empty sample vials Log memory 200 records

14.14.3 Electrical Conductivity Meter

Analytical method	Laboratory Method; APHA 2510 B.
Range	to 29.99 µS /cm ,30.0 to 299.9 µS /cm, 300 to 2999 µS /cm 30 to 200 ms/cm up to 500.0 mS/cm
Resolution	0.01 µS/cm; 0.01 mS/cm
Accuracy	± 1% of reading ± (0.5 µS or 1 digit, which greater)
Electrode	conductivity probe with temperature sensor and min. 1 m cable (included)
Temperature	-5.0 ... +105.0 °C
Salinity	to 400.0% NaCl
Calibration	1 Point offset calibration (0.00 µS/cm in air):1 point slope calibration In EC standard 84 µS/cm
Operating environment	minimum 0 – 50 °C; RH 95%
Temperature Compensation	Automatic temperature compensation
Other features	Simultaneous display of temperature / 200 data memory Rechargeable battery that can last at least 6 hours

14.14.4 Handheld Pocket Residual Chlorine Analyser

Analytical Method	DPD Colorimetric, Method APHA 4500-Cl G
Range	0.01 – 5 ppm
Optics	Dual LED light source optical system with narrow band wavelength filters and photo detectors
Accuracy	Dual wavelength, 530 nm
Wavelength Tolerance	±2 nm
Data point memory	min. 1000
Filter bandwidth	10 nm
Operating environment	minimum 0 – 50 °C; RH 95%
Reagent	Supplied with reagent pack for free and total chlorine – 200 tests
Operating Temperature	0°C – 50°C
Power supply	2×1.5V AA Batteries. Auto switch off setting

Office Chief

Other features	Stability indicator feature that prompts when to take the reading " Hold" feature that freezes the display for easy and accurate recording 25 nm diameter test tube

14.14.5 Thermometer

The lab thermometer shall be equipped with non-mercury red alcohol and white back permanently fused markings. Length of the thermometer shall be minimum 300mm. The range of the capacity is from -10^{0}C to 150^{0}C with a division of 1^{0}C.

14.15 Resilient Bearing Strip

When specified, gas vent flaps or vent pipes shall be installed in accordance with the drawings or as instructed by the Engineer to provide adequate venting for the liner system. The venting pipe should be fitted with required fittings and cowling.

Resilient Bearing Strip is a bearing pad shall be manufactured by all new (unused) materials and composed of multiple layers of prestressed 50/50 cotton-polyester blend duck, 8.1 ounce per net square yard, duck warp count 50 ± 1 threads per inch and filling count 40 ± 2 threads per inch, impregnated and bound with a high quality, oil-impervious nitrile rubber compound, containing rot and mildew inhibitors and anti-oxidants, compounded into resilient pads of uniform thickness.

Pads can withstand compressive loads perpendicular to the plane of laminations of not less than 12,000 psi before breakdown.

Pads meet AASHTO standard specification for fabric-reinforced bearing pads. Low coefficient of friction via PTFE surface

PTFE pad shall be minimum nominal thicknesses of 6.3 mm.

14.16 Stainless Steel Strip

Stainless Steel Strip used in saddle posts, anchor blocks, thrust blocks and other structure shall be as per IS 6911-1992 and dimension shall be as per the drawing. The weight of steel sheet and strips shall be taken from relevant Indian Standards based on 7.85 kg/m2 for every millimeter sheet thickness. For rolled sections, steel rods and steel strips, weight given in relevant Indian Standards shall be used.

14.17 Technical Specification of Pressure Filter

The general specification of the equipment proposed for the water treatment process is given below.

14.7.1 Chemica Doser

The chemical doser should be electro-metering type and shall be capable of applying the specified chemical dose. The dose of the chemical shall be fixed by trial at first according to the inflow water quality and discharge. A proper pumping system with all necessary accessories for chemical dosing shall be provided. The pump head should be suitable for the chemicals to be dosed. The capacity of the chemical dosing should be sufficient for 24 hours of normal operation. The contractor shall specify the type of model, capacity of dosing and pressure of dosing. The dosing tank shall be FRP. The electronic metering pump shall be fitted on the top of FRP chemical tank. The dosing pump system shall be equipped with mechanical mixer driven by electric motor. The chemical tank shall be equipped with one low level control which will automatically cut off the metering pump in case the solution level goes below the warning level.

14.7.2 Aeration Tower

The aeration tower shall be vertical type and shall be pressure operated type packed with pall rings. The tower shall furnish a filtration rate of 45 cubic meter per hour per square meter of surface area or more. The vessel shall be fabricated out of mild steel (MS) plate as per Indian Standards (IS)-226 or equivalent. The filter shall have standard dished ends at both the ends. Each filter tank shall be tested under hydrostatic pressure of 50% in excess of the working pressure of 3.5 kg/cm^2. The filter shall be equipped with the necessary flanges and connections for the exterior and interior piping. The manhole shall have an exterior bolt on cover with exterior gaskets easily removable.

All the pipes including inlet and outlet pipe shall be of diameter as specified. All the tank connections shall be of heavy steel and they shall be drilled and bolted in position. Filter exterior pipe shall not be welded but joined with the help of flanges. Filter exterior shall be provided with all necessary pipes, valves and fittings to make a complete unit. All the interconnecting pipe fittings and valves shall be best quality and confirm with ISI or equivalent. The tank support leg shall be of specified diameter heavy pipe welded to the bottom reinforced

pad in tank bottom.

Government of Nepal
Ministry of Infrastructure Development
Department of Water Supply and Sewerage Management Office
Water Supply and Sewerage Management Office
Baneshwor, Kathmandu

Office Chief

Aeration tower will be packed with pall rings for a depth specified. The pall ring shall be of metallic type having dimensions of 16 mm x 16 mm with thickness of 0.3 to 0.4 mm. The specific surface area pall ring shall be not less than 316 m^2/m^3 and its free space shall be 93%. The specific weight of the pall ring shall be 400 to 535 kg/m^3.

The air blower/compressor shall able to supply air with air/water ratio of 10. It shall be able to supply air in sufficient quantity as specified at a pressure sufficient to move the air in the upward direction. The air blower/compressor shall conform with ISI or equivalent.

14.7.3 Pressure Filter

The pressure filter shall be vertical type and shall be pressure operated type, sand and gravel layers packed in the steel vertical tank. Each filter shall furnish a filtration rate of 9 cubic meter per hour per square meter of filter area or more. The vessel shall be fabricated out of mild steel (MS) plate as per Indian Standards (IS)-226. The filter shall have standard dished ends at both the ends. Each filter tank shall be tested under hydrostatic pressure of 50% in excess of the working pressure of 3.5 kg/cm^2. The filter shall be equipped with the necessary flanges and connections for the exterior and interior piping. The manhole shall have an exterior bolt on cover with exterior gaskets easily removable.

All the pipes including inlet and outlet pipe shall be of diameter as specified. All the tank connections shall be of heavy steel and they shall be drilled and bolted in position. Filter exterior pipe shall not be welded but joined with the help of flanges. Filter exterior shall be provided with all necessary pipes, valves and fittings to make a complete unit. The filter shall be provided with air release valve and pressure gauge. Gauge shall be mounted for easy reading. All the interconnecting pipe fittings and valves shall be best quality and confirm with ISI or equivalent. The tank support leg shall be of specified diameter heavy pipe welded to the bottom reinforced pad in tank bottom.

The filter medium should have a size and be of such material that it will provide satisfactory effluent, retain a maximum quantity of solids, and be readily cleaned with minimum of wash water.

The sand to be used for filters should satisfy the following norms:

1. It should be of hard and resistant quartz or quartzite and free of clay, fine particles, soft grains and dirt.
2. Ignition loss should not exceed 0.7% by weight.
3. It specific gravity should be in the range of 2.55 to 2.65.
4. Its silica content should be not less than 90%.
5. Its soluble fraction in hydrochloric acid should not exceed 5% by weight in 24 hours.
6. Wearing loss should not exceed 3%.
7. Effective size (D_{10}) shall be between 0.45mm and 0.70 mm for pressure filters.
8. The uniformity coefficient (D_{60}/D_{10}) should be between 1.3 and 1.7 in pressure filters.

The sand bed is supported on the gravel bed. It supports the sand and allows filtered water to move freely towards the underdrains. It also allows the wash water to move upward uniformly on the sand. The gravel is placed in layers having finest size on the top. The gravel in the filters should be clean, hard, durable and rounded. It should be free from clay, loam, shells and other foreign matters. It should not contain flat, thin or long pieces. It should have density of about 1600 kg/m^3.

14.7.4 Accessories

The electric control panel shall be designed in such a way that the treatment shall be operated automatically. It shall be designed to operate manually also. The control panel shall control all the chemical dozers, air blowers, pumps, etc. The panel shall be wall mounted type.

Government of Nepal
Ministry of Infrastructure Development
Department of Water Supply and Sewerage Management Office
Water Supply and Sewerage Management Office
Butwal, Rupandehi

Office Chief

14.18 BORE-HOLE DRILLING

14.18.1 General

14.18.1.1 Description of the Works

As described in Supplementary Specifications.

14.18.1.1.1 Requirements, Specification, Standards and Brand Names

The contractor shall fulfill all requirements and obligations under all Clauses of the specification applicable to the construction work involved in the contract. Neither the following Clauses of this specification the detailed description therein nor the quantities shall limit the obligations of the contractor under the accompanying conditions of contract.

Where items are not included in Bill of Quantities for any such requirements or obligations, the cost of such requirements or obligations shall be deemed to be spread over all the items of the Bill of Quantities.

All the standards mentioned herein shall be deemed to from part of this specification. All references to such standards shall be to the latest edition or revision thereof unless otherwise stated. Where a specific standard is referred to in this specification another standard will be acceptable, provided that it ensures an equal or higher quality of materials and workmanship than the standards referred to. If the contractor intends to use such alternative standard, he shall notify the Engineer thereof, submitting with his notice of the proposed standard, and shall not order any material or perform any work unless and until he has obtained the Engineer's approval of such standard. Brands name where used in the specification is only intended to define a standard of quantity and performance and the contractor may use other equivalent products approved by the Engineer.

14.18.1.1.2 Contractor's Work Program

Work program for the drilling and installation of deep tubewell, purchase of casing and well screens, development and pumping test etc. showing all the stages proposed by the contractor must be submitted at the time of agreement.

After approval by the Engineer, the works program shall be binding to the contractor. Changes in the program may be made by the contractor only after prior approval of the Engineer.

The Project shall be entitled at any time to demand change in the work program as he deems necessary for the proper and expedient performance of the works.

14.18.1.13 Other Works

The contractor shall note that during the continuance of the contract other works, not covered by this contract, will be executed by the Engineer or by other contractors. The contractor shall cooperate with the Engineer or other contractors, to ensure the satisfactory completion of the project as a whole.

14.18.2 Materials

14.18.2.1 General

The contractor shall provide all the required material for the construction of tubewell completely. Materials provided and used in the works shall be new and conforming to the qualities and kinds specified herein and or equal to approve samples. In respect of all materials used in the works currently practiced relevant standard specifications such as British standard specification (or other equivalent standard specification) shall be generally applicable.

If the contract document conflict in any way with any of the above standards, the contract documents shall have precedence and shall govern.

Government of Nepal
Ministry of Infrastructure Development
Department of Water Supply and Sewerage Management Office
Water Supply and Sewerage Management Office
Butwal, Rupandehi

Office Chief

14.18.2.2 Inspection and Testing

All materials used in the works shall be subject to inspection and tests as the Engineer may direct from time to time as the work proceeds. Only materials which are considered satisfactory by the Engineer shall be used and materials condemned or not approved by the Engineer shall be removed from the works at the contractor's cost.

14.18.2.3 Standard Specifications

Where in this specifications any material or work is required to be supplied or done in accordance with a certain standard specification, the contractor will be permitted to supply such material or to do such work in accordance with an alternative standard of his choice, provided that he has informed the Engineer and obtained the approval from the Engineer. The contractor shall not order any material or perform any work unless and until he has obtained the Engineer's approval of such standard.

14.18.3 Housing, Casing and Slotted Pipes

Unless and otherwise mentioned in BOQ, the size of housing pipe shall be of mild steel (heavy class) of min. thickness 7.0 mm with pipe lengths of 6 m. the Pipe shall be plain/ beveled ends or mild steel socketed end suitable for welding. The housing pipe shall project a distance of 400 - 600 mm above the ground level during installation. The top of the housing pipe shall have a flange welded on to which a blank flange shall bolted on at all time when the well is not attended by the Contractor.

The size of casing pipe shall be as specified in the bill of quantities and of mild steel (heavy class) of minimum thickness 7.0 mm with pipe length 3 or 6 m. having plain/ beveled ends or mild steel socketed end suitable for welding.

The housing pipe and casing pipe shall be joined by electric arc welding with MS collar/reducer of one size bigger size pipe
The housing pipe shall be 250mm diameter and 7 mm thick and 200 mm dia and 7.0 mm thick for casing pipe. Mild steel pipe with mild steel socketted ends suitable for welding. The housing pipe shall project a distance of 500 mm above the ground level. The top of the housing pipe shall have a flange welded on to which a blank flange shall be bolted.

The well screen shall be of the continuous slot wedge wire design, Johnson type, fabricated of special–shaped, manufactured in the all welded to support rod construction with electronically controlled welding system, ensuring greater fusion strength between the profile wire and support rod maintaining accurate slot opening tolerance. The wire and rods shall be of the identical material. The material shall be of SS 304 stainless steel conforming to the requirements of AISI.

The well screen shall have adequate strength to resist the external forces to which it will be subjected during and after installation. Screen openings shall be V-shaped, widening inwardly to avoid clogging during the development of the well.

The well screen shall be of heavy construction strength to set in the 200m depth. The screen shall be pipe size. Overall length shall be 3 m, end fitting shall be weld/rings, inside diameter of screen shall be 205mm, outside dia.219 mm, slot opening aperture shall be 1.3mm to 1.5mm continuous slots SS 304 stainless steel material, the percentage of slot opening shall be minimum 25 percent, wrap wire size 2.3mm x 3.5mm, supports rod size 3.8mm/42nos.

There must be a minimum length of 2 m to 6 m of 200 mm dia. casing pipe below the lowest screen pipe as a sand trap and this must be fitted with welded on conical steel plug with a solid point.

All pipes and screens shall be of the best quality and the contractor shall submit full detail concerning the specifications and sources of supply of these for approval before bringing the materials on site,

All housing and casing pipes shall be thoroughly cleaned or descaled before assembly lowering and shall be painted internally and externally with one priming coat and one top coat of an approved non toxic corrosion inhibiting paint.

All welds shall be allowed to cool before applying the necessary paint to the joints. The paint must dry before lowering the well assembly down the bore hole.

14.18.4 Tubewell Construction

14.18.4.1 General

The contractor shall drill and install the required numbers of tubewell at the site defined by the Engineer. The drilling point will be assigned by the Engineer. The contractor shall be familiar with the environment of the working place and make the necessary arrangements to complete the work in time.

The contractor shall make his own camping arrangement and find necessary access to the site and drilling site. After completion of work, the area shall be cleared by the contractor of all unnecessary materials used during construction period.

The contractor shall necessarily mobilize suitable drilling rig and accessory machineries and equipment to ensure timely completion of the said work.

The tubewell shall be drilled to the depth specified by the Engineer and shall be electrically logged, cased, screened, gravel packed, sealed, developed, tested and completed as production well.

14.18.4.2 Drilling

Drilling can be done by any of the following methods:

- Direct rotary drilling method
- Reverse rotary drilling method, and
- Percussion drilling method

It is upto the contractor to choose the suitable drilling method to drilled in the formation of the area according to their machineries and equipment bearing in mind that the works mentioned in this contract shall be completed within the stipulated time.

At first pilot hole drilling shall be carried out upto the required depth using an appropriate size drill bit.

The record of the strata encountered during the course of pilot hole drilling shall necessarily be maintained by the contractor. The lithologic samples each of 0.5 kg at an interval of 1.5 m or at the change of strata shall be collected in plastic bags. These samples should be submitted to the Engineer at the earliest possible along with lithologic log records.

After completion of drilling the pilot bore hole, the contractor, in presence of the Engineer shall carry out down the hole electrical logging (resistivity & self potential) for the verification of visual lithologic samples. Based on the lithologic samples and electrical logging data and interpretation results, the contractor shall submit the proposed well assembly (well design). Approval of this proposed design from the Engineer, must be received in written by the contractor before installation of the tubewell.

The pilot bore hole shall be enlarged (reamed) by using the appropriate diameter drill bits upto the designed depth approved by the Engineer.

The final bore hole shall be reconditioned so that all the drill cuttings shall be removed completely from the bore hole.

Verticality of the bore hole must be checked after the drilling of pilot hole and then while lowering the approved well assembly using centralizers at a maximum of 12 m spacing. The number of centralizers in each set should be three. In no case the axis of the well assembly should deviate more than 30 mm from an imaginary plumb line.

A successful tubewell should be able to yield in the range of discharge of 20-30 liters/sec to be accepted by the Engineer.

14.18.4.3 Tubewell Assembly

Immediately after drilling and reaming the bore hole to the specified diameter and depth, the contractor shall make necessary arrangement for lowering the well assembly in accordance with the design approved by the Engineer.

The Contractor shall provide all necessary materials required for the complete well assembly including housing pipe, casing pipe, well screen, collar, plug, centralizes etc. All the materials of well assembly shall be as specified and as per the prevalent practice, if not specified. Well assembly shall be approved by the Engineer before installation.

The well assembly shall be installed in the bore hole in the presence of the Engineer. After installation a verticality test shall be carried out and the permissible limit shall be 1 cm. in 40m.

14.18.4.4 Gravel Packing

The gravel pack material to be used in gravel packing, shall be composed of hard, non-calcarious, durable, well rounded particles containing no clays, silt, organic or any foreign materials. The size of gravel shall be in between 3 to 8 mm in diameter.

Immediately after lowering the well assembly into final position, the contractor shall fill the annular space between the well assembly and the wall of the bore hole with pea gravel approved by the Engineer using the continuous backwashing method to prevent bridging and reduce the possibility of damage to the tubewell assembly by sudden collapse of bridged gravel.

The gravel packing process should be continuous until the entire annular space is filled with the gravel, and then clean water should be pumped in through the casing to remove drilling mud.

Tubewell sounding must be carried out to ensure well clearance upto bottom and also the verticality of well assembly.

14.18.4.5 Well Development

After the well assembly installation and gravel packing, the well shall be developed by the contractor using the combination of the following four methods. Well development shall be carried out for a minimum of 72 hrs or as directed by the Engineer using suitable equipment of sufficient capacity.

- Backwashing (inner and outer washing)
- Hydraulic Jetting (water jetting)
- Air lift pumping (air compressor development)
- Over pumping by submersible pump

The completion of the well development shall be certified by the Engineer only when the water becomes clear and contains less than 5 (five) PPM of silt or sand particles.

14.18.4.6 Pumping Test

Following the satisfactory completion of well development, the contractor shall carry out the drawdown and recovery tests by using a suitable pump of not less than 6" dia bowl assembly. The pumping test should be carried out for a minimum of 72 hrs or as directed by the Engineer.

Government of Nepal
Ministry of Infrastructure Development
Department of Water Supply and Sewerage Management Office
Butwal, Rupandehi
Office Chief

The contractor shall perform (a) Step drawdown test, (b) Constant drawdown test and (c) Recovery test.

a) The contractor shall perform the Step drawdown test by pumping water at four different constant discharge rates of approximately 30%, 60%, 90% and 120% of the anticipated yield of well after development at the instruction of the Engineer. For each step, the contractor shall carefully and accurately record simultaneous readings of water level, time since commencement of pumping and discharge (flow) at the intervals of 10 minutes for the period of 4 hours for each step.

b) The contractor shall perform the Constant drawdown test by pumping water at a constant discharge rate of the tubewell as guided by step drawdown test. The constant pump discharges shall be measured and recorded by the contractor using a standard v notch weir or discharge meter at the interval of 1/2, 1, 1 1/2 , 2, 3, 4, 5, 7, 9, 10, 15, 20, 25, 30, 35, 45, 60, 90, and 120 minutes till the water level stabilizes itself.

c) On completion of test, the contractor shall cease pumping and accurately record the simultaneous readings of water levels in the well and the time since cessation of pumping, at the same time intervals of the pumping test, until the static water level has attained its pre-pumping level.

All test results with interpretation and graph plotted shall be handed over to the Engineer and the whole pumping test should necessarily be conducted in presence and close coordination with Engineer.

14.18.5 Measurement and Payment

If provided in the Contract, the measurement of the work under this Clause shall be measured and paid in units and contract rates as specified in the Bill of Quantities for completed works as directed and accepted by the Engineer. The cost and payment shall be deemed to have full and final compensation for all labour, equipment, tools and incidentals necessary to complete the work.

14.19 Injection Grouting (For OHT)

HYDROPHOBIC POLYURETHANE 1510, 1570, AND/OR 1572

14.19.1 General

Furnish all labor, equipment, and materials necessary and incidental thereto to perform all required operations to eliminate the flow of water by pressure injection to fill cracks, voids, and joints in concrete substrates.

14.19.2 Definition of Terms

Refusal	when a crack or void area will accept no more grout under the prevailing pumping conditions (for reasons other than the pumpability of the grout)
Return time	the time taken for a grout, under certain application conditions to completely penetrate a crack, void, or network of cracks.
Gel time	the time required for the grout to cure following the reaction with the accelerator. Gel time or cure time can be affected by temperature and amount (percentage) of accelerator mixed in the component A.

14.19.3 INJECTION PROCESS:

Fully examine the existing site conditions to ensure that all associated work can be performed without removing or relocating existing utilities, structures or structural members.

1) Remove all standing water.
2) Drill at a 45° degree angle where possible to intersect the wall/floor joint interface halfway through the thickness of the substrate (e.g. 4" deep for 8" thick slab)
3) Drilling depth should be half the thickness of the concrete member.
4) Install mechanical injection ports and secure in place at a spacing of 6- 12" inches apart (6" for hairline and 12" for wider cracks). Alternate positioning from left side to right side as you move along the crack where possible.

Extremely wide cracks (if any exist) should be covered with a surface seal prior to injection in order to contain the injection resin until cured. Under proper pumping conditions in active leak injection, the following signs should be observed in the order listed:

Office Chief

INJECTION PROCESS (Continued)

(a) Water displaced from crack/joint by the resin
(b) Water and resin mix (foamy) appearing at the crack/joint area
(c) Pure resin from crack/join

If the joint surface exhibits immediate free flow of resin while working the first packer, pause for a few minutes. In most cases the resin will react fast enough with the water and expand rapidly. The resulting resin product will heal the joint and provide a surface seal to contain the material to follow.

The contractor is responsible for estimating what duration time is adequate for grouting the voids and is responsible to prove that the void is full by attempting to inject each port to refusal.

Once the contractor is assured that the resin has reached the next injection packer or has sufficiently stopped the water as evidenced by the grout oozing out of the joint area, he should shut off the resin flow and disconnect pump pressure line and proceed to the next packer.

Follow the injection process for one to three packers, the contractor shall return to the first packer and attempt to re-inject it again. Some of the packers will take more grout, filling up more of the crack/joint area and creating a higher density void filler and water stop.

The contractor shall continue this procedure until refusal. MATERIALS

A. **Injection Ports**

Provide suitable injection ports (stainless steel/brass/zinc/plastic), buttonhead or zerk fittings, shaft and rubberized expandable grommet.

B. **Grout Injection Material**

Hydrophobic water cut-off grout based on MDI (methylene-diphenyl- isocyanate) polyurethane. (e.g. SealBoss 1510, 1570, 1572)

Grout material is to be 100% solvent free and 100% solids.
Gel time of the product is adjustable by adding a certain percentage of accelerator per the manufacturer's recommendations. Grout material shall not shrink or swell.

Grout material shall cure to a semi-flexible foam structure which is not affected by water or dryness.

Grout material shall have the capacity to expand upon contact with water to a volume of 30 to 40 times. The composition of the material is one that water is not a component of the cured foam structure

Government of Nepal
Ministry of Infrastructure Development
Department of Water Supply and Sewerage Management Office
Water Supply and Sewerage Management Office
Butwal, Rupandehi

Office Chief

SealBoss 1510

	1510	15X (Accelerator)	
Appearance	Dark Brown	Clear	
Solids	100%	100%	ASTM D 1010
Density, g/ml	1.12	0.93	ASTM D 3800-79
Flash Point, C / F	180/356	170/388	ASTM D 93-85
Viscosity, cps	160-200	20	ASTM D 2196
Mixing Ratio by Volume (1%-20% accelerator)	50-10 parts	1 part	
Solubility in Water	not		
Packaging	1 Gal 5 Gal 55 Gal	0.1 Gal 0.5 Gal	

Storage

Good storage stability for unopened containers at 15 - 30 C 58 - 85 F in dry, sun free indoors environment 3 years

shelf life.

Reaction	
Induction Time, 20C/68F	30 sec (10%)
Gel time, 20C/68F	70 sec (10%)
Induction Time, 20C/68F	15 sec (>15%)
Gel time, 20C/68F	50 sec (>15%)
Properties for Cured Product mixed with 10% Accelerator	
Expansion, %	2000-4000
Elongation, %	10-20 ASTM D638
Tensile Strength	65 psi ASTM D 638
Shear Strength	>15 psi ASTM C 273
Unconfined Compressive Strength (Sand filled)	1550 psi
Corrosiveness	Non-Corrosive
Appearance	Gold-Yellow Polyurethane Foam
Toxicity	Essentially Non-Toxic in Cured Form MDI Based

Government of Nepal
Ministry of Infrastructure Development
Department of Water Supply and Sewerage Management Office
Water Supply and Sewerage Management Office
Butwal, Rupandehi

Office Chief

Resistance to Chemicals	Resistant to Most Organic Solvents, Mild Acids, Alkali and Micro Organisms		

SealBoss 1570

Appearance	Light Yellow	Clear	
Solids	100%	100%	ASTM D 1010
Density, g/ml	1.08	0.93	ASTM D 3800-79
Boiling Point, C / F	205/400	170/340	
Flash Point, C / F	95/200	70/160	ASTM D 93-85
Viscosity, cps	180-250	20	ASTM D 2196
Mixing Ratio by Volume (2%-10% accelerator)	50-10 parts	1 part	
Solubility in Water	not		
Packaging	1 Gal 5 Gal 55 Gal	0.1 Gal 0.5 Gal	
Storage	Good storage stability for unopened containers at 15 - 30 C 58 - 85 F in dry, sun free indoors environment 2 years		
shelf life.			

Reaction	
Induction Time, 20C/68F	35 sec (10% 15X added) Gel
time, 20C/68F	140 sec (10% 15xs added)
Properties for Cured	
Product mixed with 10% Accelerator	
Expansion, %	1500-2500 (15-25 Times)
Elongation, %	250 ASTM D 638
Tensile Strength	70 psi ASTM D 638
Shear Strength	>15 psi ASTM C 273
Corrosiveness	Non-Corrosive
Appearance	Yellowish-White Polyurethane Foam
Toxicity	Essentially Non-Toxic in Cured Form, MDI Based Resistance
to Chemicals	Resistant to Most Organic Solvents, Mild Acids, Alkali and Micro Organism

C. Pump Equipment

All chemical grouting equipment shall be of a type, capacity, and mechanical condition suitable for doing the work. The equipment shall be compatible with the chemicals to be handled and shall be maintained in proper operating conditions at all times.

Government of Nepal
Ministry of Infrastructure Development
Department of Water Supply and Sewerage Management Office
Water Supply and Sewerage Management Office
Butwal, Rupandehi

Office Chief

D. **SUBMITTALS**

1) Submit all technical literature covering the chemical grout material including complete manufacturer's specifications, recommendations and test data.

2) Provide Material Safety Data Sheets on any chemical products utilized during the work of this section.

3) Injection port pattern and/or grouting method statement to Architect for approval prior to starting grouting operations.

4) Samples
   (a) Stainless steel, brass, zinc, or plastic button/zerk injection packers.

F. **Quality Assurance**

1) Qualifications: Company specializing in structural repairs, crack injection and waterproofing of cracks shall be trained by the waterproofing material's manufacturer and certified in the application of the materials.

G. **Delivery, Storage and Handling**

1) Deliver all materials in the manufacturer's sealed original containers bearing the manufacturer's name and product identification in a manner to prevent damage, breakage, water or moisture intrusion.

2) Store and handle all products of this section in strict accordance with the manufacturer's instructions and product safety regulations.

3) All equipment shall meet or exceed OSHA safety requirements and be of a size and nature which does not conflict with safe accessibility to the site.

H. **Project Conditions**

1) Do not execute the Work of this section unless the Site Engineer or Authorized Representative is present and has authorized the work to commence.
2) Do not remove any utility equipment or piping in the area while executing the work.

I. **Environmental Requirements**

1) Do not apply if the temperature is below 32°F or above 90°F unless the material manufacturer is consulted for recommendations.

J. **Owner's Requirements**

1) Execute all work in accordance with all safety requirements, approved written procedures and with the least amount of interference with the work of other trades as possible.

2) Equipment should be confined to the delivery area and all components shall be in good working order as approved manufacturer for use with the specified materials.

3) Immediately notify the Site Engineer/Owner's representative in the event of any process interruption or environmental concerns which could affect the service or application conditions relative to this work.

14.19.4 **Protection, Cleaning and Safety**

Government of Nepal
Ministry of Infrastructure Development
Department of Water Supply and Sewerage Management Office
Butwal, Rupandehi

Office Chief

1) Following a complete injection of all mechanical packers to refusal and where the visible leakage has been completely eradicated, remove all injection packers. Remove cured material where applicable and fill injection hole with rapid cement.

2) Clean all adjacent areas of excess material, powder, cement and/or droppings. Chemicals used for cleaning shall be non hazardous and non flammable such as the SealBoss R70 pump flush

3) Process grout materials using appropriate protective gear including gloves, masks, or goggles, and appropriate clothing as described and in accordance with the manufacturer's MSDS sheets.

Drawings

Office Chief

Note:

1. It is customary to bind the drawings in a separate volume, which is often larger than other volumes of the contract documents. The size will be dictated by the scale of the drawings, which must not be reduced to the extent that details are reduced illegible.

2. A simplified map showing the location of the Site in relation to the local geography, indicating major roads, posts, airports, and railroads, is helpful.

3. The construction drawings, even if not fully developed, must show sufficient details to enable bidders to understand the type and complexity of the work involved and the price the Bill of Quantities.

[Insert Drawings]

Government of Nepal

Ministry of Infrastructure Development

Department of water Supply and Sewerage Management

Water Supply and Sewerage Management Office,
Butwal, Rupandehi

Procurement of

Construction of Entire Works of Imiliya Water Supply Project, Buddhabhumi-09, Kapilvastu

Issued on: 28th September, 2026
Issued to: All Eligible Bidders
Invitation for Bids No.: BTL/01/083-84
Contract Identification No.: 02/083-84/NCB/Works/C/WSSMOBTL

Drawings

(Part of Section VI of Bid Documents)

Government of Nepal
Ministry of Infrastructure Development
Department of Water Supply and Sewerage Management
Water Supply and Sewerage Management Office
Butwal, Rupandehi

Office Chief

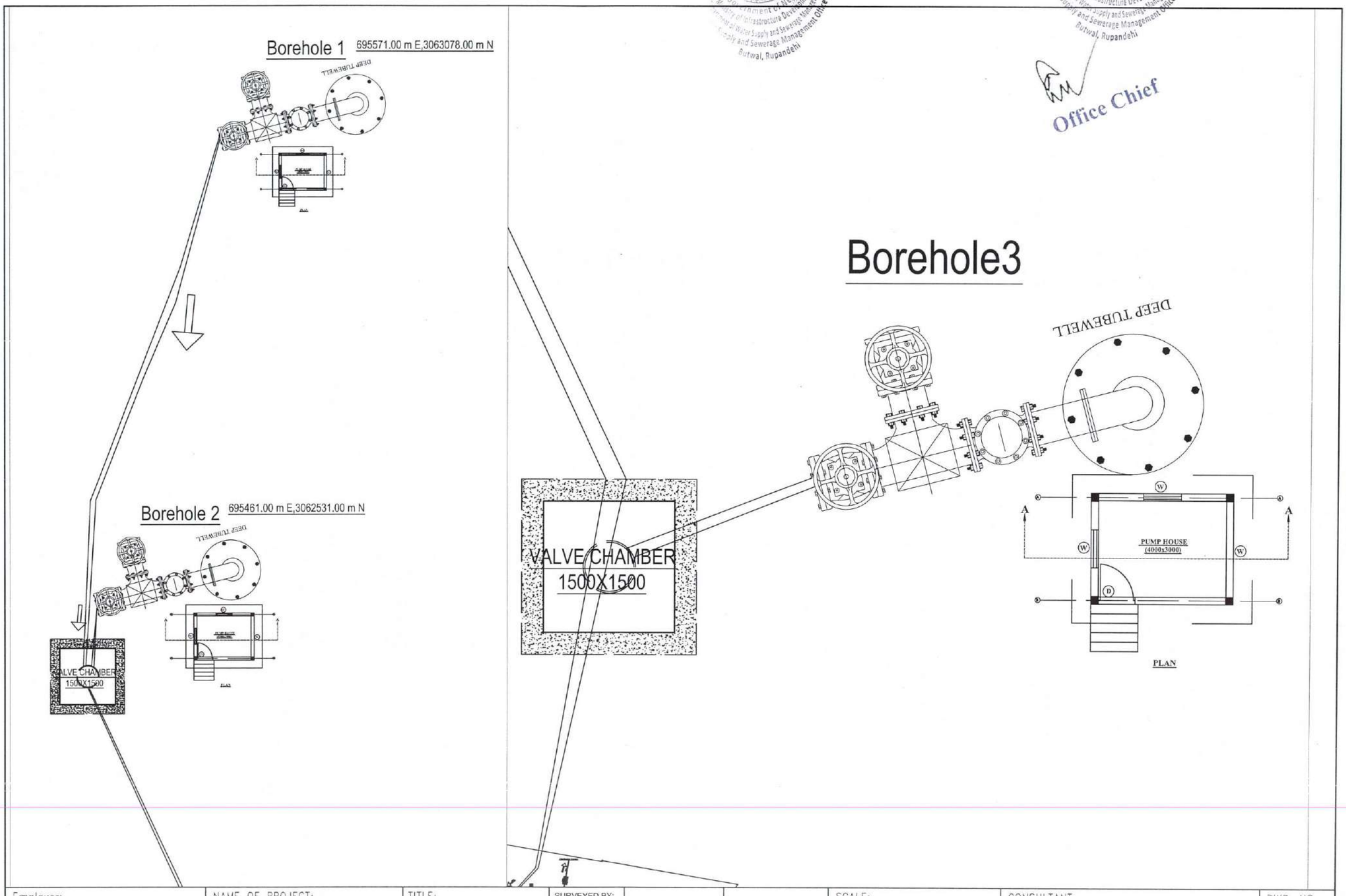

Employer:	NAME OF PROJECT:	TITLE:	SURVEYED BY:			SCALE:	CONSULTANT:	DWG. NO:
Government of Nepal Ministry of Infrastructure Development Department of Water Supply and Sewerage Management Federal Water Supply and Sewerage Management Project Butwal,Rupandehi	Imiliya Water Supply Project	Master Plan	DESIGNED BY: CHECKED BY: APPROVED BY:			Not to Scale		1

Government of Nepal
Ministry of Infrastructure Development
Department of Water Supply and Sewerage Management
Water Supply and Sewerage Management Office
Butwal, Rupandehi

Office Chief

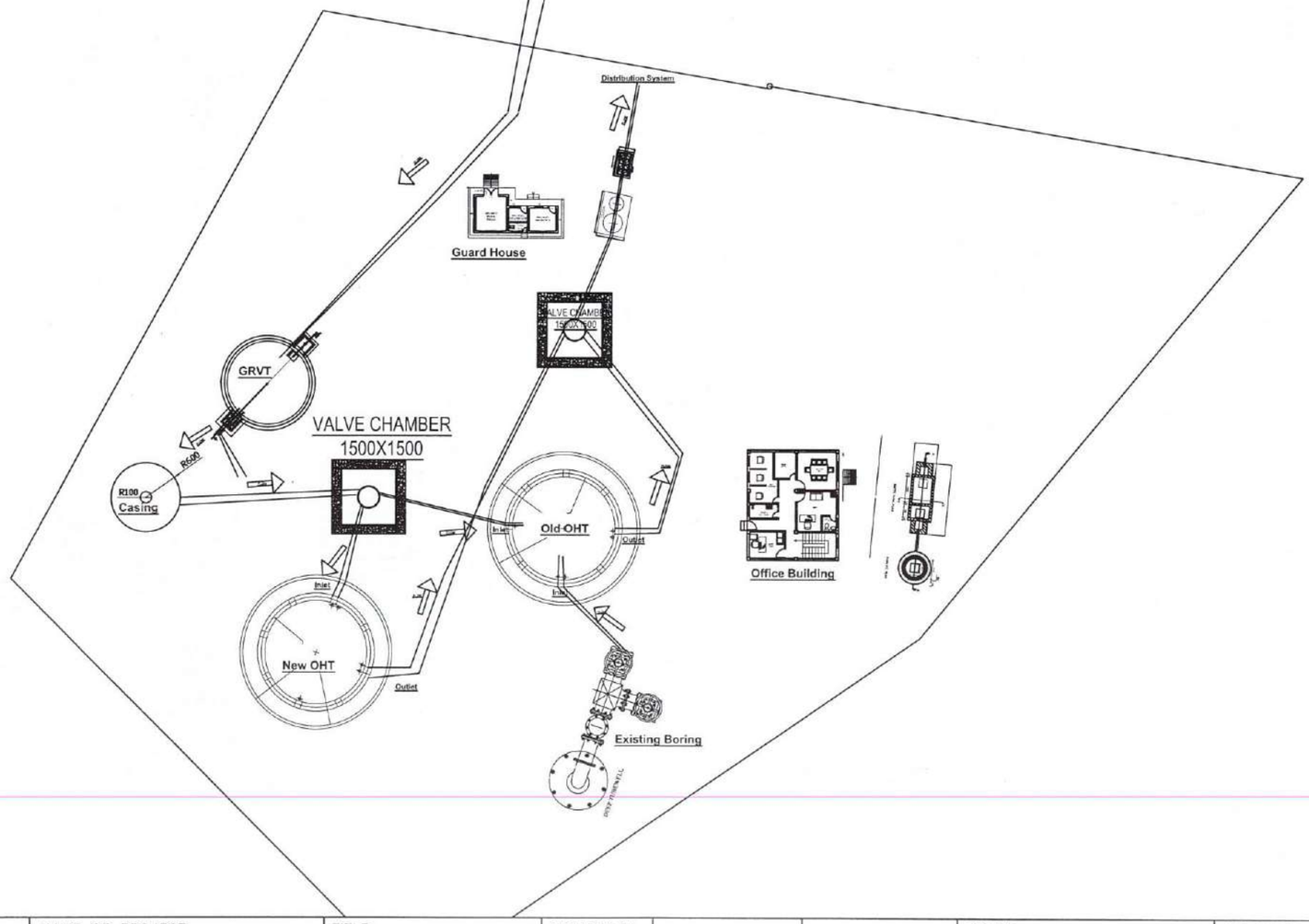

Employer:	NAME OF PROJECT:	TITLE:	SURVEYED BY:			SCALE:	CONSULTANT:	DWG. NO:
Government of Nepal Ministry of Infrastructure Development Department of Water Supply and Sewerage Management Water Supply and Sewerage Management Office Butwal,Rupandehi	Imiliya Water Supply Project	Master Plan	DESIGNED BY:			Not to Scale		2
			CHECKED BY:					
			APPROVED BY:					

Government of Nepal
Ministry of Infrastructure Development
Department of Water Supply and Sewerage Management
Water Supply and Sewerage Management Office
Butwal, Rupandehi

Office Chief

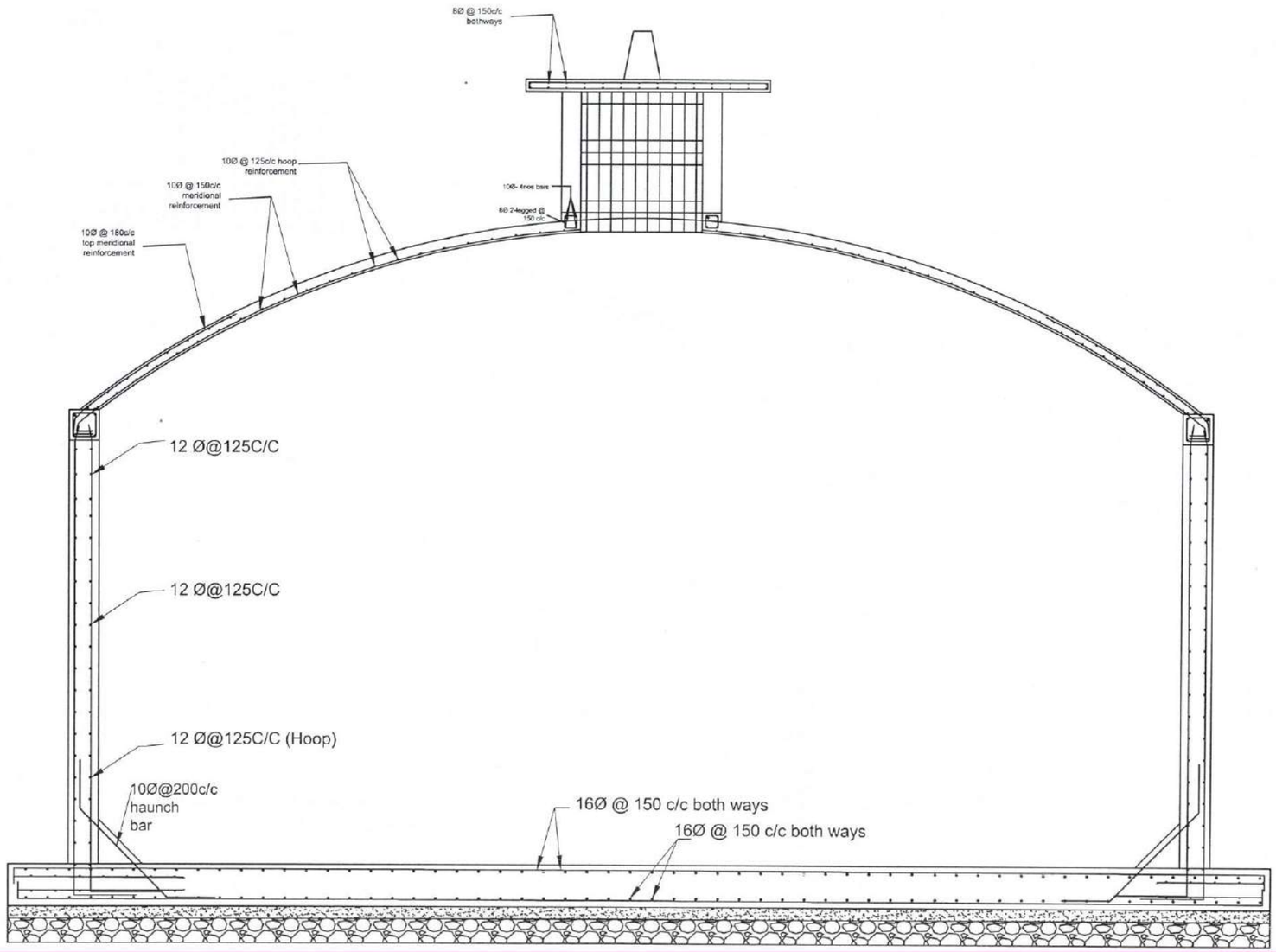

Reinforcement Details of RCC Tank (200 m³ Capacity)

Employer :		NAME OF PROJECT :	SIGNATURE	DESIGNED BY :	SCALE :	STRUCTURE NAME :	DATE :
Ministry of Infrastructure Development Department of Water Supply and Sewerage Management Water Supply and Sewerage Management Office Butwal, Rupandehi		Imiliya WSP		DRAWN BY : CHECKED BY : APPROVED BY :	Not in Scale	SEMI UNDERGROUND WATER TANK 200 CU.M	DRG NO : 3 SHEET NO :

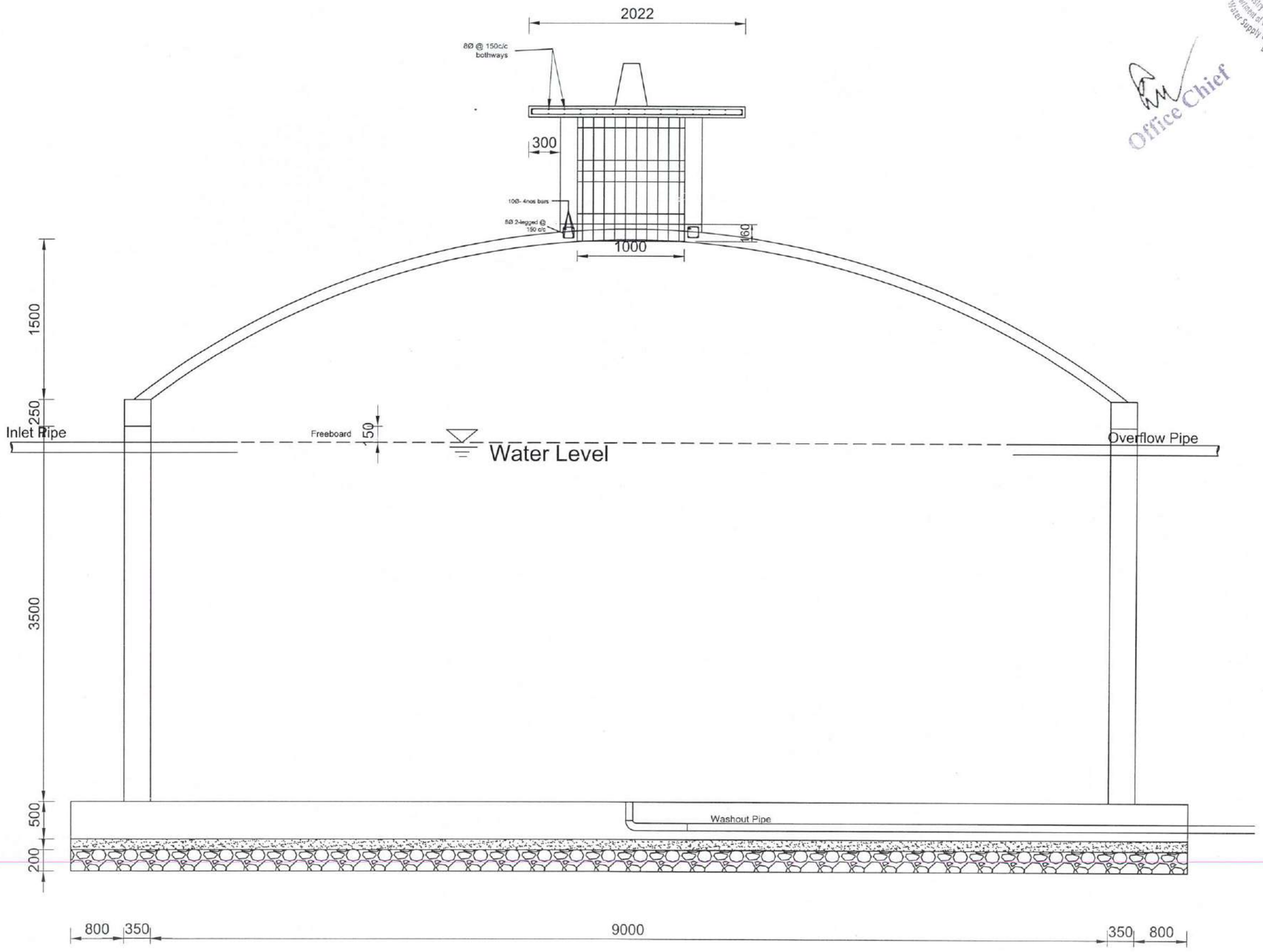

Office Chief

Government of Nepal
Ministry of Infrastructure Development
Department of Water Supply and Sewerage Management
Water Supply and Sewerage Management Office
Butwal, Rupandehi

Employer :		NAME OF PROJECT :	SIGNATURE	DESIGNED BY :	SCALE :	STRUCTURE NAME :	DATE :
Ministry of Infrastructure Development Department of Water Supply and Sewerage Management Water Supply and Sewerage Management Office Butwal, Rupandehi		Imiliya WSP		DRAWN BY : CHECKED BY : APPROVED BY :	Not in Scale	SEMI UNDERGROUND WATER TANK 200 CU.M	DRG NO : SHEET NO : 2

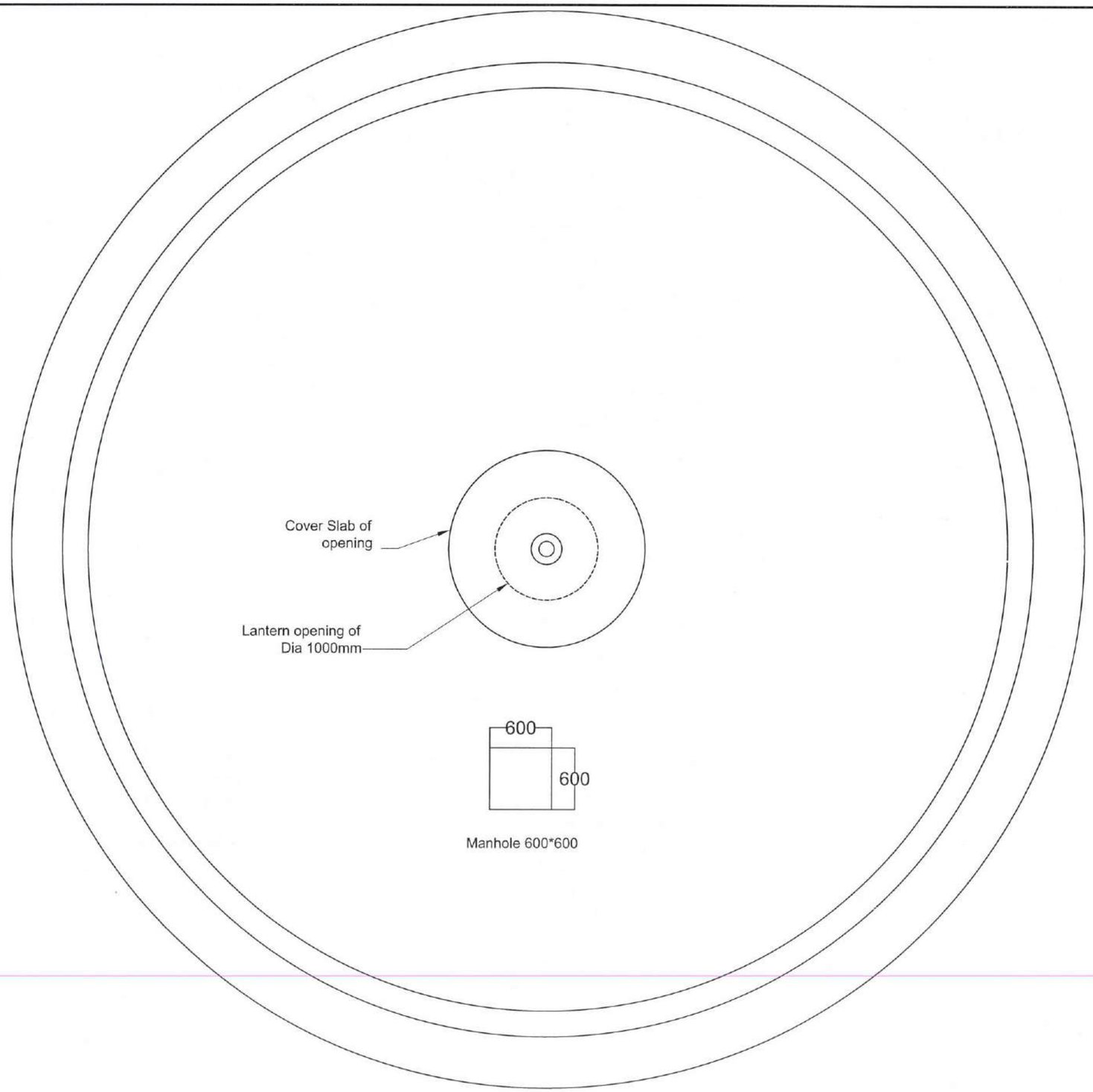

Government of Nepal
Ministry of Infrastructure Development
Department of Water Supply and Sewerage Management
Water Supply and Sewerage Management Office
Butwal, Rupandehi
Office Chief

Employer :	NAME OF CONSULTANT :	NAME OF PROJECT :	SIGNATURE	DESIGNED BY :	SCALE :	STRUCTURE NAME :	DATE :
Ministry of Infrastructure Development Department of Water Supply and Sewerage Management Water Supply and Sewerage Management Office Butwal, Rupandehi		Imiliya WSP		DRAWN BY : CHECKED BY : APPROVED BY :	Not in Scale	SEMI UNDERGROUND WATER TANK 200 CU.M	DRG NO : 1 SHEET NO :

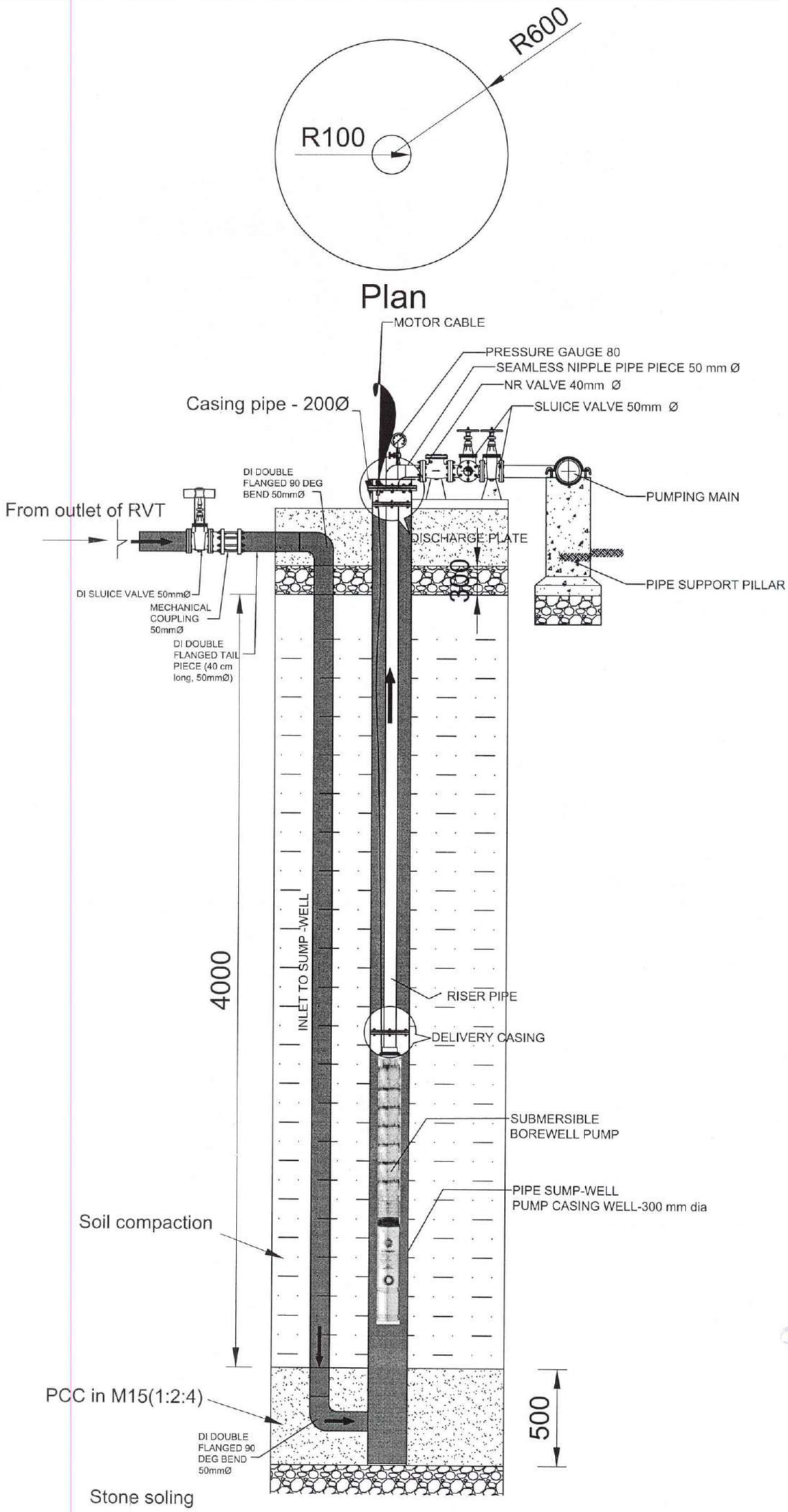

Pump casing well Sectional View

Office Chief

Government of Nepal
Ministry of Water Supply and Sewerage Management
Department of Water Supply and Sewerage Management Office
Butwal, Rupandehi

Employer :	Ministry of Infrastructure Development DEPARTMENT OF WATER SUPPLY AND SEWERAGE MANAGEMENT WATER SUPPLY AND SEWERAGE MANAGEMENT OFFICE , BUTWAL
NAME OF PROJECT :	IMLIYA WSP
SIGNATURE	
DESIGNED BY :	
DRAWN BY :	
CHECKED BY :	
APPROVED BY :	
SCALE :	NOT TO SCALE
STRUCTURE NAME :	WELL CONSTRUCTION FOR PUMP CASING
DATE :	
DRG NO :	
SHEET NO :	1

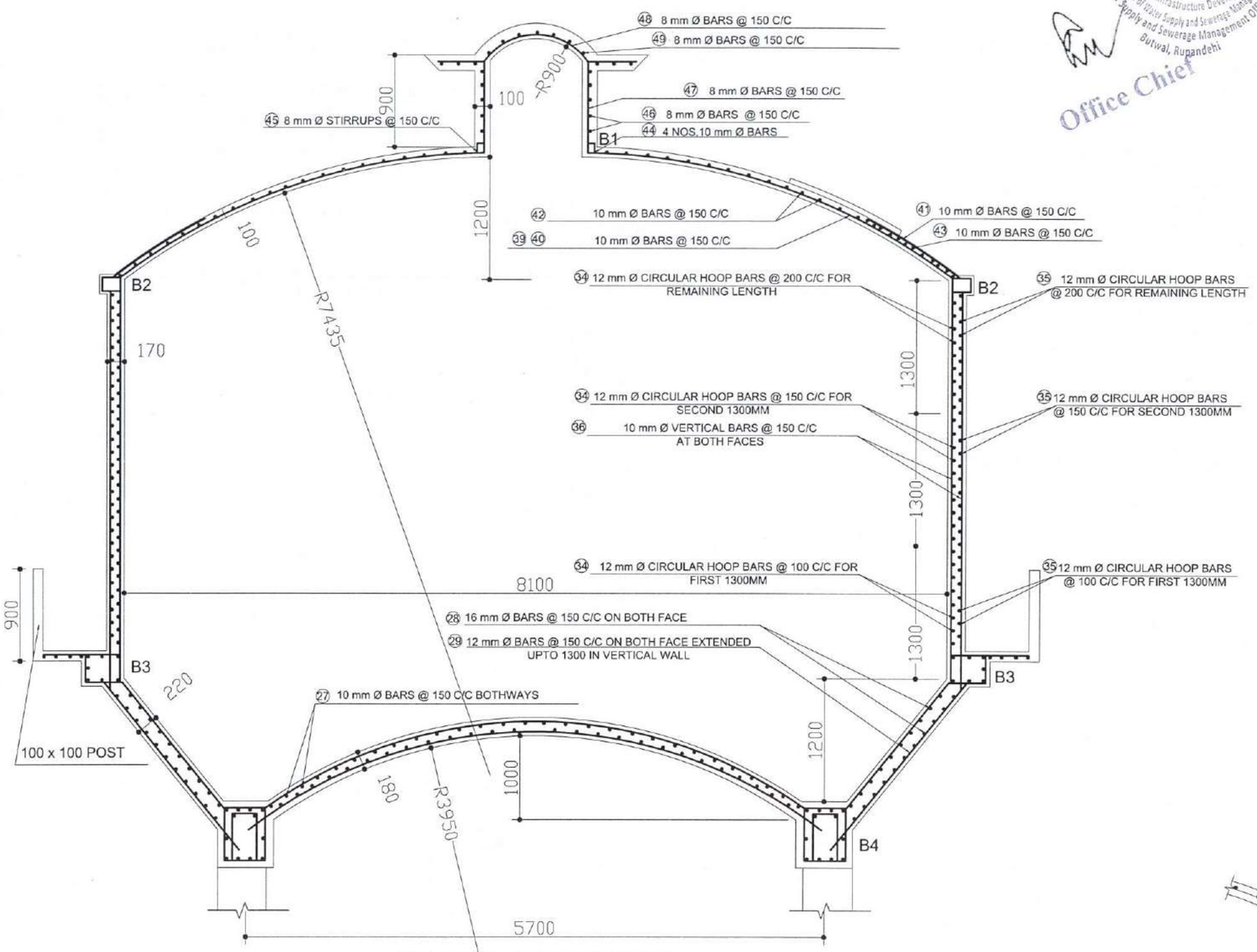

SECTION OF RESERVOIR

SCALE 1:50

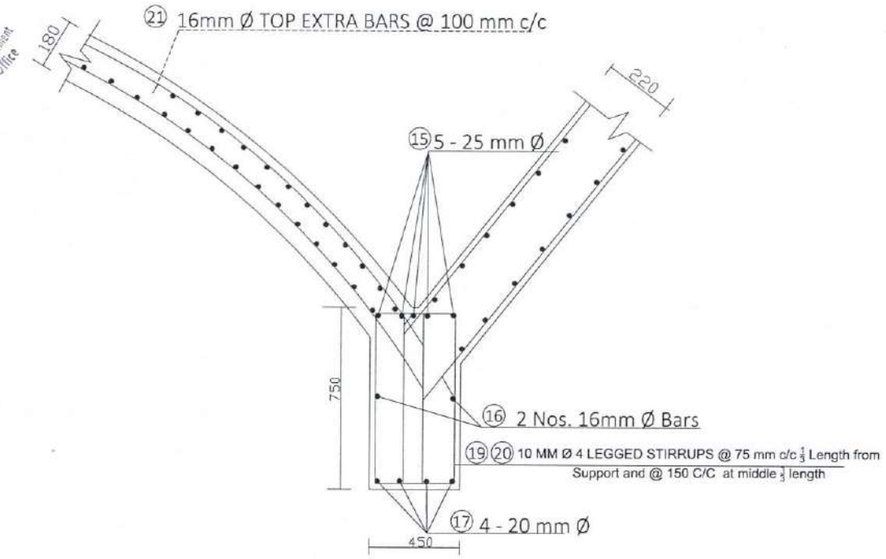

SECTION OF RING GIRDER B4 AT SUPPORT

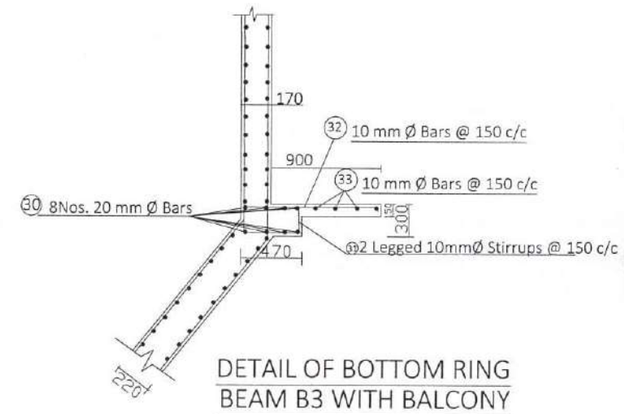

DETAIL OF BOTTOM RING BEAM B3 WITH BALCONY

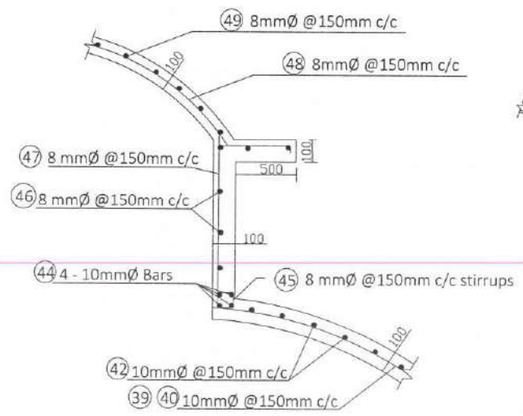

DETAIL OF B1

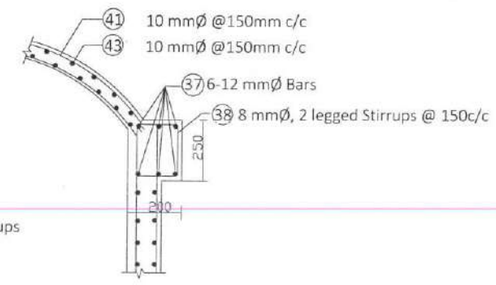

DETAIL OF TOP RING BEAM B2

Notes:

1. Concrete mix. used is M25
2. Rebars Used are TMT Fe 415
3. Cover should be 20mm according to IS 456: 2000
4. Details of B1, B2, B3 and B4 are given in related drawing and should be read in conjunction.
5. If any discrepancy is found it should be clarified immediately from the consultant.
6. Bearing Capacity of soil shall be finalized before construction start.

Employer:	SUB – PROJECT:	TITLE:	SURVEYED BY:			SCALE:	CONSULTANT:	DWG. NO:
Government of Nepal Ministry of Infrastructure Development Department of Water Supply and Sewerage Management Water Supply and Sewerage Management Office Butwal,Rupandehi	Imiliya WSP,Kapilbastu	DETAIL OF OVERHEAD TANK 225 CU.M	DESIGNED BY: CHECKED BY: APPROVED BY:			1:50		1

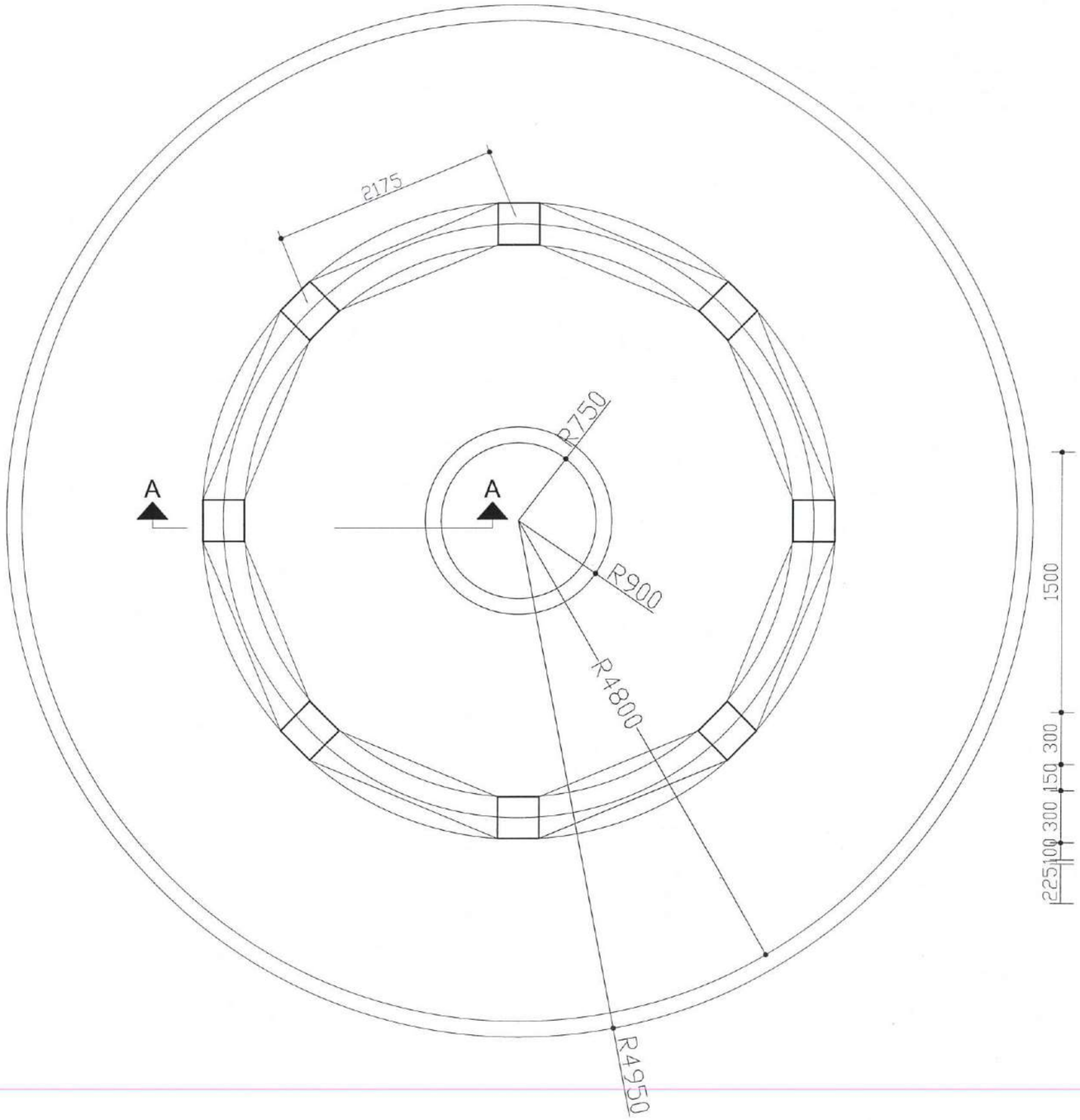

FOUNDATION PLAN

SCALE 1:50

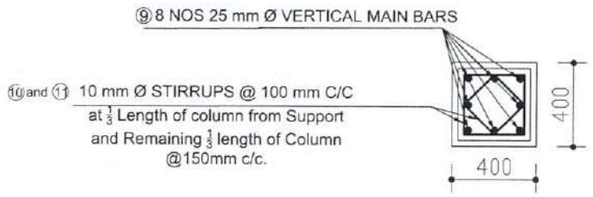

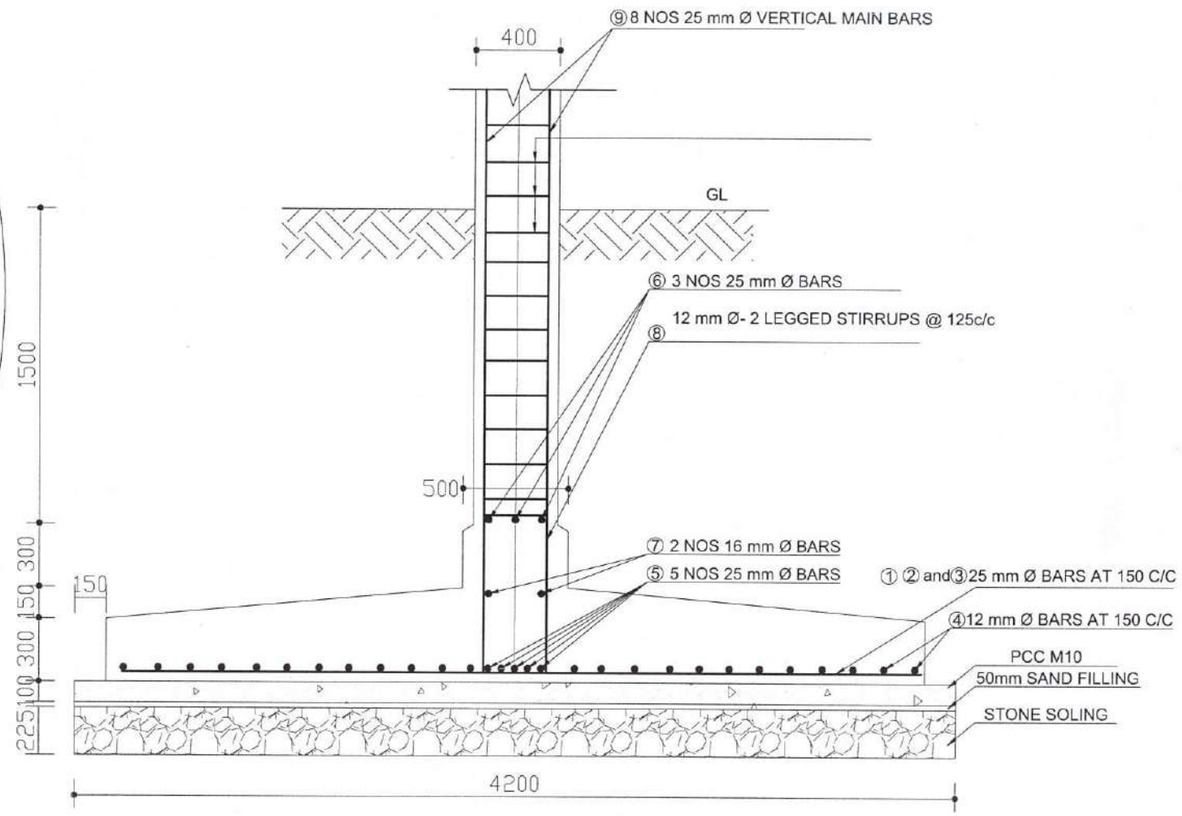

SECTION A-A

SCALE 1:30

Office Chief

Government of Nepal
Ministry of Infrastructure Development
Department of Water Supply and Sewerage Management
Water Supply and Sewerage Management Office
Butwal, Rupandehi

Notes:

1. Concrete mix. used is M25
2. Rebars Used are TMT Fe 415
3. Cover should be 20mm according to IS 456: 2000
4. Details of B1, B2, B3 and B4 are given in related drawing and should be read in conjunction.
5. If any discrepancy is found it should be clarified immediately from the consultant.
6. Bearing Capacity of soil shall be finalized before construction start.

Employer:	PROJECT:	TITLE:	SURVEYED BY:			SCALE:	CONSULTANT:	DWG. NO:
Government of Nepal Ministry of Infrastructure Development Department of Water Supply and Sewerage Management Water Supply and Sewerage Management Office Butwal,Rupandehi	Imiliya WSP,Kapilbastu	FOUNDATION REINFORCEMENT DETAILS OVERHEAD TANK 225 CU.M	DESIGNED BY:			1:50		2
			CHECKED BY:					
			APPROVED BY:					

Government of Nepal
Ministry of Infrastructure Development
Department of Water Supply and Sewerage Management
Water Supply and Sewerage Management Office
Butwal, Rupandehi
Office Chief

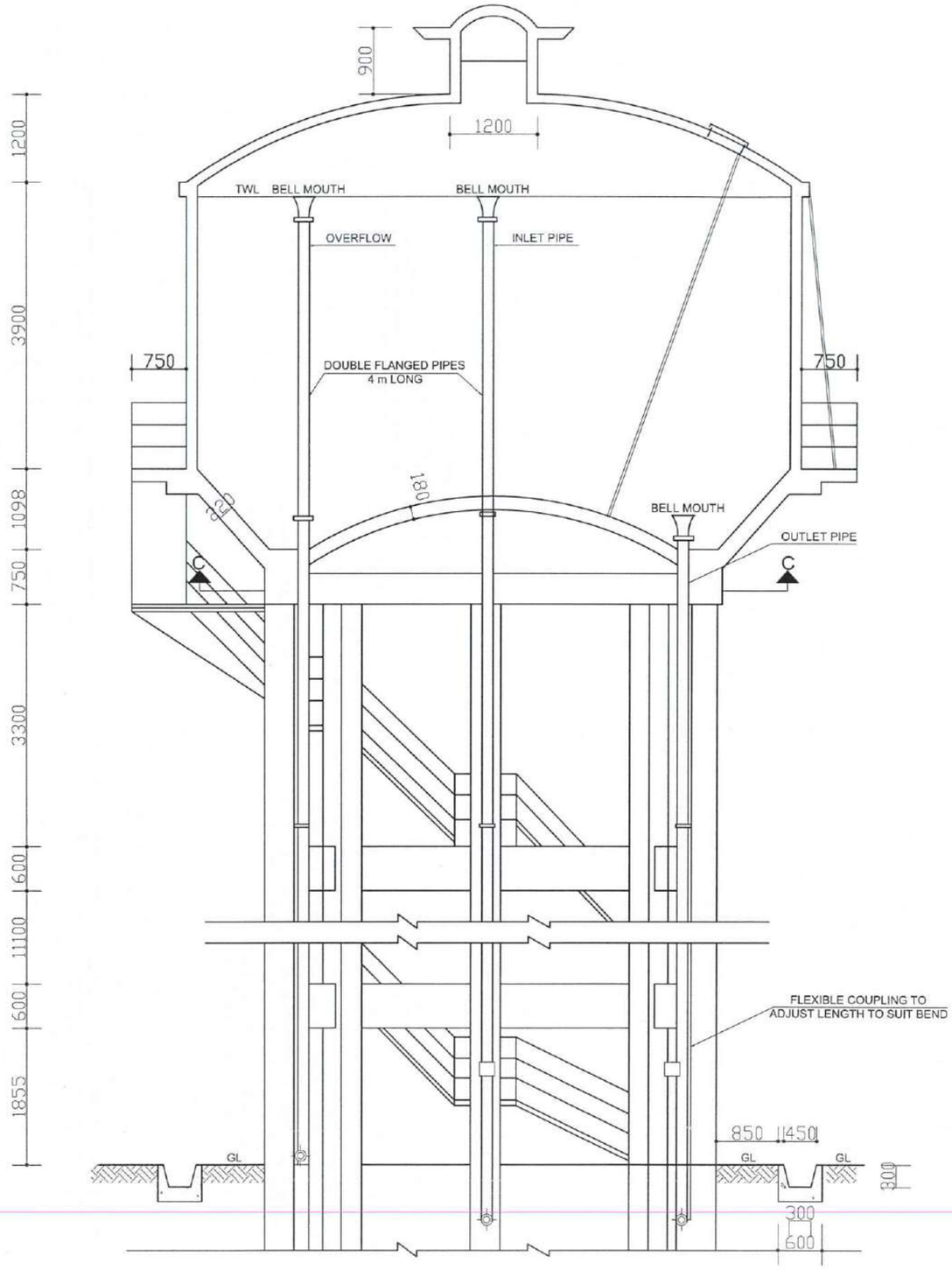

SECTION AT A-A

SCALE 1:50

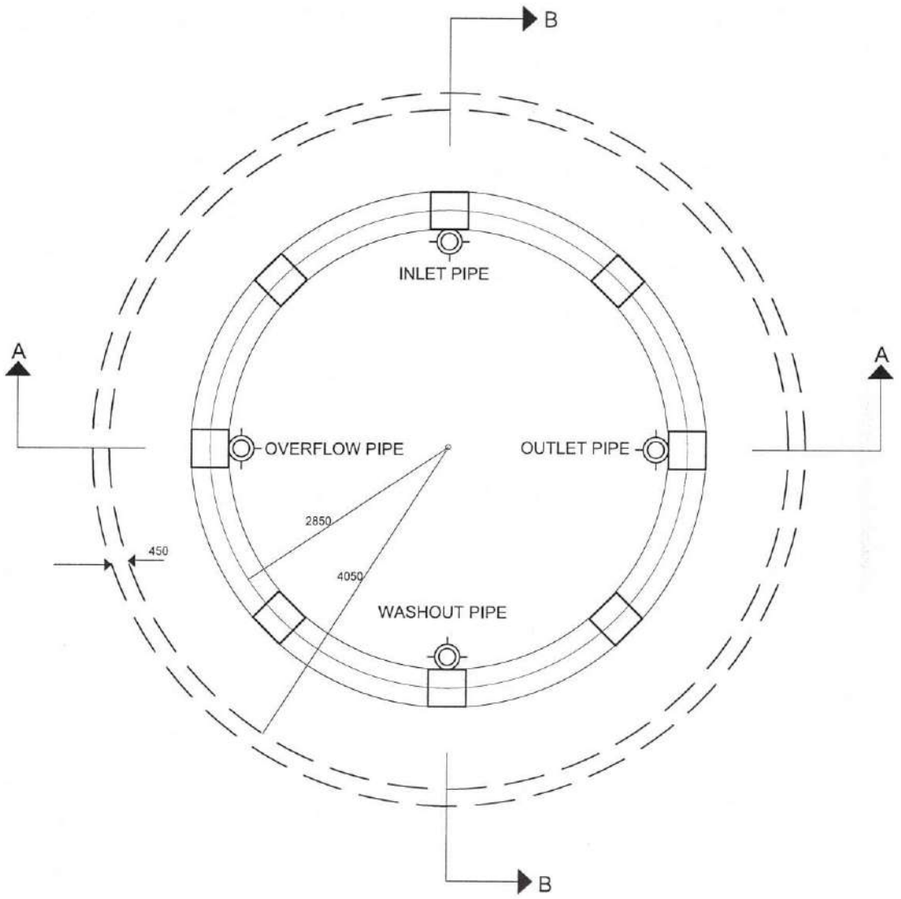

SECTION AT C-C

SCALE 1:50

Employer:	PROJECT:	TITLE:	SURVEYED BY:			SCALE:	CONSULTANT:	DWG. NO:
Government of Nepal Ministry of Infrastructure Development Department of Water Supply and Sewerage Management Water Supply and Sewerage Management Office Butwal,Rupandehi	Imiliya WSP,Kapilbastu	DETAIL OF SECTION OVERHEAD TANK 225 CU.M	DESIGNED BY: CHECKED BY: APPROVED BY:			As Shown		6

Office Chief

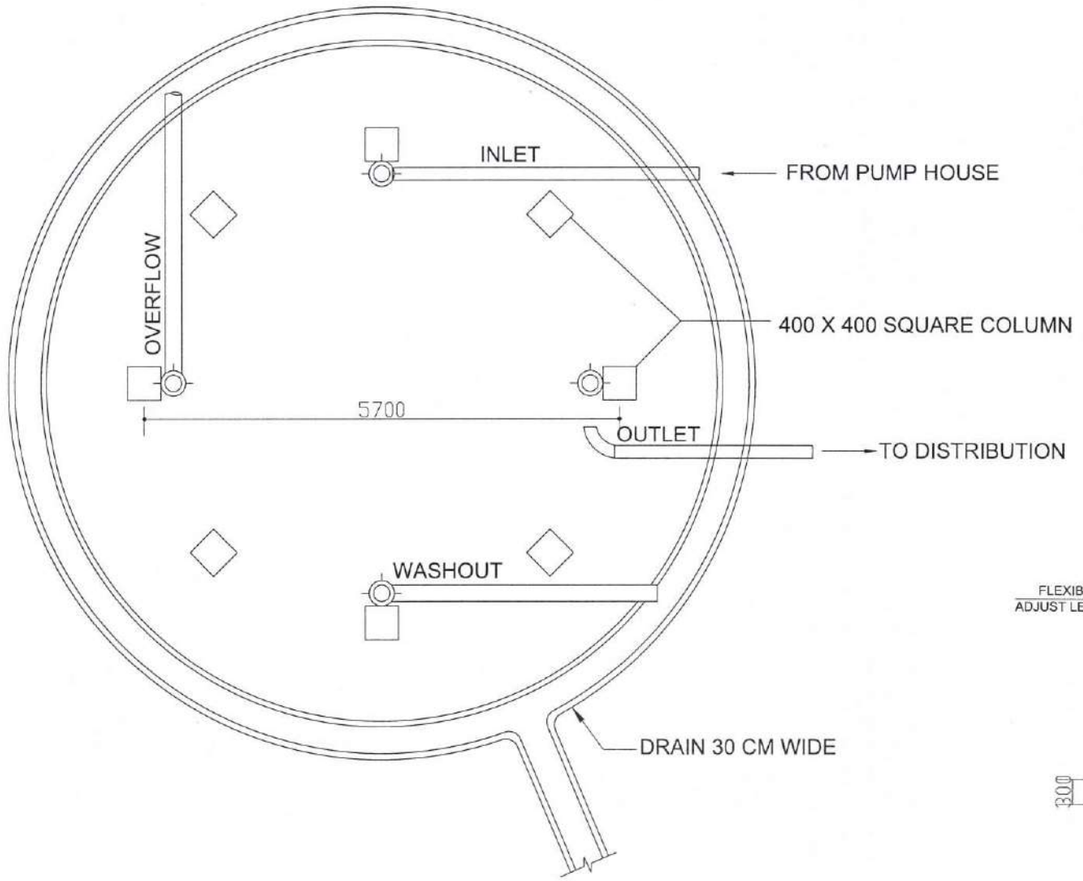

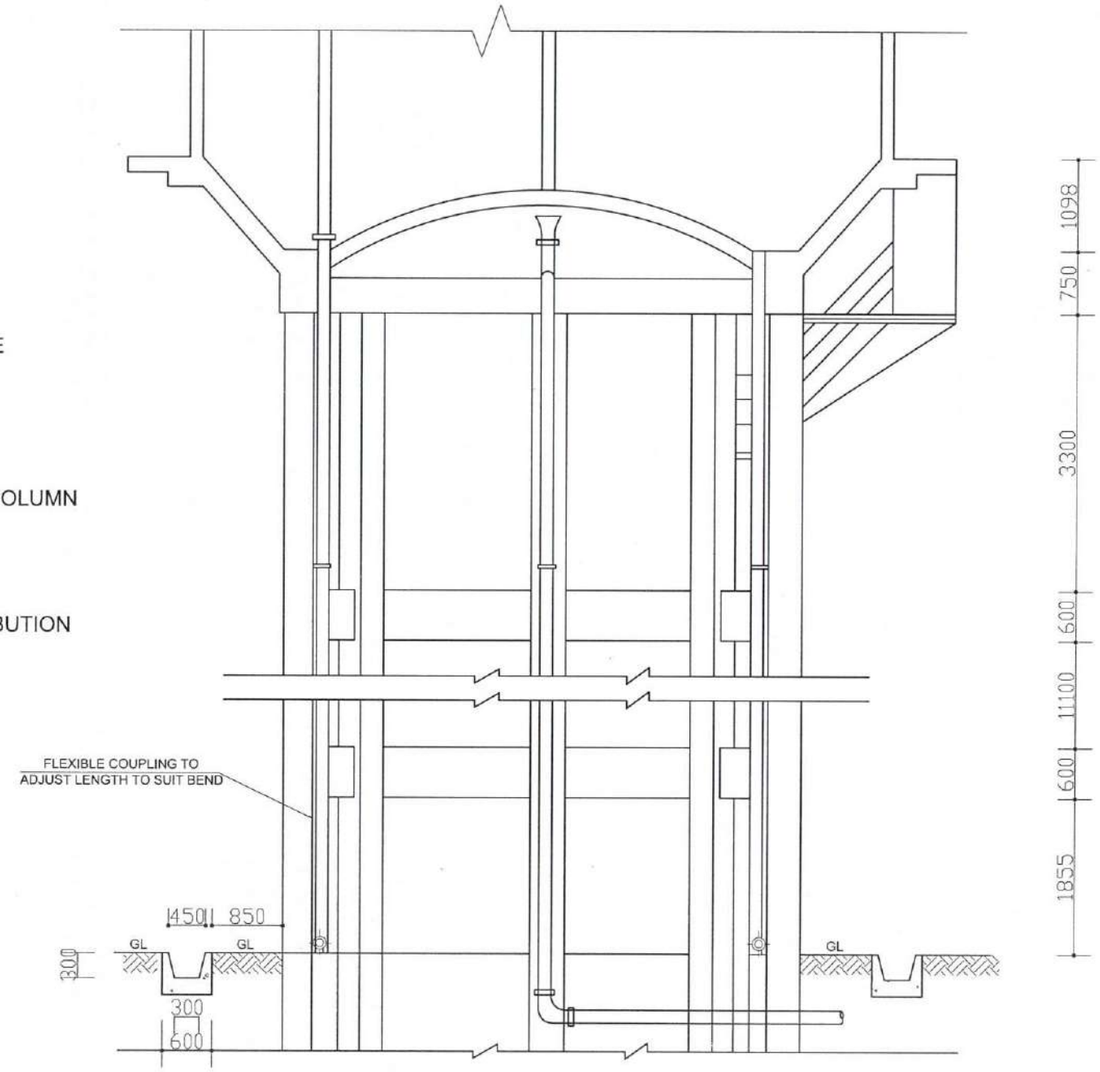

SECTION AT A-A

SCALE 1:75

Employer:	PROJECT:	TITLE:	SURVEYED BY:			SCALE:	CONSULTANT:	DWG. NO:
Government of Nepal Ministry of Infrastructure Development Department of Water Supply and Sewerage Management Water Supply and Sewerage Management Office Butwal,Rupandehi	Imiliya WSP,Kapilbastu	DETAIL OF SECTION OVERHEAD TANK 225 CU.M	DESIGNED BY: CHECKED BY: APPROVED BY:			As Shown		7

Government of Nepal
Ministry of Infrastructure Development
Department of Water Supply and Sewerage Management
Water Supply and Sewerage Management Office
Butwal, Rupandehi
Office Chief

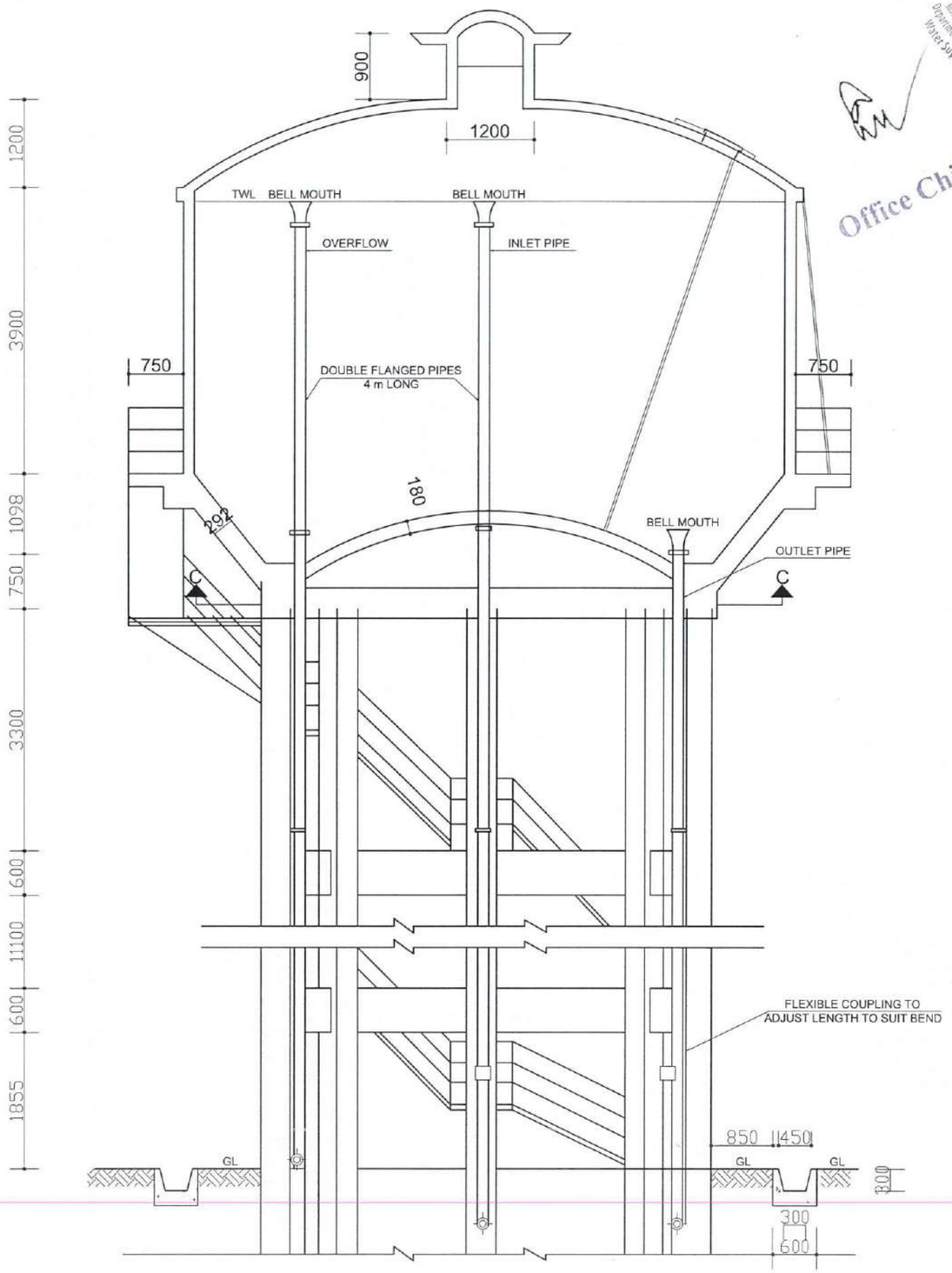

SECTION AT A-A

SCALE 1:75

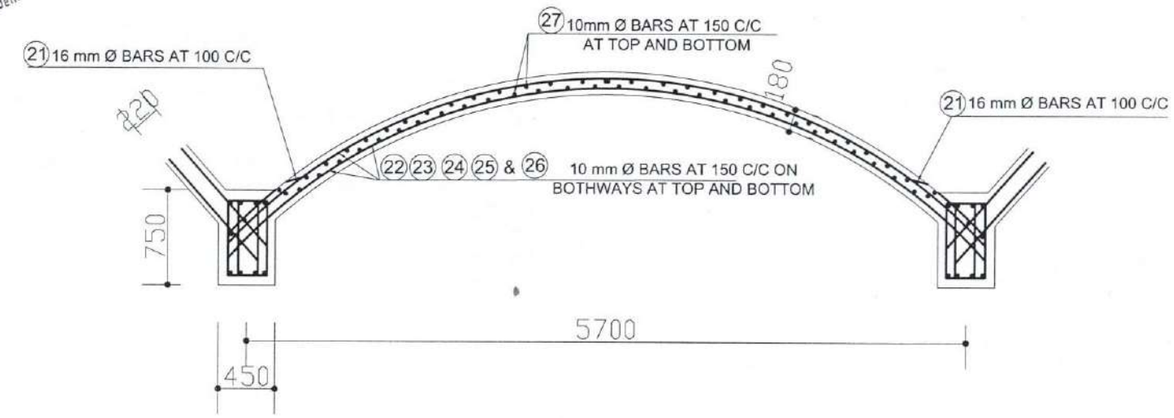

TOTAL REINFORCEMENTS	
(22)	2 x 7
(23)	2 x 7
(24)	2 x 14
(25)	2 x 28
(26)	2 x 56
(27) rings	2 x 20

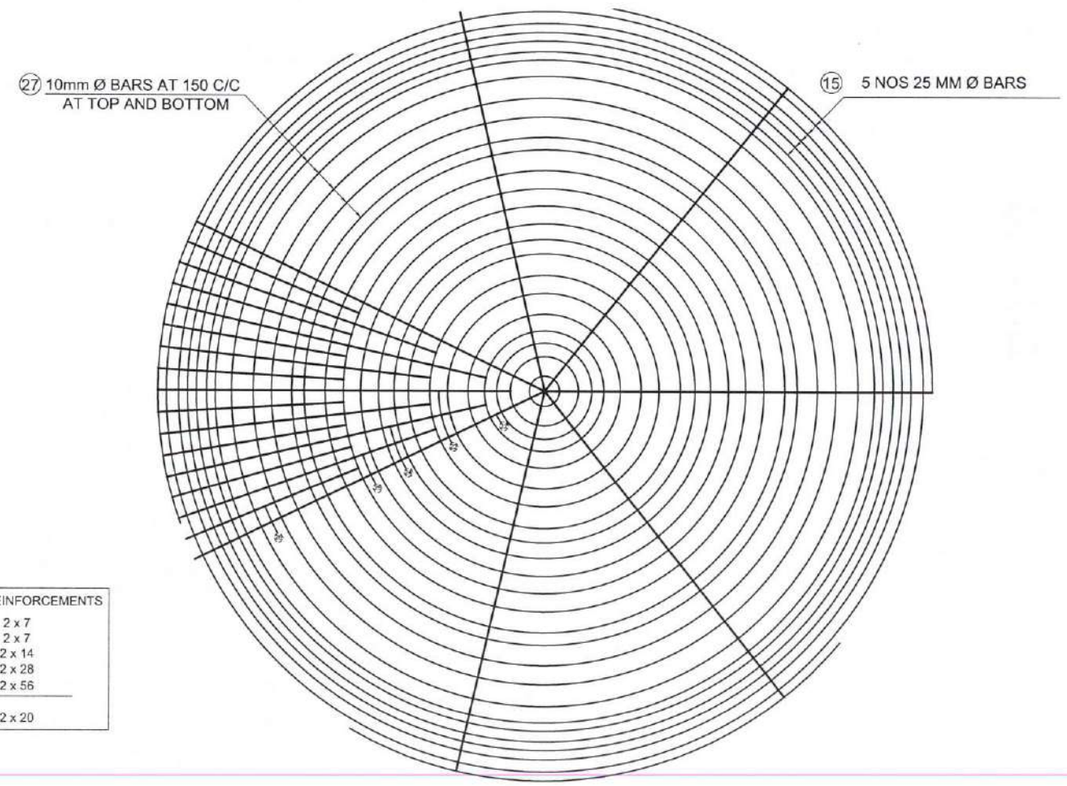

BOTTOM DOME PLAN

SCALE 1:50

Employer:	PROJECT:	TITLE:	SURVEYED BY:			SCALE:	CONSULTANT:	DWG. NO:
Government of Nepal Ministry of Infrastructure Development Department of Water Supply and Sewerage Management Water Supply and Sewerage Management Office Butwal,Rupandehi	Imiliya WSP,Kapilbastu	BOTTOM DOME REINFORCEMENT DETAILS OVERHEAD TANK 225 CU.M	DESIGNED BY: CHECKED BY: APPROVED BY:			As Shown		8

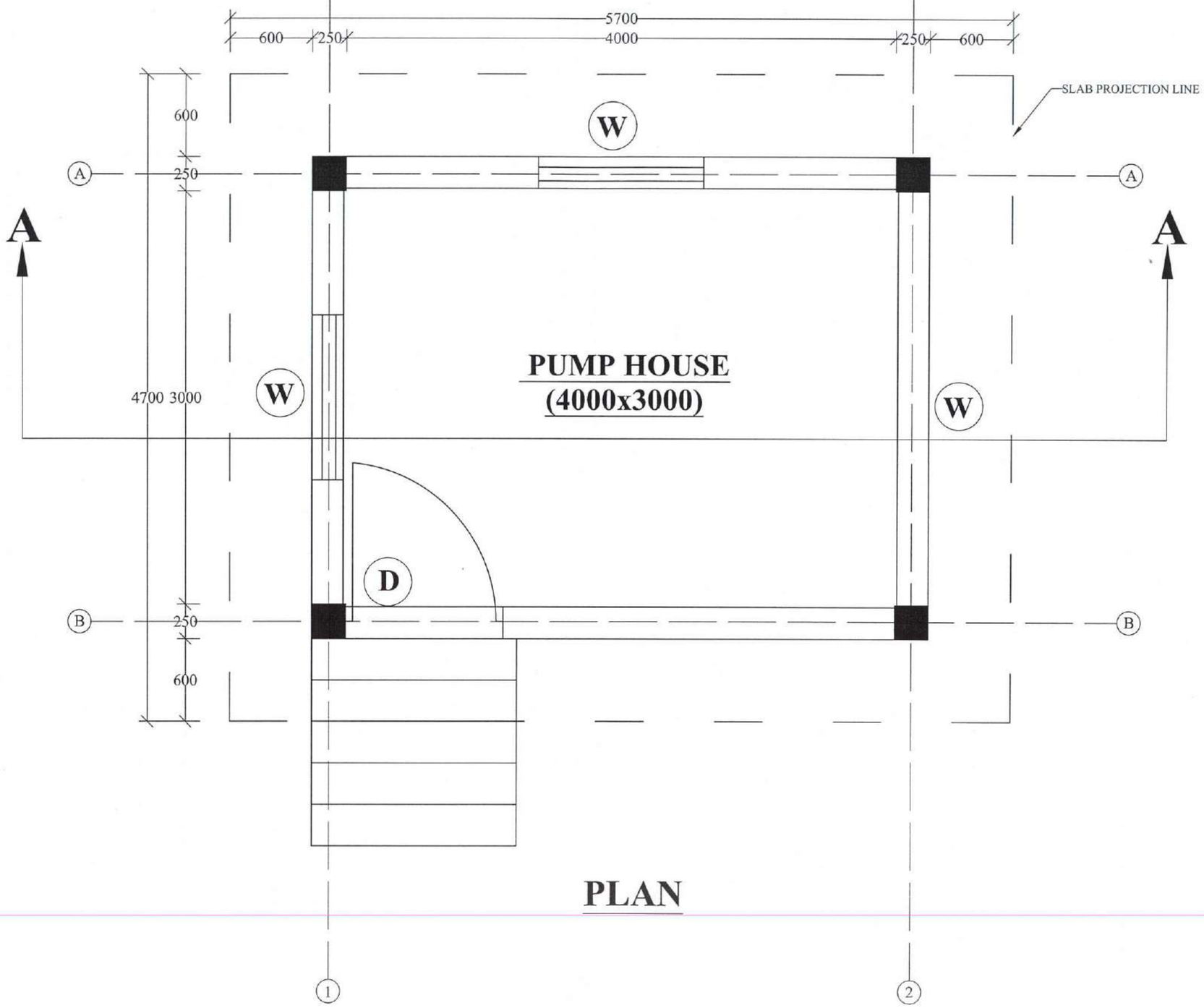

PLAN

Government of Nepal
Ministry of Infrastructure Development
Department of Water Supply and Sewerage Management
Water Supply and Sewerage Management Office
Butwal, Rupandehi

Office Chief

Employer:	NAME OF PROJECT:	TITLE:	SURVEYED BY:			SCALE:	CONSULTANT:	DWG. NO:
Government of Nepal Ministry of Infrastructure Development Department of Water Supply and Sewerage Management Water Supply and Sewerage Management Office Butwal,Rupandehi	Imiliya WSP	Pump House	DESIGNED BY: CHECKED BY: APPROVED BY:			Not in Scale		1

D : 1150X2130(Frame Size :100x75)
W : 1200X1500(Frame Size :100x75)

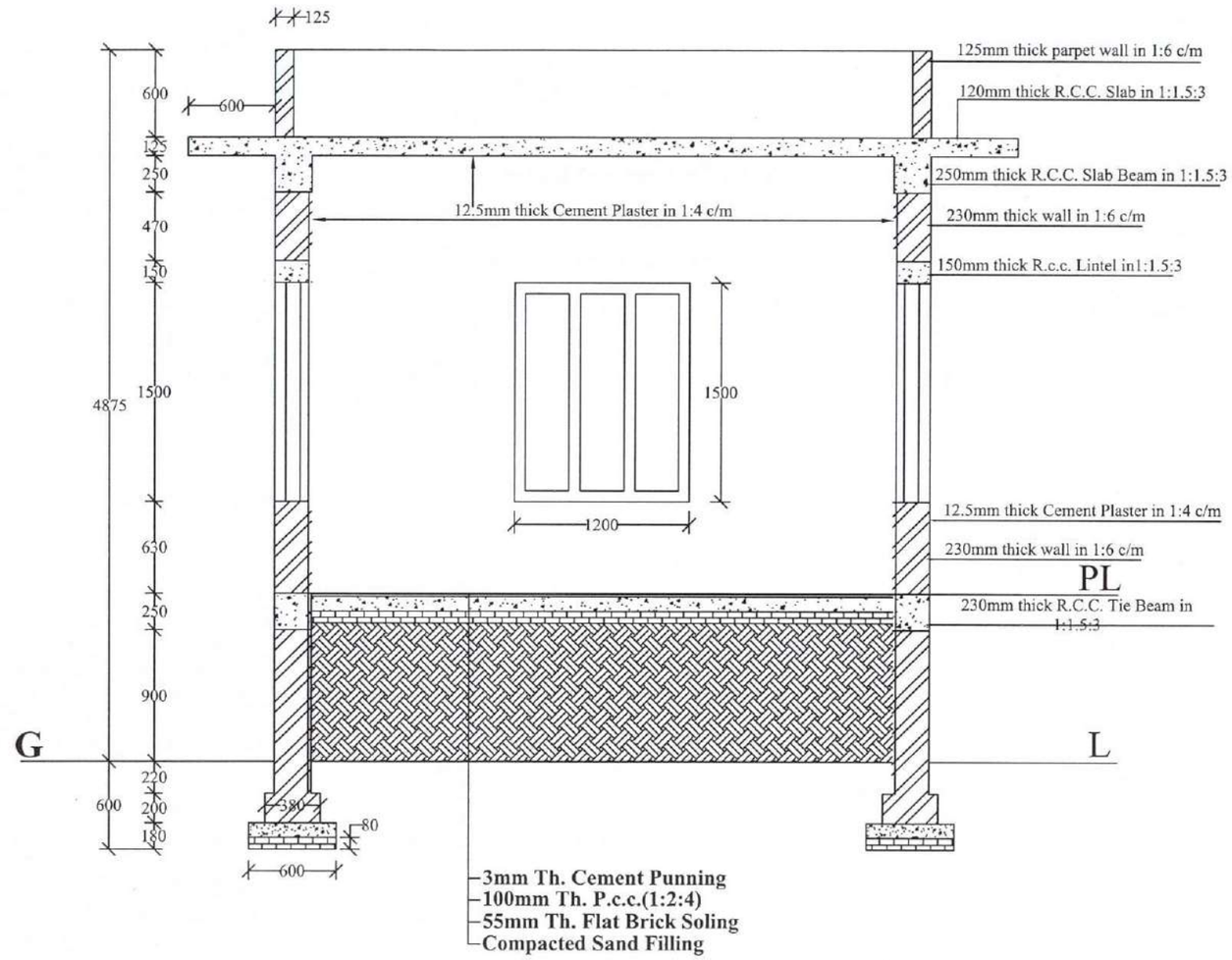

SECTION AT AA

Government of Nepal
Ministry of Infrastructure Development
Department of Water Supply and Sewerage Management
Water Supply and Sewerage Management Office
Butwal, Rupandehi
Office Chief

Employer:	NAME OF PROJECT:	TITLE:	SURVEYED BY:			SCALE:	CONSULTANT:	DWG. NO:
Government of Nepal Ministry of Infrasructure Development Department of Water Supply and Sewerage Management Water Supply and Sewerage Management Office Butwal,Rupandehi	Imiliya WSP	Pump House	DESIGNED BY: CHECKED BY: APPROVED BY:			Not in Scale		2

Government of Nepal
Ministry of Infrastructure Development
Department of Water Supply and Sewerage Management
Water Supply and Sewerage Management Office
Butwal, Rupandehi

Deep Bore 1

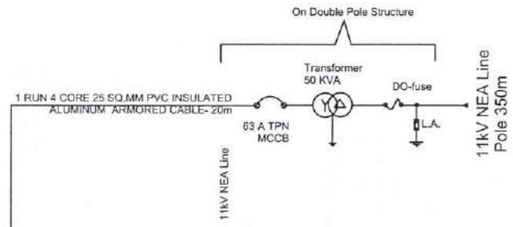

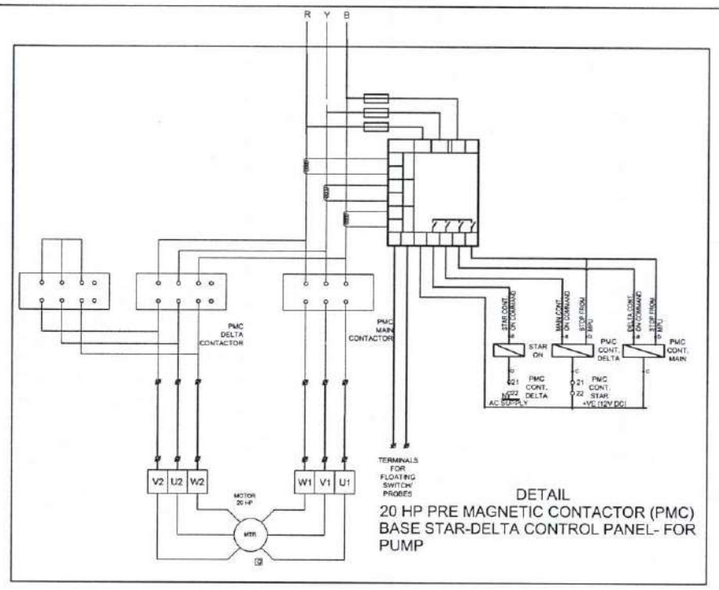

DETAIL
20 HP PRE MAGNETIC CONTACTOR (PMC)
BASE STAR-DELTA CONTROL PANEL- FOR PUMP

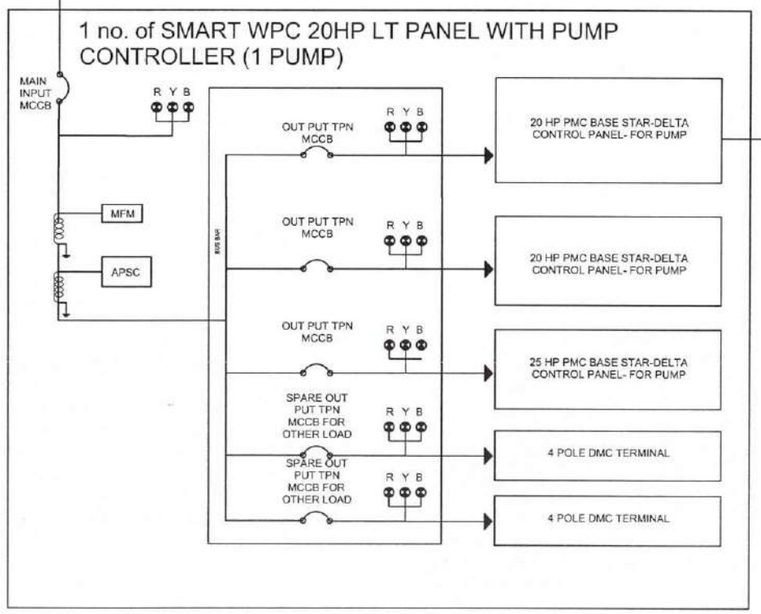

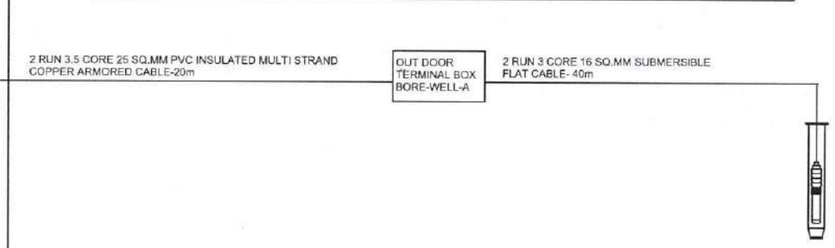

60/75/100 Amp Panel Board with copper Busbar and hardware (900mm * 1200mm*230)
63 Amp TPN MCCB
Electronic Digital Volt Meter
Electronic Digital Ammeter
C.T. coil 60-100/5 Amp
Indication LED Light
volt meter selector switch
Amp meter Selector switch
Amp glass fuse with holder
Kilo watt hour energy meter 3 phase
63 A TPN MCCB,25kA
Pre-magnetic Contactor based Star Delta 20 HP Starter module
16/32 A DP MCB
16A SP MCB
63 A TPN 4 Pole manual changeover switch

FEATURES (Pump control):
Microcontroller based technology
Digital meter for Volt, Amp, Run Hr
Inbuilt MCB/ MCCB
Wide Voltage range operating 170-450 VAC
Auto/ manual/ bypass mode setting
PROTECTIONS:
Over/ Under voltage (user setting mode)
Overload (user setting mode)
Single Phasing/ Reveres Phasing
Phase Unbalance
Dry run protection features added

Employer:	PROJECT NAME:	DRAWING TITLE:	DESIGNED BY:	CHECKED BY:	SCALE:	PREPARED BY:	DATE :
Government of Nepal Ministry of Infrastructure Development Department of Water Supply and Sewerage Management Water Supply and Sewerage Management Office Butwal,Rupandehi	Imiliya Water Supply Project, Kapilbastu	Electrical Drawing	DRAWN BY:	APPROVED BY:	Not in scale		DRG. NO. :
							SHEET NO. : EW-1

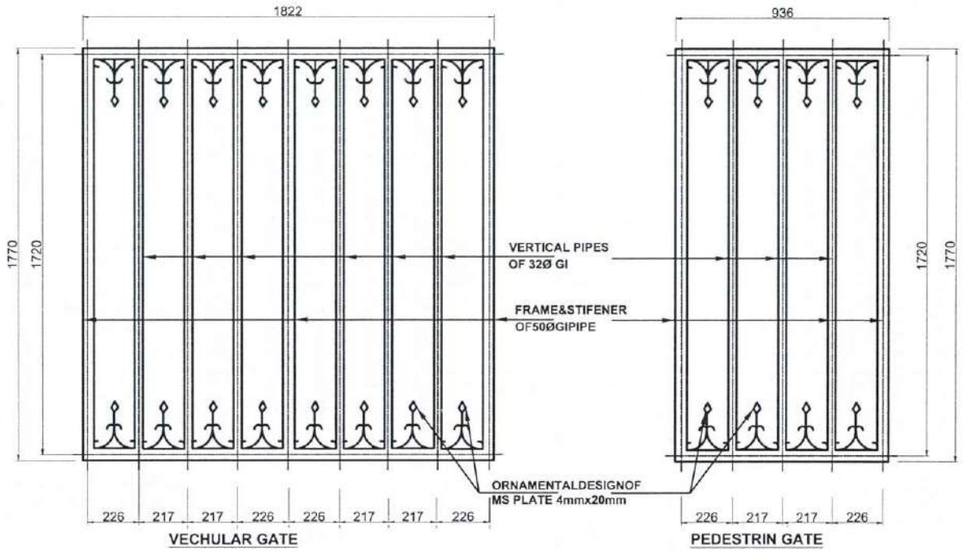

DESIGN PATTERN OF MAIN GATES

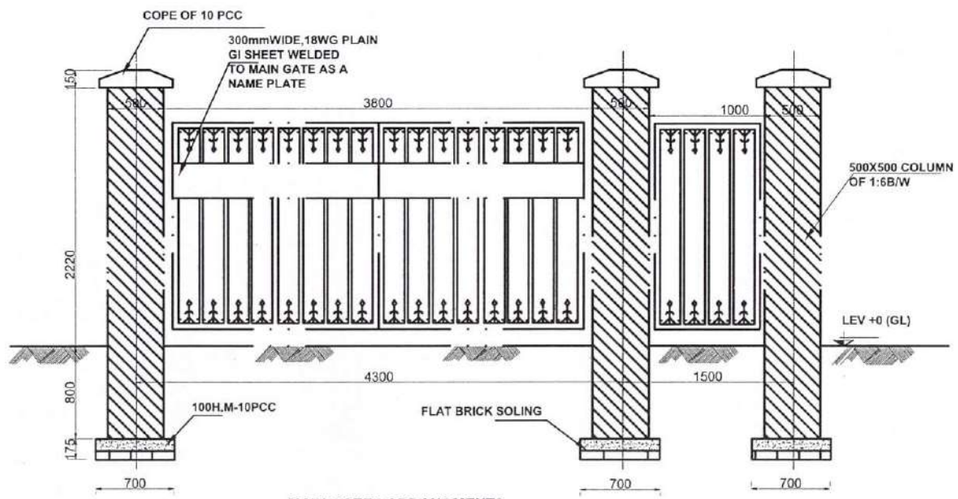

MAIN GATES ARRANGMENTS

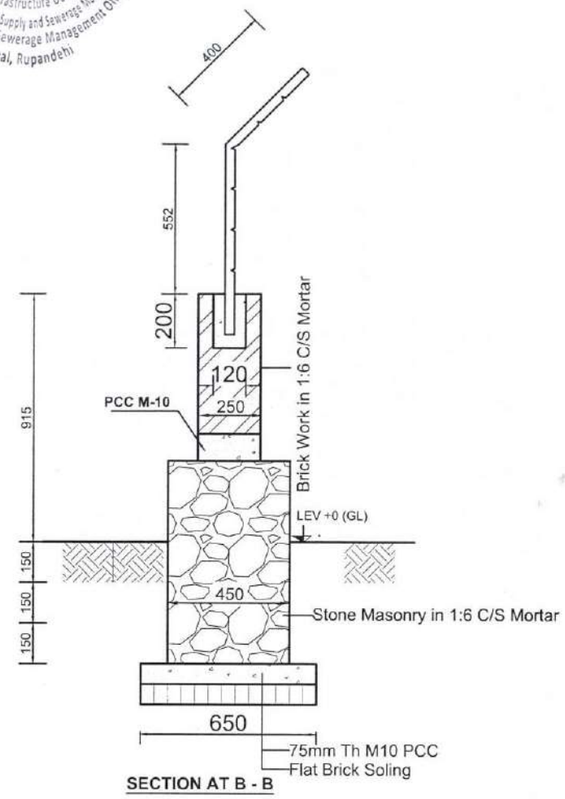

SECTION AT B - B

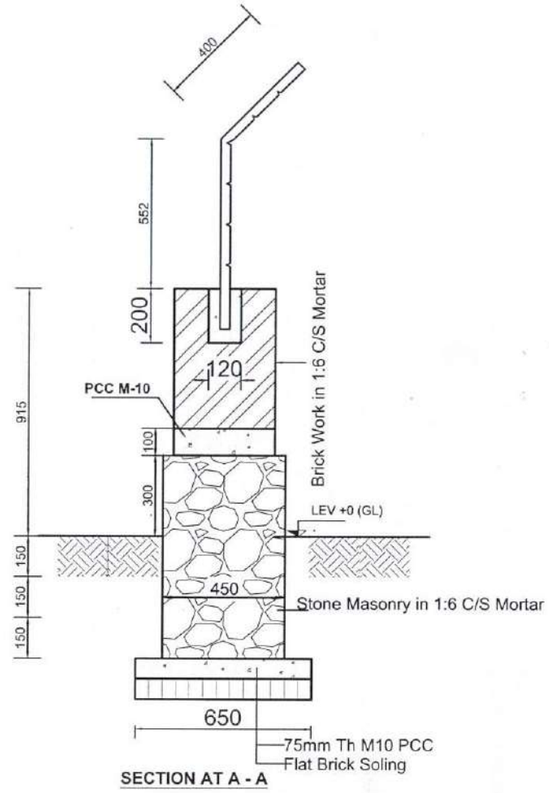

SECTION AT A - A

PLAN OF BOUNDARY WALL AT 1.0m FROM GL

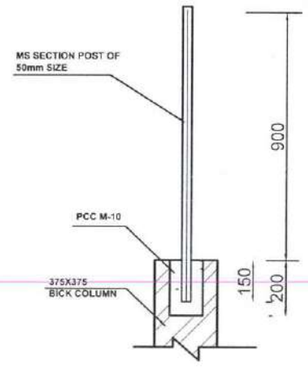

DETAIL OF MS POST

Government of Nepal
Ministry of Infrastructure Development
Department of Water Supply and Sewerage Management
Water Supply and Sewerage Management Office
Butwal, Rupandehi

Employer:	NAME OF PROJECT:	TITLE:				SCALE:	CONSULTANT:	DWG. NO:
Government of Nepal Ministry of Infrastructure Development Department of Water supply and Sewerage Management Water supply and Sewerage Management Office Butwal	Imiliya WSP	BOUNDARY WALL WITH FENCING AND ENTRANCE GATE	APPROVED BY:			Not in Scale		01

Government of Nepal
Ministry of Infrastructure Development
Department of Water Supply and Sewerage Management
Water Supply and Sewerage Management Office
Butwal, Rupandehi

Office Chief

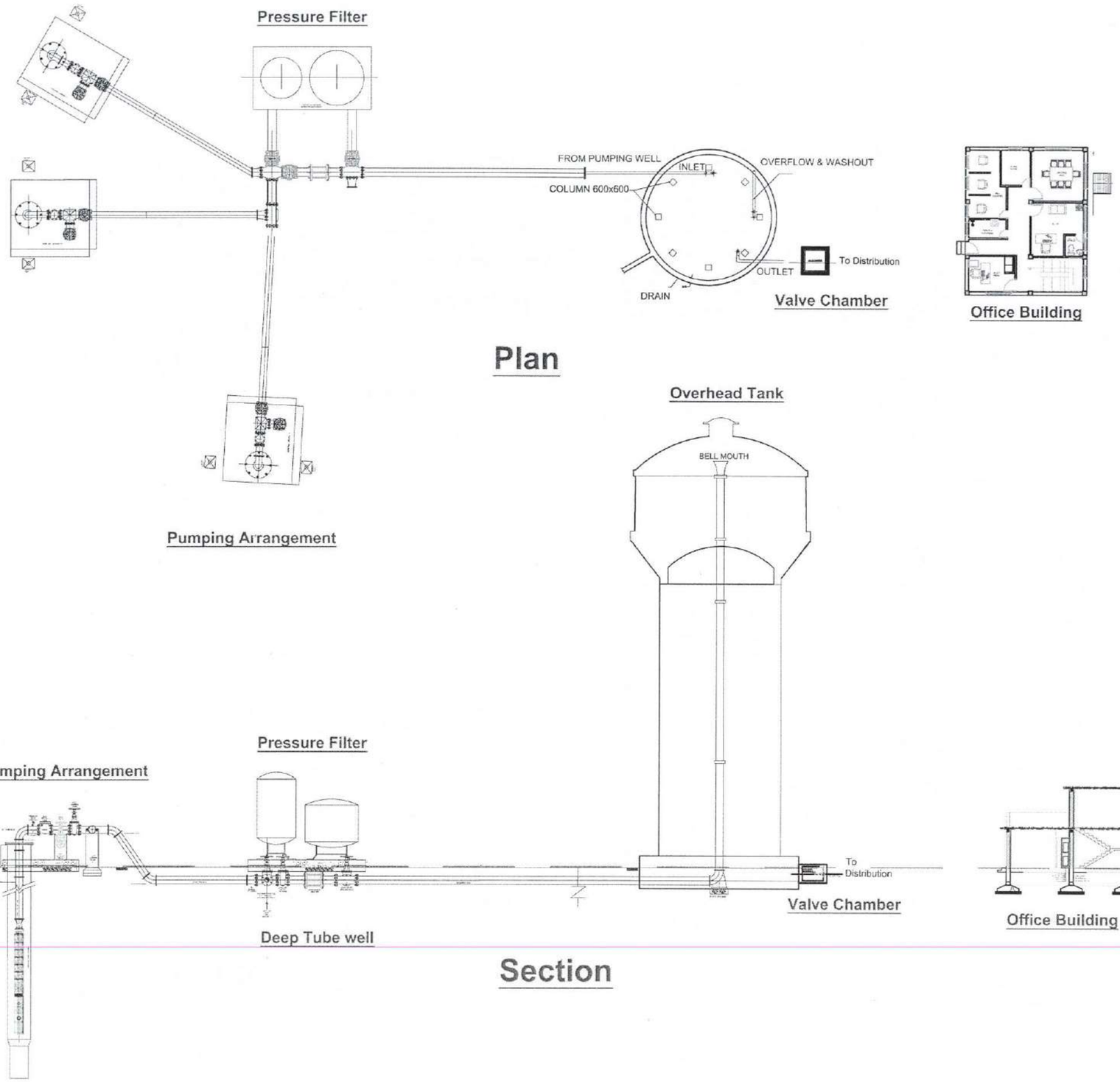

Employer :		NAME OF PROJECT :	SIGNATURE	DESIGNED BY :	SCALE :	STRUCTURE NAME :	DATE :
Ministry of Infrastructure Development Department of Water Supply and Sewerage Management Water Supply and Sewerage Management Office Butwal,Rupandehi		Imiliya Water Supply Project		DRAWN BY : CHECKED BY : APPROVED BY :		Flow Diagram	DRG NO : SHEET NO : 1

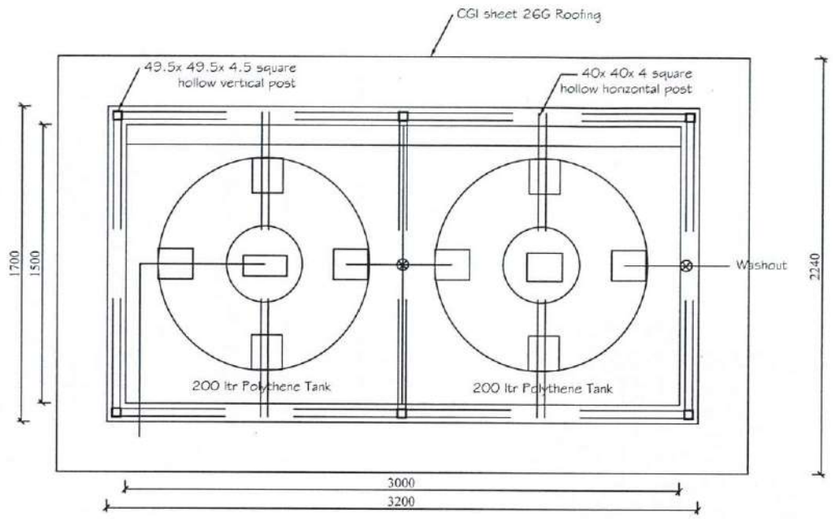

PLAN

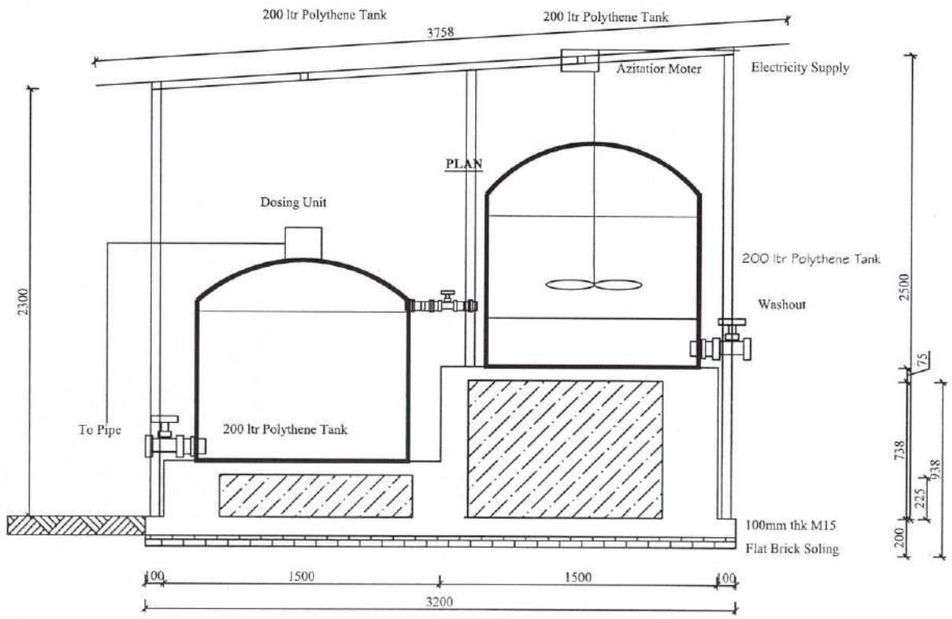

SECTION

S.N.	Description	No.	Quantity	Unit
B	Pipe and fittings Works			
B.1	Mixing Tank Unit			
1	HDPE Tank 200 lit	1	1.00	no
2	1" dia PVC Tank Nipple	2	2.00	no
3	1" dia PVC Union	1	1.00	no
4	1" dia PVC BALL Valve	1	1.00	no
5	1 1/2" dia PVC Tank Nipple	1	1.00	no
6	1 1"2 dia PVC BALL Valve	1	1.00	no
7	1" dia PVC Tank Nipple	2	2.00	no
B.2	Chemical Storage Tank Unit			
1	HDPE Tank 200 lit	1	1.00	no
2	1 1/2" dia PVC Tank Nipple	1	1.00	no
3	1 1"2 dia PVC BALL Valve	1	1.00	no
4	8mm dia Plastic Pipe	12	12.00	m
5	Chemical Metering Pump	1	1.00	set
6	Chemical Mixing Agitator	1	1.00	set
7	1" dia PVC PIPE	0.5	0.50	m
8	Vertical Submersible pump 1.5 HP	1	1.00	set

Chlorination (Dosing) Unit Accessories

Employer:	NAME OF PROJECT:	TITLE:	SURVEYED BY:			SCALE:	CONSULTANT:	DWG. NO:
Government of Nepal Ministry of Infrastructure Development Department of Water Supply and Sewerage Management Federal Water Supply and Sewerage Management Project Butwal,Rupandehi	Imiliya Water Supply Project	Chlorination Unit	DESIGNED BY: CHECKED BY: APPROVED BY:			Not to Scale		CU-1

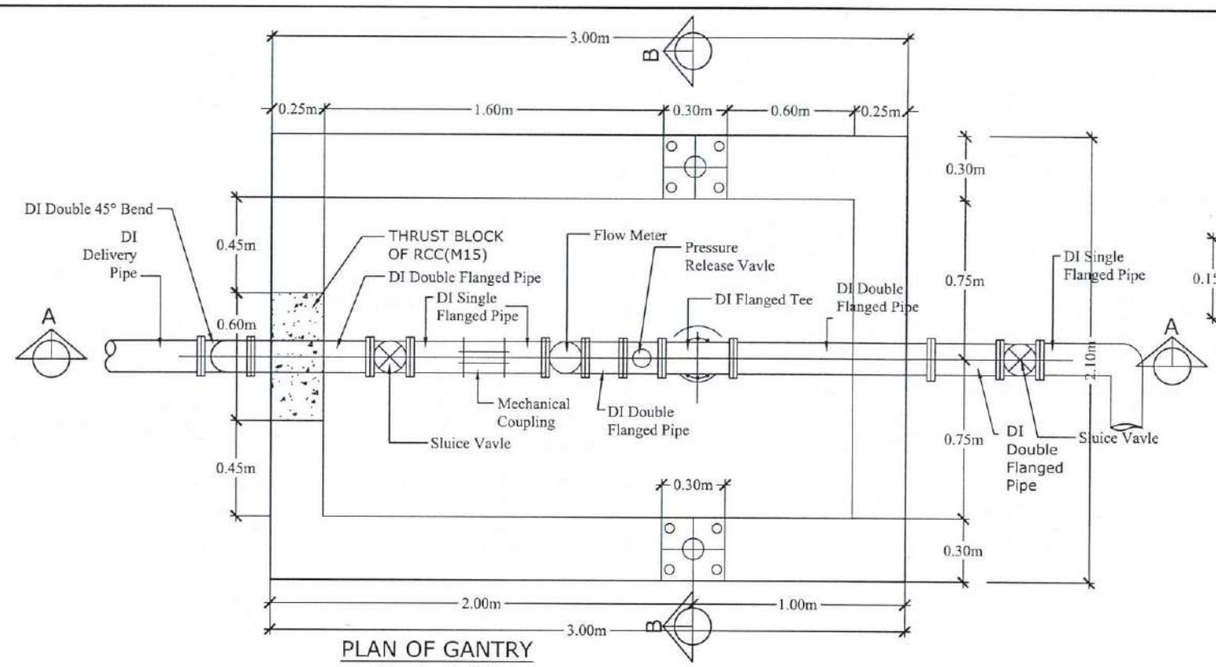

PLAN OF GANTRY
Scale 1:25

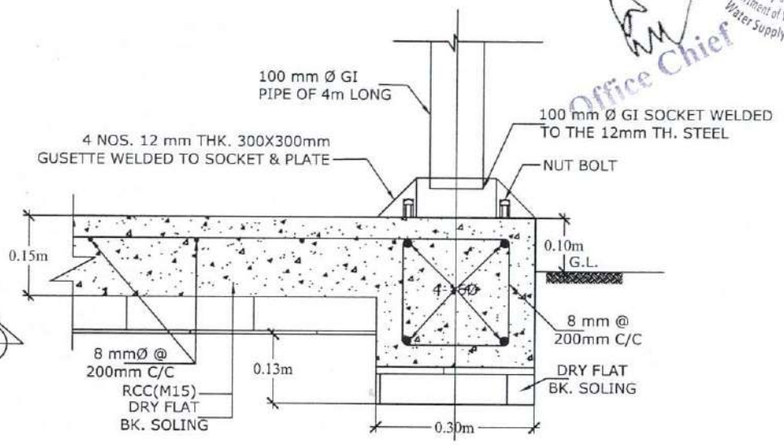

DETAILS AT C
Scale 1:10

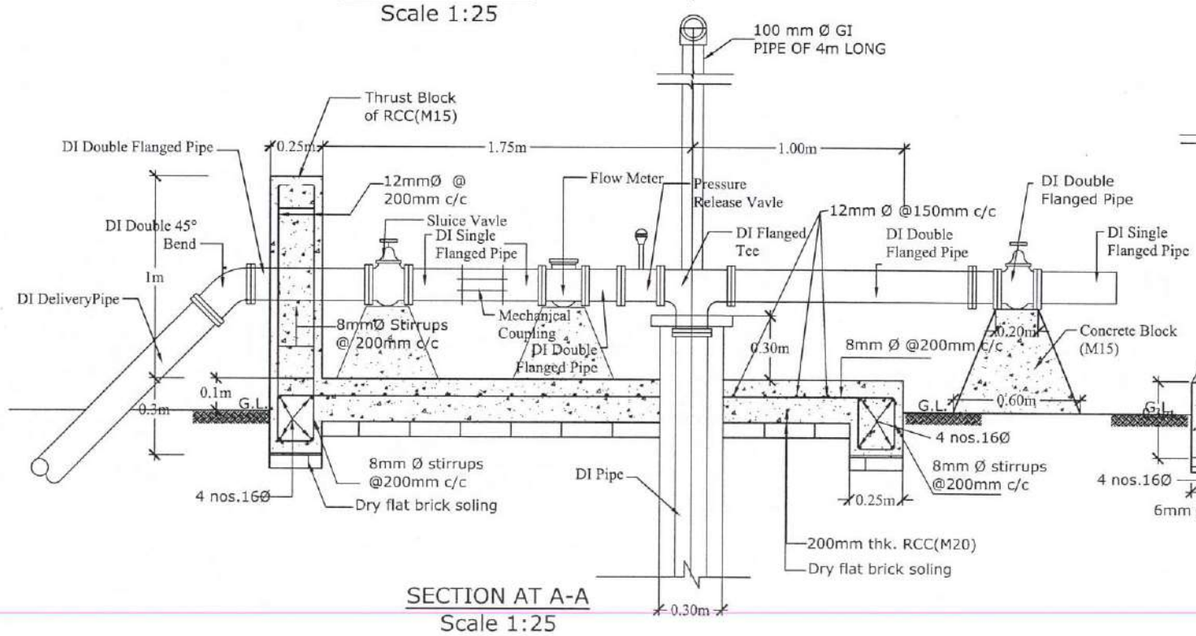

SECTION AT A-A
Scale 1:25

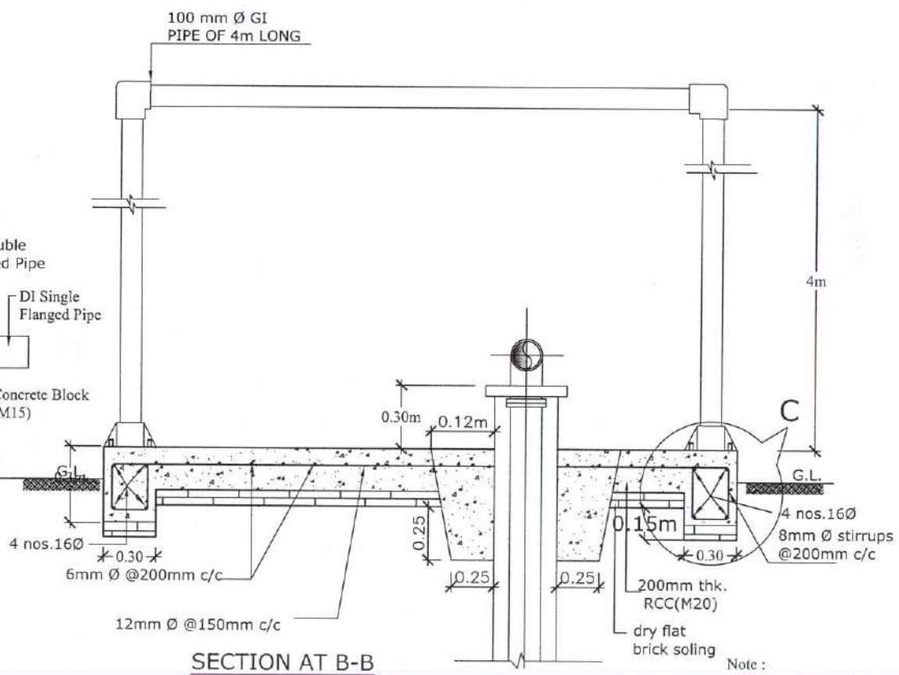

SECTION AT B-B
Scale 1:25

Note :
All Dimensions are in mm
Pipes and Fitting not to Scale

DETAIL OF BOREHOLE PLATFORM AND GANTRY

As Shown

Employer:	NAME OF PROJECT:	TITLE:	SURVEYED BY:			SCALE:	CONSULTANT:	DWG. NO:
Government of Nepal Ministry of Infrastructure Development Department of Water Supply and Sewerage Management Water Supply and Sewerage Management Office Butwal,Rupandehi	Imiliya Water Supply Project, Kapilbastu	Borehole Platform	DESIGNED BY: CHECKED BY: APPROVED BY:			Not to Scale		1

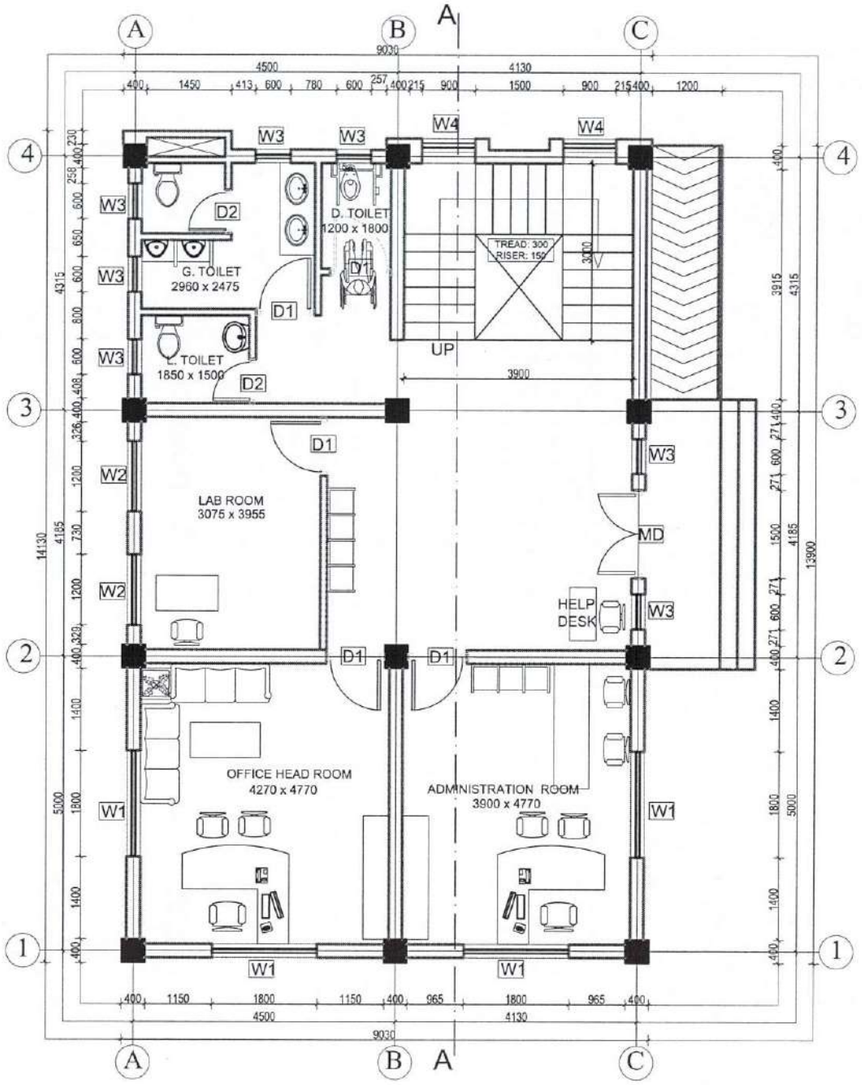

GROUND FLOOR PLAN
AREA: 122.64 sq.m

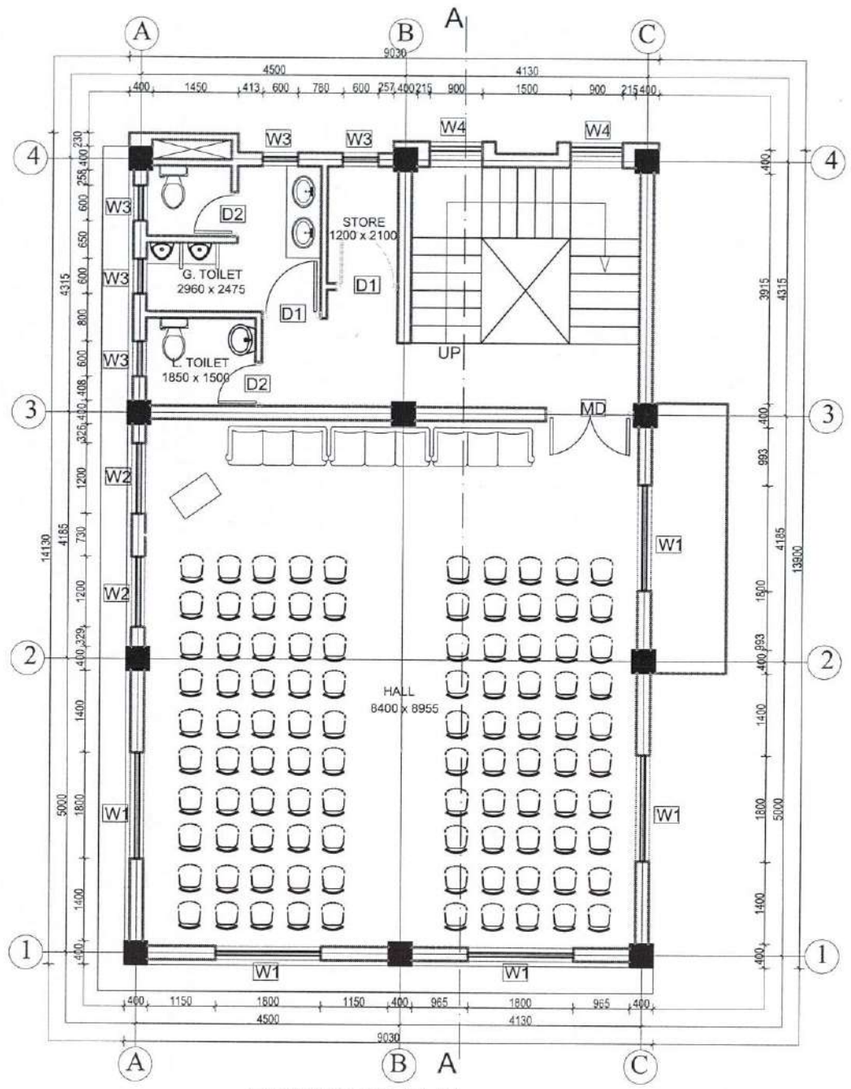

FIRST FLOOR PLAN
AREA: 122.64 sq.m

Government of Nepal
Ministry of Infrastructure Development
Department of Water Supply and Sewerage Management
Water Supply and Sewerage Management Office
Butwal, Rupandehi
Office Chief

EMPLOYER:	CONSULTANT:	PROJECT NAME :-	SHEET TITLE:-		DESIGN BY:-	SHEET NO
Government of Nepal Ministry of Infrastrcture Development Department of Water Supply and Sewerage Management Water Supply and Sewerage Management Office Butwal,Rupandehi		Imiliya Water Supply Project			DRAWN BY:- CHECKED BY:-	1
			DATE :- 2026	SCALE:-	APPROVED BY:-	

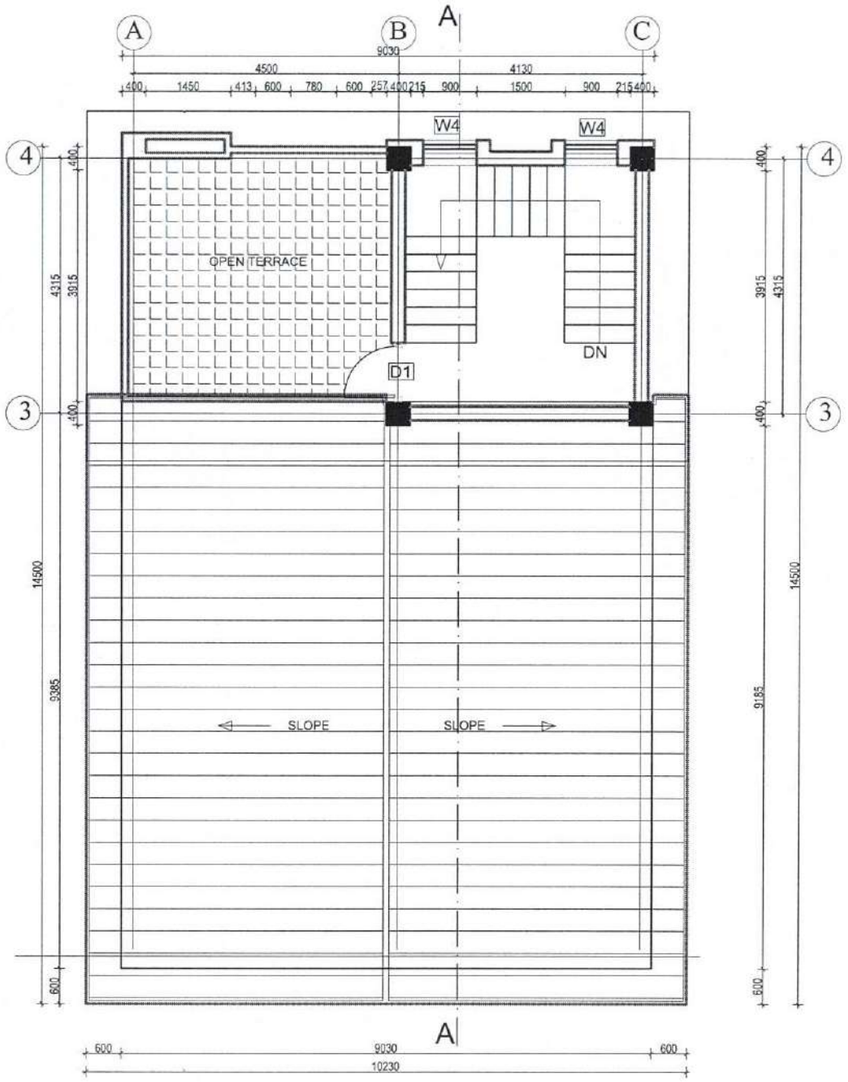

TOP FLOOR PLAN

AREA: 21.35 sq.m

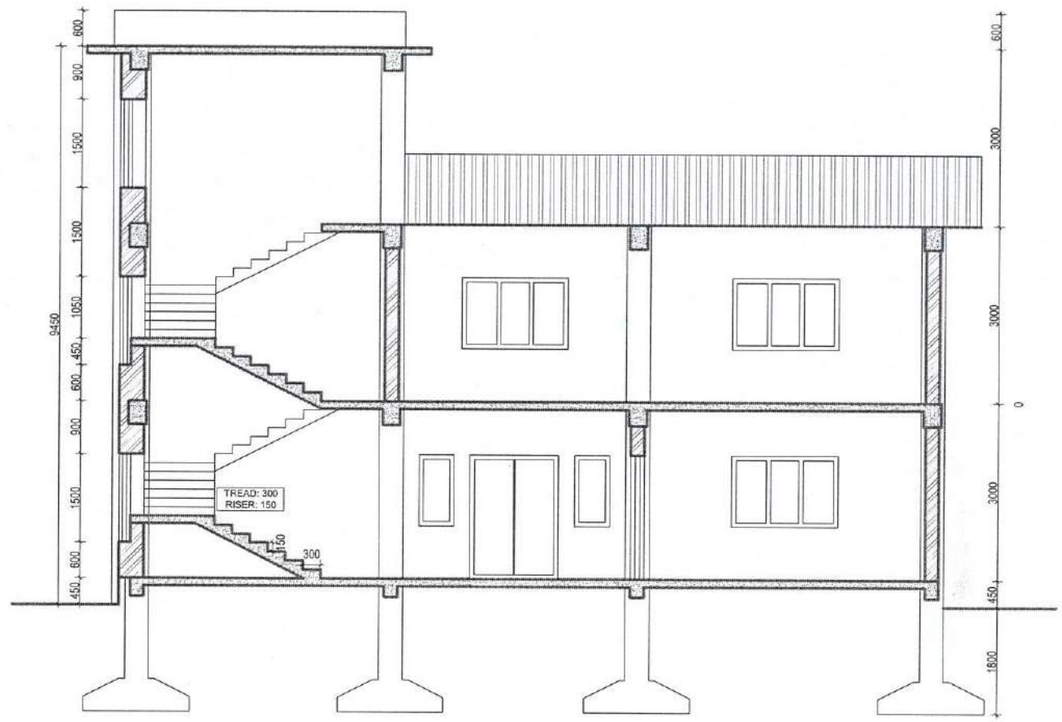

Government of Nepal
Ministry of Infrastructure Development
Department of Water Supply and Sewerage Management
Water Supply and Sewerage Management Office
Butwal, Rupandehi

Office Chief

CLIENT:	CONSULTANT:	PROJECT NAME :-	SHEET TITLE:-		DESIGN BY:-	SHEET NO
Government of Nepal Ministry of Infrastrcture Development Department of Water Supply and Sewerage Management Water Supply and Sewerage Management Office Butwal,Rupandehi	Ghanteshwor Engineering Solution Pvt Ltd ,Bhaktapur	Imiliya Water Supply Project			DRAWN BY:- CHECKED BY:-	2
			DATE :- 2026	SCALE:-	APPROVED BY:-	

Government of Nepal
Ministry of Infrastructure Development
Department of Water Supply and Sewerage Management
Water Supply and Sewerage Management Office
Butwal, Rupandehi

Office Chief

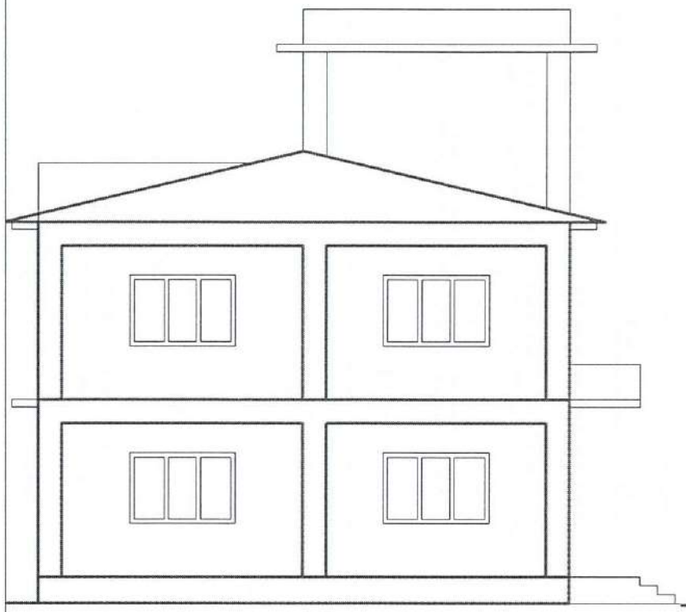

WEST ELEVATION

EAST ELEVATION

DOOR AND WINDOW SCHEDULE

S.N.	NAME	SYMBOL	SIZE(MM)
1	WINDOW	W1	1800x1500
2	WINDOW	W2	1200 x 1500
3	WINDOW	W3	600 x 1500
4	WINDOW	W4	900 x 1500
5	MAIN DOOR	MD	1500 x 2100
6	DOOR	D1	1000x 2100
7	DOOR	D2	750 x 2100

NORTH ELEVATION

SOUTH ELEVATION

CLIENT:	CONSULTANT:	PROJECT NAME :-	SHEET TITLE:-			SHEET NO
Government of Nepal Ministry of Infrastrcture Development Department of Water Supply and Sewerage Management Water Supply and Sewerage Management Office Butwal,Rupandehi	Ghanteshwor Engineering Solution Pvt Ltd ,Bhaktapur	Imiliya Water Supply Project			DESIGN BY:- DRAWN BY:- CHECKED BY:-	3
			DATE :- 2026	SCALE:-	APPROVED BY:-	

Office Chief

Supplementary Information

[insert supplementary information if any]

Personnel Requirements

Using Form PER-1 and PER-2 in Section IV (Bidding Forms), the Bidder must demonstrate it has personnel that meet the following requirements:

SN.	Position	Required No.	Academic Qualification	Total Work Experience [Years]	Experience in Similar Works [years]
1.	Project Manager	1(One)	Bachelor in Civil Engineering	3	2
2.	Civil Engineer/ Site Engineer	1(One)	Bachelor in Civil Engineering	2	1
3.	Sub-Engineer	1(One)	Diploma in Electrical/Mechanical Engineering	2	1

Equipment Requirements

Using Form EQU in Section IV (Bidding Forms), the Bidder must demonstrate it has the key equipment listed below:

No.	Equipment Type and Characteristics	Min. Number Requirement
1.	Excavator (Minimum 0.5 Cu.m. Capacity)	1(One)
2.	Concrete Mixer	1(One)

Office Chief
Government of Rwanda
Ministry of Infrastructure
Department of Water Supply and Sewerage Management
Water Supply and Sewerage Management Office
Butwal, Rupandehi

Section VII: Bill of Quantities[9]

Notes for Unit Rate Contracts:

Objectives

The objectives of the Bill of Quantities are

(a) to provide sufficient information on the quantities of Works to be performed to enable Bids to be prepared efficiently and accurately; and

(b) when a Contract has been entered into, to provide a priced Bill of Quantities for use in the periodic valuation of Works executed.

In order to attain these objectives, Works should be itemized in the Bill of Quantities in sufficient detail to distinguish between the different classes of Works, or between Works of the same nature carried out in different locations or in other circumstances which may give rise to different considerations of cost. Consistent with these requirements, the layout and content of the Bill of Quantities should be as simple and brief as possible.

Content

The Bill of Quantities should be divided generally into the following sections:

(a) Preamble;

(b) Work Items (grouped into parts);

(c) Day works Schedule;

d) Provisional Sums; and

(d) Summary.

Preamble

The Preamble should indicate the inclusiveness of the unit prices, and should state the methods of measurement which have been adopted in the preparation of the Bill of Quantities and which are to be used for the measurement of any part of the works.

Work Items

The items in the Bill of Quantities should be grouped into sections to distinguish between those parts of the Works which by nature, location, access, timing, or any other special characteristics may give rise to different methods of construction, or phasing of the Works, or considerations of cost. General items common to all parts of the works may be grouped as a separate section in the Bill of Quantities.

Day work Schedule

A Day work Schedule should be included only if the probability of unforeseen work, outside the items included in the Bill of Quantities, is high. To facilitate checking by the Employer of the realism of rates quoted by the Bidders, the Day work Schedule should normally comprise the following:

(a) A list of the various classes of labour, materials, and Constructional Plant for which basic day work rates or prices are to be inserted by the Bidder, together with a statement of the conditions under which the Contractor will be paid for work executed on a day work basis.

[9]In lump sum contracts, delete "Bill of Quantities" and replace with "Schedule of Activities" throughout this section.

(b) Nominal quantities for each item of Day work, to be priced by each Bidder at Day work rates as bid. The rate to be entered by the Bidder against each basic Day work item should include the Contractor's profit, overheads, supervision, and other charges.

Provisional Sums

Provisional Sums included and so designated in the Bill of Quantities shall be expended in whole or in part at the direction and discretion of the Project Manager in accordance with the Conditions of Contract.

Summary

The Summary should contain a tabulation of the separate parts of the Bill of Quantities carried forward, with provisional sums for Day work, for physical (quantity) contingencies, and for price contingencies (upward price adjustment) where applicable.

Preamble of Bill of Quantities

A. General

1. The Bill of Quantities shall be read in conjunction with the Instructions to Bidders, General and Special Conditions of Contract, Technical Specifications, and Drawings. The work or materials covered by items in the Bill of Quantities are as detailed in the Specifications and Drawings.
2. The quantities given in the Bill of Quantities are estimated and provisional, and are given to provide a common basis for bidding. The basis of payment will be the actual quantities of work ordered and carried out, as measured by the Contractor and verified by the Project Manager and valued at the rates and prices bid in the priced Bill of Quantities, where applicable, and otherwise at such rates and prices as the Project Manager may fix within the terms of the Contract.
3. For any item for which measurement is based on records made before or during construction the records shall be prepared and agreed between the Employer and the Contractor. Should the Contractor carry out such work without the prior agreement of the Project Manager, the Project Manager may request the Contractor to carry out investigations to confirm the extent of the work and the quantity of work certified for payment shall be solely at the Project's Manager discretion. The cost of any such investigation shall be borne by the Contractor.
4. The rates and prices tendered in the priced Bill of Quantities shall, except as otherwise provided under the Contract, include all construction equipment, labor, supervision, materials, erection, maintenance, insurance, profit, taxes, and duties, together with all general risks, liabilities, and obligations set out or implied in the Contract.
5. A rate or price shall be entered against each item in the priced Bill of Quantities, whether quantities are stated or not. The cost of items against which the Contractor has failed to enter a rate or price shall be deemed to be covered by other rates and prices entered in the Bill of Quantities. The unit price or rate entered against any item shall take precedence over any miscalculation in the total sum against that item. Where separate items have not been provided in the Bill of Quantities for work required under the Contract, then the cost of such work shall be deemed to have been included in the unit prices and rates for other items.
6. The whole cost of complying with the provisions of the Contract shall be included in the Items provided in the priced Bill of Quantities, and where no Items are provided, the cost shall be deemed to be distributed among the rates and prices entered for the related Items of Work.
7. General directions and descriptions of work and materials are not necessarily repeated or summarized in the Bill of Quantities. Where summaries of the work covered by the items are given in the preambles, they are indicative only and the rates entered shall include for all ancillary work or materials not specifically stated but implicit in the item of work. The Specification Clause references given in the parenthesis in each item of the Bills of Quantities are for the. convenience of bidders and generally refer to the principal relevant- specification clause but do not necessarily represent the whole of the specification requirements for the work required within the item. The

Office Chief

presence of a Specification clause reference shall not in any way reduce the Bidders' obligation to complete work in accordance with all the requirements of the Specification.

8. Each Provisional Sum shall only be used, in whole or in part, in accordance with the Project Manager's instructions. The total sum paid to the Contractor shall include only such amounts, for the work, supplies or services to which the Provisional Sum relates, as the Engineer shall have instructed. The provisional sum shall include the actual amounts paid (or due to be paid) by the Contractor. The Contractor shall, when required by the Engineer, produce quotations, invoices, vouchers and accounts or receipts in substantiation.
9. The method of measurement of completed work (supply, delivery and installation including testing) for payment shall be in accordance with the Specifications and any other related document forming part of the Contract Documents. Other cost not mentioned in BOQ for pipeline works as an item shall be arranged by Contractor at his own cost.
10. The Bidder must see the site condition and take account of all the aforesaid and foregoing factors while quoting the rates, as no extra will be allowed on any grounds arising out of or relating to the aforesaid and foregoing
11. Errors during bidding process will be corrected by the Employer for any arithmetic errors pursuant to Clause 33 of the Instructions to Bidders
12. The unit rates of each item shall be exclusive of Value Added Taxes (VAT). The VAT shall be added separately as prescribed in Summary of Bill of Quantities
13. Without affecting the generality of the foregoing provisions, the prices and rates entered by the Contractor in the Bill of Quantities shall include, inter alia, all cost and expenses involved with or arising from the following:

    - the provision, storage, transport, handling, use distribution and maintenance of all materials, plant, equipment, machinery and tools including all costs, charges, dues, demurrage or other outlays involved in carriage and importation;
    - the provision and maintenance of all staff and iabour and their payment, accommodation, transport fares and other requirements
    - setting out, including the location and preservation of survey markers, measurement and supervision;
    - the provision, operation, maintenance and removal upon completion of the Contract of all Contractor's Site Installation;
    - the provision, storage, transport, use, handling, distribution and maintenance of all consumable stores, fuel, water and electricity for the Contractor's Site Installation;
    - the opening, operation and reinstatement upon completion of all sources for concrete, aggregates, earthworks etc.
    - the provision and maintenance of all temporary detours, of traffic control measures and of reinstatement upon completion of the existing roads;
    - protection against failure of property adjoining the excavations for pipelines to be laid;
    - all contractual submissions by the Contractor except spare parts and photographs;
    - all quality control measures including inspections and tests;
    - damage caused to the Works under construction, Plant, materials and consumable stores by weather;
    - repairs to the Works either prior to or during the Defects Liability Period;
    - maintenance of total work from commencement day to end of defect liability period;
    - coordination with other Contractors or Authorities carrying out work either in connection with or adjacent to the Works;
    - Overheads, on-costs and profit.
14. The items described as " Supply and Installation of Fittings ..." of any kind and for any diameter of fitting and valves include all associated works such as transportation of delivered fittings and valves to the concerned Site, handling, storage, protection of flanges and other connection ends, installation of fittings and valves with necessary bolts, collars, gaskets etc. as required to make a

Government of Nepal
Ministry of Urban Development
Department of Water Supply and Sewerage Management
Office Chief
Butwal, Rupandehi

complete watertight joint to the corresponding pipe, testing, backfilling compaction and disposal of excess materials as per specification and drawings. Further requirements for the work or material in question may be stated in other Clauses in the specification or on the Drawings and the Contract Rates shall be deemed to cover also the cost of complying with any such further requirements.

15. Cost of temporary works like construction and maintenance of road diversions including traffic control; construction and maintenance of dewatering and drainage arrangements, establishment and maintenance of Contractor's site office, store, establishment and maintenance of workshops, plant and equipment, including Project sign boards etc if unless and otherwise mentioned in BOQ, will be deemed part of priced work and shall not be paid extra.
16. The cost of providing insurance of Works and Materials and Plants, the Contractor's Equipment, Third Party Insurance (Including Employer's Property), personal injury or death Contractor's workmen and other people shall be paid to the Contractor as provisional sum amount against submission of required insurance policies with the appropriate payment receipts, in the form acceptable to the Employer. The Contractor shall extend the validity period of all kinds of insurances until the completion of the project including extension of time given, if any, plus defect liability period.
17. The Contractor shall prepare and maintain the quality control plan and procedures, sampling, material / plant certificates, maintaining of site records and daily log books and testing facilities and laboratories including materials, manpower and equipment needed for all testing required to ensure quality of work, and all other requirements shall be as per relevant clauses of Technical Specifications. Unless otherwise mentioned in BOQ, no separate measurements and/or payment shall be made for the works required under this Clause. All the cost associated with this Clause is deemed to be included in the item rates of the Bill of Quantities. The personnel requirements submitted is deemed to be part of BOQ item and shall present for Quality control. To test the RCC Reservoir's water tightness, water shall be filled 1/3 rd of the total capacity and retained for three days.
18. Payment against pipes and valves, specials etc. intended to form part of permanent works shall be made to the contractor as per following provision:
19. Payments of supply, Laying & Jointing of pipe, fittings and appurtenances (all types), shall be provided in three installments. In the first installment, seventy percent (70%) of the tendered rate item of supply Laying & Jointing of pipe, fittings and appurtenances (all types) the supply, delivery, testing, acceptance and final inspection at the stockpiling site. The second installment, Twenty percent (20%) of payments of such items, shall be after the completion of pipe laying and jointing work and remaining ten percent (10 %) will be paid after testing commissioning of the project.
20. As built drawing shall be provided within 60 days after completion along with the starting of Testing and Commissioning Period as provided in the SCC.
21. Unless otherwise mentioned in BOQ, no separate measurements and/or payment shall be made for works as per instruction of the Project manager using disinfectants required under disinfection of treatment plant, reservoir tanks and pipe line. All the cost associated with this provision is deemed to be included in the item rates of the Bill of Quantities.
22. Any Surplus pipe quantities after the completion of works and deemed necessary for future use by the Water Users Committee (WUC) and the Project Manager shall be paid for at a rate lower by 6 percent for PE pipes, lower by 2.2 percent for DI pipes and lower by 8.5 percent for GI pipes of the supply, laying and jointing rates of those respective pipe types quoted in the BOQ.
23. Similarly, any surplus pipe fitting I valves and meter quantities after the completion of works and deemed necessary for future use by the Water Users Committee (WUC) and the Project manager. shall be paid for a rate lower by 9 percent of DI / CI fittings, lower by 3 percent for GI fittings, lower by 5 percent for PE fittings and lower by 2.5 percent for valves and meters of supply, laying and installation rates of those respective fittings / valves and meter types quoted in the BOQ.

Office Chief

B. Day work Schedule

a) General

1. Work shall not be executed on a day work basis except by written order of the Project Manager. Bidders shall enter basic rates for day work items in the Schedules. These rates shall apply to any quantity of day work ordered by the Project Manager. Nominal quantities have been indicated against each item of day work. The payments for day work shall not be subject to price adjustment.

b) Day work Labor

1. In calculating payments due to the Contractor for the execution of day works, the hours for labor will be reckoned from the time of arrival of the labor at the job site to execute the particular item of day work to the time of departure from the job site, but excluding meal breaks and rest periods. Only the time of classes of labor directly doing work ordered by the Project Manager and are competent to perform such work will be measured. The time of gangers (charge hands) actually doing work with the gangs will also be measured but not the time of foremen or other supervisory personnel.

2. The Contractor shall be entitled to payment in respect of the total time that labor is employed on day work, calculated at the basis rates entered by it in the " SCHEDULE OF DAY WORK RATES: 1. LABOR". The rates for labor shall be deemed to cover all costs to the Contractor including (but not limited to)

   i) the amount of wages paid to such labor, transportation time, overtime, subsistence allowances,
   ii) any sums paid to or on behalf of such labor for social benefits in accordance with Nepal law,
   iii) Contractor's profit, overheads, superintendence, liabilities and insurance and
   iv) charges incidental to the foregoing.

c) Day work Equipment

1. The Contractor shall be entitled to payments in respect of Constructional Plant already on site and employed on day work at the basis rental rates entered by him in the "SCHEDULE OF DAY WORK RATES:2 EQUIPMENT". The said rates shall be deemed to include due and complete allowance for depreciation, interest, indemnity and insurance, repairs, maintenance, supplies, fuel, lubricant, and other consumables and all overhead, profit and administrative costs related to the use of such equipment. The cost of drivers, operators and assistants also shall be included in the rate of the equipment and no separately payment shall be made for it.

2. In calculating the payment due to the Contractor for Constructional Plant employed on day work, only the actual number of working hours will be eligible for payment, except that where applicable and agreed with the Project Manager, the travelling time from the part of the Site where the Construction Plant was located when ordered by the Project Manager to be employed on day work and the time for return journey there to shall be included for payment.

d)Day work Materials

1. The Contractor shall be entitled to payment in respect of materials used for day work (except for materials for which the cost is included in the percentage addition to labor costs as detailed heretofore), at the rates entered by him in the "SCHEDULE OF DAY WORK RATES: 3 MATERIALS" and shall be deemed to include overhead charges an

   d profit as follows;

   (i) the rates for materials shall be calculated on the basis of the invoiced price, freight, insurance, handling expenses, damage, losses, etc. and shall provide for delivery to store for stockpiling at the Site.

   (ii) the cost of hauling materials for use on work ordered to be carried out as day work, from the store or stockpile on the Site to the place where it is to be used also shall be include in the same rate.

Office Chief
Water Supply and Sewerage Management Office
Butwal, Rupandehi

Provisional Sums

The estimated cost of specialized work to be carried out, or of special goods to be supplied, by other contractors should be indicated in the relevant part of the Bill of Quantities as a particular provisional sum with an appropriate brief description. A separate procurement procedure is normally carried out by the Employer to select such specialized contractors. To provide an element of competition among the Bidders in respect of any facilities, amenities, attendance, etc., to be provided by the successful Bidder as prime Contractor for the use and convenience of the specialist contractors, each related provisional sum should be followed by an item in the Bill of Quantities inviting the Bidder to quote a sum for such amenities, facilities, attendance, etc.

Bill of Quantities

Office Chief

[Insert Bill of Quantities]

Government of Nepal

Ministry of Infrastructure Development

Department of water Supply and Sewerage Management

Water Supply and Sewerage Management Office,
Butwal, Rupandehi

Procurement of

Construction of Entire Works of Imiliya Water Supply Project, Buddhabhumi-09, Kapilvastu

Issued on: 28th September, 2026
Issued to: All Eligible Bidders
Invitation for Bids No.: BTL/01/083-84
Contract Identification No.: 02/083-84/NCB/Works/C/WSSMOBTL

Bill of Quantities

(Part of Bid Documents)

Government of Nepal
Ministry of Water Supply
Department of Water Supply and Sewerage Management
Water Supply and Sewerage Management Office
Butwal

Office Chief

Government of Nepal
Ministry of Infrastructure Development
Department of Water Supply and Sewerage Management
Water Supply and Sewerage Management Office
Butwal, Rupandehi

Name of Project: Construction of Entire Works of Imiliya Water Supply Project, Buddhabhumi-09, Kapilvastu
Contract ID: 02/083-84/NCB/Works/C/WSSMOBTL

Priced Bill of Quantities

S.N.	Description of Works	Unit	Quantity	Rate (NRs.)		Amount	Remarks
				In Figures	In Words		
1	Insurances for the loss of damage to works, plant, material, equipment, property and personal injury or death and as stipulated in contract Data	P.S.	1.00	1000000.00	Ten Lakhs only	1000000.00	
2	Utility Diversion (other than water supply system),i.e. Utility relocation and existing control valves, reinstallation etc. and Provide for all necessary cost of Protection from damage of existing structure adjacent works as instructed and approved by the Engineer.	P.S.	1.00	500000.00	Five Lakhs only	500000.00	
3	Cost for complying with any other requirement(Study or Construction) not covered in BOQ, General or Special Conditions of contract which may have a financial implication and necessary to complete the work as instructed and approved by the Engineer.	P.S.	1.00	2000000.00	Twenty Lakhs only	2000000.00	
4	Provide to execute all necessary Environmental Mitigation Measures during the entire construction period as per the instruction and approval of the Engineer and as recommended in the Report.	P.S.	1.00	600000.00	Six Lakhs only	600000.00	
5	Reinstatement of existing civil structures duiring the project construction period s per the instruction and approval of the Engineer	P.S.	1.00	1000000.00	Ten Lakhs only	1000000.00	
6	As built drawing : Preparation and submission of "As built" drawing of all assets created including, but not limited to, pipeline network, pipeline appurtenances, valve chambers, civil structures in a format prescribed as per the Work's Requirement. The format should suitable for transferring to GIS and CAD database of pipeline of transmission, bulk distribution network, treatment plant location, reservoir location, and all related structures at the completion of each section / component of the work. Sheet Size: A1 / A2 / A3 (as appropriate) (3 hard copies and one soft copy)	Job	1.00				

Government of Nepal
Ministry of Water Supply
Department of Water Supply and Sewerage Management
Water Supply and Sewerage Management Office
Butwal

Government of Nepal
Ministry of Infrastructure Development
Department of Water Supply and Sewerage Management
Water Supply and Sewerage Management Office
Butwal, Rupandehi

Office Chief

Name of Project: Construction of Entire Works of Imiliya Water Supply Project, Buddhabhumi-09, Kapilvastu
Contract ID: 02/083-84/NCB/Works/C/WSSMOBTL

Priced Bill of Quantities

S.N.	Description of Works	Unit	Quantity	Rate (NRs.)		Amount	Remarks
				In Figures	In Words		
7	Provision of joint survey for the location of reservoirs, pipelengths, junctions and other necessary civil structures for the project with their accessibilitycomplete work in all respects as per the approved drawings, technical specifications, and as dire	Job	1.00				
8	Provide and maintain cube testing facilities including moulds for the duration of the contract and preparation and testing of cubes, marking, curing, storing and transporting to the registered laboratories or government authorized laboratories for tests and maintaining full records (Equipment and moulds to remain in the contractor's property), Paid as number of cubes for all complete work to maintain the quality of works as instructed and approved by the engineer.	Nos.	200.00				
9	Provide photographs (Digital CD) and colour prints, sized A4, 24 nos., each month for inclusion in periodic progress report to the satisfaction of the engineer. (6 sheet A4 size color Photo Paper per months)	Months	12.00				
10	Testing and Commencing of entire system as specified in the Conditions of Contract for at least 7 days.	L.S.	1.00				
11	Provide survey equipment's of types and numbers as specified, for the Engineer's requirement, maintenance of them, including services of adequate number of survey assistants and Laboure's for all the sites for the period of the Contract as complete work i	Months	24.00				
12	Provide safety equipment for the Engineer at each of the site offices of the types and number specified for the period of the Contract as per Specification.	Months	24.00				
13	Removal of top soil and stacking at the location as specified by the Engineer all complete	Sq.m.	351.03				

Government of Nepal
Ministry of Water Supply
Department of Water Supply and Sewerage Management
Water Supply and Sewerage Management Office
Butwal

Name of Project: Construction of Entire Works of Imiliya Water Supply Project, Buddhabhumi-09, Kapilvastu
Contract ID: 02/083-84/NCB/Works/C/WSSMOBTL

Office Chief

Government of Nepal
Ministry of Infrastructure Development
Department of Water Supply and Sewerage Management
Water Supply and Sewerage Management Office
Butwal, Rupandehi

Priced Bill of Quantities

S.N.	Description of Works	Unit	Quantity	Rate (NRs.)		Amount	Remarks
				In Figures	In Words		
14	Earthwork in excavation of foundation of structures including construction of shoring and bracing, removal of stumps and other deleterious matter and backfilling with approved materials all complete work in all respects as per the approved drawings, technical specifications, and as directed by the Engineer.	Cu.m.	29851.49				
15	Providing, filling and compacting Mud with water sprinkling in earthen floorall complete work in all respects as per the approved drawings, technical specifications, and as directed by the Engineer.	Cu.m.	555.00				
16	Filling sand brought from outside in 150mm layers under floors foundation etc. including watering, ramming, dressing, etc. Il complete work in all respects as per the approved drawings, technical specifications, and as directed by the Engineer.	Cu.m.	3.76				
17	Providing and laying dry stone soling with sand in foundation in true line and level including watering and ramming all complete work in all respects as per the approved drawings, technical specifications, and as directed by the Engineer.	Cu.m.	91.50				
18	Supplying, mixing, placing, compacting & the different mixes of Concrete work M10 for PCC work in Foundation of Structure as per shape and size as shown in drawings including supply of all materials and curing omplete work in all respects as per the approved drawings, technical specifications, and as directed by the Engineer.	Cu.m.	76.60				
19	Supplying, mixing, placing, compacting & the different mixes of Concrete work M15 for PCC work in Foundation of structure as per shape and size as shown in drawings including supply of all materials and curing omplete work in all respects as per the approved drawings, technical specifications, and as directed by the Engineer.	Cu.m.	155.41				

Government of Nepal
Ministry of Water Supply
Department of Water Supply and Sewerage Management
Water Supply and Sewerage Management Office
Butwal

Name of Project: Construction of Entire Works of Imiliya Water Supply Project, Buddhabhumi-09, Kapilvastu
Contract ID: 02/083-84/NCB/Works/C/WSSMOBTL

Office Chief

Government of Nepal
Ministry of Infrastructure Development
Department of Water Supply and Sewerage Management
Water Supply and Sewerage Management Office
Butwal, Rupandehi

Priced Bill of Quantities

S.N.	Description of Works	Unit	Quantity	Rate (NRs.)		Amount	Remarks
				In Figures	In Words		
20	Supplying, mixing, placing, compacting & the different mixes of Concrete work M20 for RCC work in super structure and sub structure/foundation as per shape and size as shown in drawings including supply of all materials and curing omplete work in all respects as per the approved drawings, technical specifications, and as directed by the Engineer.	Cu.m.	336.92				
21	Supplying, mixing, placing, compacting & the different mixes of Concrete work M20 for PCC work in pipeline crossing as per shape and size as shown in drawings including supply of all materials and curingomplete work in all respects as per the approved drawings, technical specifications, and as directed by the Engineer.	Cu.m.	240.00				
22	Supplying, mixing, placing, compacting & the different mixes of Concrete work M25 for RCC work in Super structure as per shape and size as shown in drawings including supply of all materials and curing aomplete work in all respects as per the approved drawings, technical specifications, and as directed by the Engineer.	Cu.m.	133.06				
23	Supply of materials and fabricating complete Reinforcement Steel Works (Fe 500) for any RCC works as per the drawing, specification and directed by the Engineer including cutting, bending, placing in position and binding by Binding wire, including all lap lengths/ wastage, etc. with all lead and lift all complete work in all respects as per the approved drawings, technical specifications, and as directed by the Engineer	Kg	62431.44				

Government of Nepal
Ministry of Water Supply
Department of Water Supply and Sewerage Management
Water Supply and Sewerage Management Office
Butwal

Name of Project: Construction of Entire Works of Imiliya Water Supply Project, Buddhabhumi-09, Kapilvastu
Contract ID: 02/083-84/NCB/Works/C/WSSMOBTL

Government of Nepal Ministry of Infrastructure Development Department of Water Supply and Sewerage Management Water Supply and Sewerage Management Office Butwal, Rupandehi

Office Chief

Priced Bill of Quantities

S.N.	Description of Works	Unit	Quantity	Rate (NRs.)		Amount	Remarks
				In Figures	In Words		
24	Providing, placing, fixing centering and shuttering for plywood or steel formwork for slabs, walls, columns and beams with necessary provision of extenstion of reinforcement for well ties) and other RCC works including nails, propping supports and bracings of steel pipes including lead & lift upto 3m height & removal and disposal of the same all, assume considering 6 times use of formwork) all complete work in all respects as per the approved drawings, technical specifications, and as directed by the Engineer	Sq.m.	1920.43				
25	Providing, placing, fixing centering and shuttering for plywood or steel formwork for slabs, walls, columns and beams with necessary provision of extenstion of reinforcement for well ties) and other RCC works including nails, propping supports and bracings of steel pipes including lead & lift above 3 to 6m height & removal and disposal of the same all, assume considering 6 times use of formwork) a all complete work in all respects as per the approved drawings, technical specifications, and as directed by the Engineer	Sq.m.	208.36				
26	Providing, placing, fixing centering and shuttering for plywood or steel formwork for slabs, walls, columns and beams with necessary provision of extenstion of reinforcement for well ties) and other RCC works including nails, propping supports and bracings of steel pipes including lead & lift above 6 to 9m height & removal and disposal of the same all, assume considering 6 times use of formwork) all complete work in all respects as per the approved drawings, technical specifications, and as directed by the Engineer	Sq.m.	94.69				

Government of Nepal
Ministry of Water Supply
Department of Water Supply and Sewerage Management
Water Supply and Sewerage Management Office
Butwal

Name of Project: Construction of Entire Works of Imiliya Water Supply Project, Buddhabhumi-09, Kapilvastu
Contract ID: 02/083-84/NCB/Works/C/WSSMOBTL

Government of Nepal Ministry of Infrastructure Development Department of Water Supply and Sewerage Management Water Supply and Sewerage Management Office Butwal, Rupandehi

Office Chief

Priced Bill of Quantities

S.N.	Description of Works	Unit	Quantity	Rate (NRs.)		Amount	Remarks
				In Figures	In Words		
27	Providing, placing, fixing centering and shuttering for plywood or steel formwork for slabs, walls, columns and beams with necessary provision of extenstion of reinforcement for well ties) and other RCC works including nails, propping supports and bracings of steel pipes including lead & lift above 9 to 12m height & removal and disposal of the same all, assume considering 6 times use of formwork) all complete work in all respects as per the approved drawings, technical specifications, and as directed by the Engineer	Sq.m.	94.69				
28	Providing, placing, fixing centering and shuttering for plywood or steel formwork for slabs, walls, columns and beams with necessary provision of extenstion of reinforcement for well ties) and other RCC works including nails, propping supports and bracings of steel pipes including lead & lift above 12 to 16m height & removal and disposal of the same all, assume considering 6 times use of formwork) all complete work in all respects as per the approved drawings, technical specifications, and as directed by the Engineer	Sq.m.	94.69				
29	Providing, placing, fixing centering and shuttering for plywood or steel formwork for slabs, walls, columns and beams with necessary provision of extenstion of reinforcement for well ties) and other RCC works including nails, propping supports and bracings of steel pipes including lead & lift above 16 to 20m height & removal and disposal of the same all, assume considering 6 times use of formwork) all complete work in all respects as per the approved drawings, technical specifications, and as directed by the Engineer	Sq.m.	99.39				

Government of Nepal
Ministry of Water Supply
Department of Water Supply and Sewerage Management
Water Supply and Sewerage Management Office
Butwal

Government of Nepal
Ministry of Infrastructure Development
Department of Water Supply and Sewerage Management
Water Supply and Sewerage Management Office
Butwal, Rupandehi

Office Chief

Name of Project: Construction of Entire Works of Imiliya Water Supply Project, Buddhabhumi-09, Kapilvastu
Contract ID: 02/083-84/NCB/Works/C/WSSMOBTL

Priced Bill of Quantities

S.N.	Description of Works	Unit	Quantity	Rate (NRs.)		Amount	Remarks
				In Figures	In Words		
30	Providing, placing, fixing centering and shuttering for plywood or steel formwork for slabs, walls, columns and beams with necessary provision of extenstion of reinforcement for well ties) and other RCC works including nails, propping supports and bracings of steel pipes including lead & lift above 20 to 24m height & removal and disposal of the same all, assume considering 6 times use of formwork) a all complete work in all respects as per the approved drawings, technical specifications, and as directed by the Engineer	Sq.m.	887.03				
31	Providing and laying Brick masonry work in superstructure/ sub-structure complete excluding pointing and plastering, as per drawing and Technical Specifications with 1:4 cement sand mortar including lead upto 30 m curing, cleaning & racking out mortar joint and making ducts, recesses where required all complete work in all respects as per the approved drawings, technical specifications, and as directed by the Engineer	Cu.m.	232.62				
32	Providing and laying of Random Rubble stone masonry works in 1:4 cement sand mortar in foundation all complete work in all respects as per the approved drawings, technical specifications, and as directed by the Engineer	Cu.m.	41.63				
33	Flat brick soiling in foundation and floors with First class bricks in true line & level including watering and ramming all complete work in all respects as per the approved drawings, technical specifications, and as directed by the Engineer	Sq.m.	593.85				
34	Providing & fixing in position well seasoned & dressed Sal Timber for Doors, Windows & Ventilators chowkhat frame fixed with 6 nos. 300 x 20 x 6mm long MS Holdfast fixed with screw excluding the cost of 1:2:4 (300 x 100 x 100mm) concrete block all complete work in all respects as per the approved drawings, technical specifications, and as directed by the Engineer	Cu.m.	1.13				

Government of Nepal
Ministry of Water Supply
Department of Water Supply and Sewerage Management
Water Supply and Sewerage Management Office
Butwal

Government of Nepal
Ministry of Infrastructure Development
Department of Water Supply and Sewerage Management
Water Supply and Sewerage Management Office
Butwal, Rupandehi

Office Chief

Name of Project: Construction of Entire Works of Imiliya Water Supply Project, Buddhabhumi-09, Kapilvastu
Contract ID: 02/083-84/NCB/Works/C/WSSMOBTL

Priced Bill of Quantities

S.N.	Description of Works	Unit	Quantity	Rate (NRs.)		Amount	Remarks
				In Figures	In Words		
35	Providing & fixing 38mm thick Solid Core Door shutters (both side teak ply (PF/BST) waterproffing 38 x 12mm thick sal timber leaping arrangement) fixed in position with 4 nos. 100mm long brass Hinges to each shutters including the cost of 300mm & 150mm brass long tower bolts with Mortice Lock all complete work in all respects as per the approved drawings, technical specifications, and as directed by the Engineer	Sq.m.	11.54				
36	Providing & Fixing in position well Seasoned Dressed Sal Timber fully glazed Windows shutters with 75 x 38 mm section frame including the cost of 4 mm thick glass, wooden beads, nails, glass putty, heavy quality 2 Nos.75 mm long MS Butt Hinges, 2 Nos.150 mm long tower bolts, 2 Nos. 100 mm handle (heavy quality aluminium) 150 mm hooks & eyes with screw etc. to each shutter all complete work in all respects as per the approved drawings, technical specifications, and as directed by the Engineer	Sq.m.	30.56				
37	Supplying and fitting 2 or 3 panel aluminium sliding window (87*56*1.50 mm) with top fix glass with 5mm clear glass without mosquito net, all complete work in all respects as per the approved drawings, technical specifications, and as directed by the Engineer	Sq.m.	48.60				
38	Supplying and Fabricating 20x4.4 mm thick mild steel flat 12 * 12 mm solid rod grill, truss, MS angle Section fixed in position with one coat of red oxide paint to metal surface all complete work in all respects as per the approved drawings, technical specifications, and as directed by the Engineer	Kg	2217.91				
39	Supplying and Fabricating mild steel, MS angle Section fixed in position aall complete work in all respects as per the approved drawings, technical specifications, and as directed by the Engineer	Kg	864.63				

Government of Nepal
Ministry of Water Supply
Department of Water Supply and Sewerage Management
Water Supply and Sewerage Management Office
Butwal

Name of Project: Construction of Entire Works of Imiliya Water Supply Project, Buddhabhumi-09, Kapilvastu
Contract ID: 02/083-84/NCB/Works/C/WSSMOBTL

Office Chief

Government of Nepal
Ministry of Infrastructure Development
Department of Water Supply and Sewerage Management
Water Supply and Sewerage Management Office
Butwal, Rupandehi

Priced Bill of Quantities

S.N.	Description of Works	Unit	Quantity	Rate (NRs.)		Amount	Remarks
				In Figures	In Words		
40	Supplying, fabricating & erecting of tubular pipe, purlins, rafter, etc. fixed on roof including the cost of gussett plate, bolt, nuts, welding, cutting, etc. with one coat of primer all complete work in all respects as per the approved drawings, technical specifications, and as directed by the Engineer	Kg	2922.41				
41	Providing and applying 2mm thick plane wall putting of approved quality to the surfaces of wall and ceiling including scraping,surface preparation, scaffolding etc all complete work in all respects as per the approved drawings, technical specifications, and as directed by the Engineer	Sq.m.	1046.68				
42	Providing and fixing Porcelain glazed /non glazed tile in required line, level with specified thickness approved brand in any colours, shades of any size with 1:4 cement sand mortar base all complete work in all respects as per the approved drawings, technical specifications, and as directed by the Engineer	Sq.m.	167.47				
43	Providing and laying of 16 mm thick marble of required size of approved shade, colour and texure inlcluding required mortar base with rubbing and polishing all complete work in all respects as per the approved drawings, technical specifications, and as directed by the Engineer	Sq.m.	37.41			-	
44	Providing, mixing, laying cement sand punning with 1:1 cement sand mortar on floors in true line & level including curing as per drawing, specification and instructions all complete work in all respects as per the approved drawings, technical specifications, and as directed by the Engineer	Sq.m.	752.81				

Government of Nepal
Ministry of Water Supply
Department of Water Supply and Sewerage Management
Water Supply and Sewerage Management Office
Butwal

Name of Project: Construction of Entire Works of Imiliya Water Supply Project, Buddhabhumi-09, Kapilvastu
Contract ID: 02/083-84/NCB/Works/C/WSSMOBTL

Office Chief

Government of Nepal
Ministry of Infrastructure Development
Department of Water Supply and Sewerage Management
Water Supply and Sewerage Management Office
Butwal, Rupandehi

Priced Bill of Quantities

S.N.	Description of Works	Unit	Quantity	Rate (NRs.)		Amount	Remarks
				In Figures	In Words		
45	12.5 mm thick plastering in wall, ceiling, floor and other structure including preparation of cement sand mortar in ratio 1:4 lead up to 30 m , surface dressing, sprinkling with water, finishing the surface and curing including supply of all materials, all complete work in all respects as per the approved drawings, technical specifications, and as directed by the Engineer	Sq.m.	3707.42				
46	Providing and applying 38MM THICK (1½") 1:2:4 CEMENT CONCRETE FLOOR FINISH: Providing and laying in required line , level and pattern 38mm thick (1½") cement concrete flooring 1:2:4 (1cement : 2 coarse sand: 4 aggregate and finished top layer with floating coat of neat cement slurry as per drawings, specifications and instructions.	Sq.m.	318.82				
47	Supply, delivery & Laying of two or more coats of Weathercotof approved brand and colour on exterior fair face wall ,surface including one coat of primer to give even and uniform shadeall complete work in all respects as per the approved drawings, technical specifications, and as directed by the Engineer.)	Sq.m.	1459.26				
48	Supply, delivery & Laying of two or more coat of Plastic Emulsion Paint on interior surfaces ,surface including one coat of primer to give even and uniform shadeall complete work in all respects as per the approved drawings, technical specifications, and as directed by the Engineer.)	Sq.m.	753.85				
49	Supply, delivery & Laying of two coats of Synthetic Enamel Paint over iron/timber surface including one coat of primer to give even and uniform shadeall complete work in all respects as per the approved drawings, technical specifications, and as directed by the Engineer.)	Sq.m.	941.06				

Government of Nepal
Ministry of Water Supply
Department of Water Supply and Sewerage Management
Water Supply and Sewerage Management Office
Butwal

Name of Project: Construction of Entire Works of Imiliya Water Supply Project, Buddhabhumi-09, Kapilvastu
Contract ID: 02/083-84/NCB/Works/C/WSSMOBTL

Office Chief

Government of Nepal
Ministry of Infrastructure Development
Department of Water Supply and Sewerage Management
Water Supply and Sewerage Management Office
Butwal, Rupandehi

Priced Bill of Quantities

S.N.	Description of Works	Unit	Quantity	Rate (NRs.)		Amount	Remarks
				In Figures	In Words		
50	Providing and fitting of CGI coloured sheet roofing (26 gauge medium) including all necessary hardware fittings such as nut, bolts, J-hooks , bitumen washers, cleats etc all complete as per requirement and instructions of the Engineer.	Sq.m.	128.67				
51	Supply, Providing and fitting of GI plane sheet roofing ridge cover (26 gauge medium) including all necessary hardware fittings such as nut, bolts, J-hooks , bitumen washers, cleats etc all complete as per requirement and instructions of the Engineer.	Rm	10.25				
52	Supply & Fixation of 40 mm Dia. Medium Class GI pipe for the Hand Rail/lader Purpose incl. jointing by GI fittings, welding & embedding in RCC post.as per the approved drawings, technical specifications, and as directed by the Engineer.	Rm	433.26				
53	Providing, laying and fixing 150mm wide G I. water stoper all complete as per the approved drawings, technical specifications, and as directed by the Engineer.	Rm	131.61				
54	Providing, laying and fixing water level indicator all complete as per as per the approved drawings, technical specifications, and as directed by the Engineer.	Set	2.00				
55	Supply , placing, fixing of 600*600 mm dia CI cover with locking set MS all complete work in all respects as per the approved drawings, technical specifications, and as directed by the Engineer.	Set	49.00				
56	Installation of pipes and fittings for RVT capacity of 200 cum as per drawing and instruction of engineer	Job	1.00				

Government of Nepal
Ministry of Water Supply
Department of Water Supply and Sewerage Management
Water Supply and Sewerage Management Office
Butwal

Name of Project: Construction of Entire Works of Imiliya Water Supply Project, Buddhabhumi-09, Kapilvastu
Contract ID: 02/083-84/NCB/Works/C/WSSMOBTL

Office Chief

Government of Nepal
Ministry of Infrastructure Development
Department of Water Supply and Sewerage Management
Water Supply and Sewerage Management Office
Butwal, Rupandehi

Priced Bill of Quantities

S.N.	Description of Works	Unit	Quantity	Rate (NRs.)		Amount	Remarks
				In Figures	In Words		
57	Supply , placing, fixing Fire Hydrant Set (80 mm dia) set (80mm dia GI Pipe -3 no.,80mm dia GI equal Tee -1 no., 80mm dia Flange set-1 no.,80mm dia GI union-1 no., 80 mm dia GI nipple-2 no.,80 mm dia Gate valve-1 no.,80 mm dia GI Elbow-1 no., 80 mm dia DI flange-1 no., DN 80 Post Fire Hydrant-1 no., 80 mm dia GI Flange Set with Nut Bolt & Washer all complete work in all respects as per the approved drawings, technical specifications, and as directed by the Engineer.	Set	5.00				
58	Supply , placing, fixing of Electric Dosing system with 2 no. of 200 liters HDPE tanks; Seko AKS 603 dosing pump with range of 4 LPH at 12 bar to 8 LPH at 2 bar: 0.55 Mixer moter with PE coated Stainless Steel agitator, double-step MS Skid; interconnection pipe and fittings with 3 nos. of ball valves; electrical works all complete work in all respects as per the approved drawings, technical specifications, and as directed by the Engineer.	Set	1.00				
59	Provding & fixing for Fencing Work with 50mm dia. Black Iron Pipe Post @ 2.5 m each with 25*25*5mm Iron angled frame including 8mm Square pipe and 3*20mm grill work allcomplete as per drawing, specification and instruction of engineer.	Sq.m.	166.50				
60	Supply delivery of 100 mm GI Pipe(HC),114.3 mm OD @ Weight pre meter 9.75 , all complete work in all respects as per the approved drawings, technical specifications, and as directed by the Engineer.)	Rm	27.00				
61	Supply delivery of Electrification work (Point Socket, Power Cable, Wiring,MCCB,bulb,Fan as per technical direction) for pump house , transporation and portaring all complete work as per clause 3 and other specification and instruction of engineer and other related standards or equivalent)	Job	3.00				

Government of Nepal
Ministry of Water Supply
Department of Water Supply and Sewerage Management
Water Supply and Sewerage Management Office
Butwal

Name of Project: Construction of Entire Works of Imiliya Water Supply Project, Buddhabhumi-09, Kapilvastu
Contract ID: 02/083-84/NCB/Works/C/WSSMOBTL

Government of Nepal Ministry of Infrastructure Development Department of Water Supply and Sewerage Management Water Supply and Sewerage Management Office Butwal, Rupandehi

Office Chief

Priced Bill of Quantities

S.N.	Description of Works	Unit	Quantity	Rate (NRs.)		Amount	Remarks
				In Figures	In Words		
62	Dismantling of existing structures like culverts, bridges, retaining walls and other structure comprising of masonry, cement concrete, wood work, steel work, including scaffolding wherever necessary, sorting the dismantled Material, disposal of unserviceable Material and stacking the serviceable Material with all lifts and lead of 1000 meters - Cement Concrete Grade M-15 & M-20 - By Mechanical means	Cu.m.	240.00				
63	Dismantling of flexible pavements and disposal of dismantled Material up to a lead of 1000 metres, stacking serviceable and unserviceable material separately (Bituminous course),all complete work in all respects as per the approved drawings, technical specifications, and as directed by the Engineer.	Cu.m.	360.00				
64	Providing, laying and spreading Material on a prepared sub grade, adding the designed quantity of cement to the spread Material, mixing in place , grading and compacting at OMC to achieve the desired unconfined compressive strength and to form a layer of sub-base/baseall complete work in all respects as per the approved drawings, technical specifications, and as directed by the Engineer.	Cu.m.	180.00				
65	Crusher Run Macadam : Providing and laying Crusher Run Macadam on a prepared surface, spreading and mixing , watering and compacting to form a layer of sub-base/Base course all complete work in all respects as per the approved drawings, technical specifications, and as directed by the Engineer.	Cu.m.	180.00				
66	Providing and applying tack coat with hot Bitumen at specified rate on the prepared non bituminous surfaces including cleaning all complete work in all respects as per the approved drawings, technical specifications, and as directed by the Engineer.	litr.	1200.00				

Government of Nepal
Ministry of Water Supply
Department of Water Supply and Sewerage Management
Water Supply and Sewerage Management Office
Butwal

Name of Project: Construction of Entire Works of Imiliya Water Supply Project, Buddhabhumi-09, Kapilvastu
Contract ID: 02/083-84/NCB/Works/C/WSSMOBTL

Government of Nepal Ministry of Infrastructure Development Department of Water Supply and Sewerage Management Water Supply and Sewerage Management Office Butwal, Rupandehi

Office Chief

Priced Bill of Quantities

S.N.	Description of Works	Unit	Quantity	Rate (NRs.)		Amount	Remarks
				In Figures	In Words		
67	Providing and applying prime coat with hot bitumen (including appropriate cutter) on prepared surface of granular base including cleaning of road surface and spraying by mechanical means all complete work in all respects as per the approved drawings, technical specifications, and as directed by the Engineer.	litr.	1200.00				
68	Providing and laying open-graded premix carpet of 20 mm thickness composed of 13.2 mm to 5.6 mm aggregates as wearing course on a previously prepared base as per drawing and Technical Specifications ,all complete work in all respects as per the approved drawings, technical specifications, and as directed by the Engineer.	Cu.m.	7.20				
69	Providing and Laying Reinforced cement concrete 300mm NP3 Collar jointed pipe for culverts including fixing collar with cement mortar 1:2 all complete work in all respects as per the approved drawings, technical specifications, and as directed by the Engineer.	Rm	200.00				
70	Supply and Transportation of fabricated mild steel vessel for Vertical Aerator with diameter 1500mm and height 3000mm both end fitted with machine made dish ends, fabricated from MS, shell plate thickness 8mm, machine made dish end plate thickness of 10mm all complete works as per drawings, specifications and instrution of engineer.	Set	3.00				
71	Supply of Air Compressor having ccapacity 50-60 m3/hr, 12 kg/cm2 working pressure 300 volt 3 phase 7.5HP, 50Hz single stage with automatic pressure relief switch, fittings and fixer , with 200 litre capacity air tar-tk, complete set as per drawings, specifications and instrution of engineer.	Set	3.00				

Government of Nepal
Ministry of Water Supply
Department of Water Supply and Sewerage Management
Water Supply and Sewerage Management Office
Butwal

Name of Project: Construction of Entire Works of Imiliya Water Supply Project, Buddhabhumi-09, Kapilvastu
Contract ID: 02/083-84/NCB/Works/C/WSSMOBTL

Government of Nepal
Ministry of Infrastructure Development
Department of Water Supply and Sewerage Management
Water Supply and Sewerage Management Office
Butwal, Rupandehi

Office Chief

Priced Bill of Quantities

S.N.	Description of Works	Unit	Quantity	Rate (NRs.)		Amount	Remarks
				In Figures	In Words		
72	Supply of Stainless steel metallic pall rings packing 16 X 16 X 0.3 mm in Aeration tower with capacity 50-60 m3/hr perating pressure 12 Kg/cm2 along with catalytic media all completes as per drawings, specifications and instrution of engineer.	Cu.m.	7.95				
73	Supply, installation, testing and commissioning of Vertical Pressure Filter with diameter 2600mm and height 3000mm both end fitted with machine made dish ends, fabricated from MS, shell plate thickness 8mm machine made dish end plate of thickness of 10mm all, capacity 50-60 m3/hr perating pressure 12 Kg/cm2 complete works all as per drawing, specification and instruction of engineer.	Set	3.00				
74	Supply and Installation of 40mm-Gravel for support Manifold pipe , for Pressure Filter Vessel as per drawing, specification and instruction of engineer.)	Cu.m.	4.78				
75	Supply and Installation of 12-16mm-Gravel , for Pressure Filter Vessel as per drawing, specification and instruction of engineer.)	Cu.m.	3.19				
76	Supply and Installation of 12-8mm-Gravel , for Pressure Filter Vessel as per drawing, specification and instruction of engineer.)	Cu.m.	3.19				
77	Supply and Installation of 8-5mm- Gravel , for Pressure Filter Vessel as per drawing, specification and instruction of engineer.)	Cu.m.	1.59				
78	Supply and Installation of 5-2mm-Sand , for Pressure Filter Vessel as per drawing, specification and instruction of engineer.)	Cu.m.	3.19				
79	Supply and Installation of 1-2mm-Sand , for Pressure Filter Vessel as per drawing, specification and instruction of engineer.)	Cu.m.	3.19				

Government of Nepal
Ministry of Water Supply
Department of Water Supply and Sewerage Management
Water Supply and Sewerage Management Office
Butwal

Government of Nepal Ministry of Infrastructure Development Department of Water Supply and Sewerage Management Water Supply and Sewerage Management Office Butwal, Rupandehi

Office Chief

Name of Project: Construction of Entire Works of Imiliya Water Supply Project, Buddhabhumi-09, Kapilvastu
Contract ID: 02/083-84/NCB/Works/C/WSSMOBTL

Priced Bill of Quantities

S.N.	Description of Works	Unit	Quantity	Rate (NRs.)		Amount	Remarks
				In Figures	In Words		
80	Supply and Installation of 0-1mm-Sand , for Pressure Filter Vessel as per drawing, specification and instruction of engineer.)	Cu.m.	3.19				
81	Supply and Installation of Supply and placing filter media MnO2 30kg/bag , for Pressure Filter Vessel as per drawing, specification and instruction of engineer.)	Cu.m.	3.19				
82	Supply and Installation of Katalox Light (FiltrationMedia) treatment or Model ATS Powder-Lead and Mercury Adsorbent , for Pressure Filter Vessel as per drawing, specification and instruction of engineer.)	Cu.m.	3.19				
83	Supply and installation of Jointing of 150mm dia,MSpipeandfittingsas required: (a)From main supply pipeline to the inlet of the aerator.(b)From out let of the aerator to the inlet of the filter.(c) From outlet of the filter to OHT.(d)From chlorinator to the to inlet of the aerator PP and PVC pipe as required. MS exposed fittings MS valves, NRV, MS Aerator inlet pipe, filter operating pipe, Filter out let pipe & connection to existing CI pipe all complete as per drawing, specification and instruction of engineer.	Set	3.00				
84	Supply, delivery, Installation, Testing and Commissioning works of treatment plant as per Drawing, Design and site Engineers Instruction.	Job	3.00				
85	Supply delivery and installation of Flanged Joint, DI pipe, Dia 250 mm K-9 types including accessories all complete work in all respects as per the approved drawings, technical specifications, and as directed by the Engineer.	Rm	72.00				

Government of Nepal
Ministry of Water Supply
Department of Water Supply and Sewerage Management
Water Supply and Sewerage Management Office
Butwal

Name of Project: Construction of Entire Works of Imiliya Water Supply Project, Buddhabhumi-09, Kapilvastu
Contract ID: 02/083-84/NCB/Works/C/WSSMOBTL

Office Chief

Government of Nepal
Ministry of Infrastructure Development
Department of Water Supply and Sewerage Management
Water Supply and Sewerage Management Office
Butwal, Rupandehi

Priced Bill of Quantities

S.N.	Description of Works	Unit	Quantity	Rate (NRs.)		Amount	Remarks
				In Figures	In Words		
86	Supply delivery and installation of Flanged Joint, DI pipe, Dia 300 mm K-9 types including accessories all complete work in all respects as per the approved drawings, technical specifications, and as directed by the Engineer.	Rm	24.00				
87	Supply delivery and installation of DI Flanged Bell Mouth, 250 mm K-9 types including accessories all complete work in all respects as per the approved drawings, technical specifications, and as directed by the Engineer.	Pc.	3.00				
88	Supply delivery and installation of DI Flanged Bell Mouth, 300 mm K-9 types including accessories all complete work in all respects as per the approved drawings, technical specifications, and as directed by the Engineer.	Pc.	1.00				
89	Supply delivery and installation of DI Single Flanged Tail Piece 250 mm dia K-9 types including accessories all complete work in all respects as per the approved drawings, technical specifications, and as directed by the Engineer.	Pc.	6.00				
90	Supply delivery and installation of DI Single Flanged Tail Piece 300 mm dia K-9 types including accessories all complete work in all respects as per the approved drawings, technical specifications, and as directed by the Engineer.	Pc.	2.00				
91	Supply delivery and installation of DI Double Flanged Tail Piece 250 mm dia K-9 types including accessories all complete work in all respects as per the approved drawings, technical specifications, and as directed by the Engineer.	Pc.	3.00				
92	Supply delivery and installation of DI Double Flanged Tail Piece 300 mm dia K-9 types including accessories all complete work in all respects as per the approved drawings, technical specifications, and as directed by the Engineer.	Pc.	1.00				

Government of Nepal
Ministry of Water Supply
Department of Water Supply and Sewerage Management
Water Supply and Sewerage Management Office
Butwal

Name of Project: Construction of Entire Works of Imiliya Water Supply Project, Buddhabhumi-09, Kapilvastu
Contract ID: 02/083-84/NCB/Works/C/WSSMOBTL

Office Chief

Government of Nepal Ministry of Infrastructure Development Department of Water Supply and Sewerage Management Water Supply and Sewerage Management Office Butwal, Rupandehi

Priced Bill of Quantities

S.N.	Description of Works	Unit	Quantity	Rate (NRs.)		Amount	Remarks
				In Figures	In Words		
93	Supply delivery and installation of DI All Flanged Tee, Dia 250 mm x 80 mm K-9 types including accessories all complete work in all respects as per the approved drawings, technical specifications, and as directed by the Engineer.	Pc.	6.00				
94	Supply delivery and installation of DI All Flanged Tee, Dia 300 mm x 80 mm K-9 types including accessories all complete work in all respects as per the approved drawings, technical specifications, and as directed by the Engineer.	Pc.	2.00				
95	Supply delivery and installation of DI Double Flanged, 90 Deg Bend, Dia 250 mm K-9 types including accessories all complete work in all respects as per the approved drawings, technical specifications, and as directed by the Engineer.	Pc.	6.00				
96	Supply delivery and installation of DI Double Flanged, 90 Deg Bend, Dia 300 mm K-9 types including accessories all complete work in all respects as per the approved drawings, technical specifications, and as directed by the Engineer.	Pc.	2.00				
97	Supply delivery and installation of DI Double Flanged Sluice Valve, Dia 300 mm K-9 types including accessories all complete work in all respects as per the approved drawings, technical specifications, and as directed by the Engineer.	Pc.	1.00				
98	Supply delivery and installation of DI Duck Foot 90 Degree Bend, 250 mm K-9 types including accessories all complete work in all respects as per the approved drawings, technical specifications, and as directed by the Engineer.	Pc.	3.00				
99	Supply delivery and installation of DI Duck Foot 90 Degree Bend, 300 mm K-9 types including accessories all complete work in all respects as per the approved drawings, technical specifications, and as directed by the Engineer.	Pc.	1.00				

Government of Nepal
Ministry of Water Supply
Department of Water Supply and Sewerage Management
Water Supply and Sewerage Management Office
Butwal

Name of Project: Construction of Entire Works of Imiliya Water Supply Project, Buddhabhumi-09, Kapilvastu
Contract ID: 02/083-84/NCB/Works/C/WSSMOBTL

Office Chief

Government of Nepal
Ministry of Infrastructure Development
Department of Water Supply and Sewerage Management
Water Supply and Sewerage Management Office
Butwal, Rupandehi

Priced Bill of Quantities

S.N.	Description of Works	Unit	Quantity	Rate (NRs.)		Amount	Remarks
				In Figures	In Words		
100	Laying and Jointing of Pipes & Fittings, Flanged Joint, DI pipe, Dia 250 mm K-9 types including accessories all complete work in all respects as per the approved drawings, technical specifications, and as directed by the Engineer.	Rm	72.00				
101	Laying and Jointing of Pipes & Fittings, Flanged Joint, DI pipe, Dia 300 mm K-9 types including accessories all complete work in all respects as per the approved drawings, technical specifications, and as directed by the Engineer.	Rm	24.00				
102	Laying and Jointing of Pipes & Fittings, Flanged Joint, DI pipe, Dia 125 mm K-9 types including accessories all complete work in all respects as per the approved drawings, technical specifications, and as directed by the Engineer.	Rm	225.00				
103	Laying and Jointing of Pipes & Fittings, Flanged Joint, DI pipe, Dia 200 mm K-9 types including accessories all complete work in all respects as per the approved drawings, technical specifications, and as directed by the Engineer.	Rm	60.00				
104	Supply, delivery of Adjustable Wrench-8" all complete work in all respects as per the approved drawings, technical specifications, and as directed by the Engineer.	Pc.	2.00				
105	Supply, delivery of Adjustable Wrench-10" all complete work in all respects as per the approved drawings, technical specifications, and as directed by the Engineer.	Pc.	1.00				
106	Supply, delivery of Monkey pliers-10" all complete work in all respects as per the approved drawings, technical specifications, and as directed by the Engineer.	Pc.	1.00				
107	Supply, delivery of Pipe wrench-14" all complete work in all respects as per the approved drawings, technical specifications, and as directed by the Engineer.	Pc.	1.00				
108	Supply, delivery of Pipe wrench-18" all complete work in all respects as per the approved drawings, technical specifications, and as directed by the Engineer.	Pc.	1.00				

Government of Nepal
Ministry of Water Supply
Department of Water Supply and Sewerage Management
Water Supply and Sewerage Management Office
Butwal

Name of Project: Construction of Entire Works of Imiliya Water Supply Project, Buddhabhumi-09, Kapilvastu
Contract ID: 02/083-84/NCB/Works/C/WSSMOBTL

Office Chief

Government of Nepal Ministry of Infrastructure Development Department of Water Supply and Sewerage Management Water Supply and Sewerage Management Office Butwal, Rupandehi

Priced Bill of Quantities

S.N.	Description of Works	Unit	Quantity	Rate (NRs.)		Amount	Remarks
				In Figures	In Words		
109	Supply, delivery of Pipe wrench-24" all complete work in all respects as per the approved drawings, technical specifications, and as directed by the Engineer.	Pc.	1.00				
110	Supply, delivery of Chain Pipe wrench-4" all complete work in all respects as per the approved drawings, technical specifications, and as directed by the Engineer.	Pc.	1.00				
111	Supply, delivery of Chain Pipe wrench-6" all complete work in all respects as per the approved drawings, technical specifications, and as directed by the Engineer.	Pc.	1.00				
112	Supply, delivery of Screw driver all complete work in all respects as per the approved drawings, technical specifications, and as directed by the Engineer.	Set	4.00				
113	Supply, delivery of Chisel-6" all complete work in all respects as per the approved drawings, technical specifications, and as directed by the Engineer.	Pc.	1.00				
114	Supply, delivery of Chisel-8" all complete work in all respects as per the approved drawings, technical specifications, and as directed by the Engineer.	Pc.	1.00				
115	Supply, delivery of Chisel-12" all complete work in all respects as per the approved drawings, technical specifications, and as directed by the Engineer.	Pc.	1.00				
116	Supply, delivery of Die Set-1/2"-1" all complete work in all respects as per the approved drawings, technical specifications, and as directed by the Engineer.	Set	1.00				
117	Supply, delivery of Die Set-1.5"-2" all complete work in all respects as per the approved drawings, technical specifications, and as directed by the Engineer.	Set	1.00				
118	Supply, delivery of Ball Pan Hammer-1/2kg all complete work in all respects as per the approved drawings, technical specifications, and as directed by the Engineer.	Pc.	1.00				

Government of Nepal
Ministry of Water Supply
Department of Water Supply and Sewerage Management
Water Supply and Sewerage Management Office
Butwal

Name of Project: Construction of Entire Works of Imiliya Water Supply Project, Buddhabhumi-09, Kapilvastu
Contract ID: 02/083-84/NCB/Works/C/WSSMOBTL

Office Chief

Government of Nepal
Ministry of Infrastructure Development
Department of Water Supply and Sewerage Management
Water Supply and Sewerage Management Office
Butwal, Rupandehi

Priced Bill of Quantities

S.N.	Description of Works	Unit	Quantity	Rate (NRs.)		Amount	Remarks
				In Figures	In Words		
119	Supply, delivery of Ball Pan Hammer-1kg all complete work in all respects as per the approved drawings, technical specifications, and as directed by the Engineer.	Pc.	1.00				
120	Supply, delivery of Ratchet Die set1/2"-1" all complete work in all respects as per the approved drawings, technical specifications, and as directed by the Engineer.	Pc.	1.00				
121	Supply, delivery of Ratchet Die set 1.5"-2" all complete work in all respects as per the approved drawings, technical specifications, and as directed by the Engineer.	Pc.	1.00				
122	Supply, delivery of Hackhaw frame (6 mm) all complete work in all respects as per the approved drawings, technical specifications, and as directed by the Engineer.	Set	1.00				
123	Supply, delivery of pick axes all complete work in all respects as per the approved drawings, technical specifications, and as directed by the Engineer.	Pc.	5.00				
124	Supply, delivery of Shovel all complete work in all respects as per the approved drawings, technical specifications, and as directed by the Engineer.	Pc.	5.00				
125	Supply, delivery of Blow Torch 1 Pint all complete work in all respects as per the approved drawings, technical specifications, and as directed by the Engineer.	Pc.	3.00				
126	Supply, delivery of Electric pipe cutter set of approved quality for pipeup to 250 mm diameter all complete work in all respects as per the approved drawings, technical specifications, and as directed by the Engineer.	Set	1.00				
127	Supply, delivery of Standard electromechanical butt welding machine set of approved quality for HDPE pipe fittings and jointing up to 250mm diameter all complete work in all respects as per the approved drawings, technical specifications, and as directed by the Engineer.	Set	1.00				

Government of Nepal
Ministry of Water Supply
Department of Water Supply and Sewerage Management
Water Supply and Sewerage Management Office
Butwal

Name of Project: Construction of Entire Works of Imiliya Water Supply Project, Buddhabhumi-09, Kapilvastu
Contract ID: 02/083-84/NCB/Works/C/WSSMOBTL

Office Chief

Government of Nepal Ministry of Infrastructure Development Department of Water Supply and Sewerage Management Water Supply and Sewerage Management Office Butwal, Rupandehi

Priced Bill of Quantities

S.N.	Description of Works	Unit	Quantity	Rate (NRs.)		Amount	Remarks
				In Figures	In Words		
128	Supply, delivery of Standard pipe vice set of approved quality for 15mm to 125 mmGI pipe all complete work in all respects as per the approved drawings, technical specifications, and as directed by the Engineer.	Set	1.00				
129	Supply, delivery of 3 ton chain pulley with hanger and accessories all complete work in all respects as per the approved drawings, technical specifications, and as directed by the Engineer.	Set	2.00				
130	Supply, delivery of DN150 clamp for lowering of submersible motor pump set all complete work in all respects as per the approved drawings, technical specifications, and as directed by the Engineer.	Set	6.00				
131	Supply, delivery of Tool Box all complete work in all respects as per the approved drawings, technical specifications, and as directed by the Engineer.	Set	2.00				
132	Supply, delivery of Hammer 1 kg with handle all complete work in all respects as per the approved drawings, technical specifications, and as directed by the Engineer.	Nos.	2.00				
133	Supply, delivery of Hammer 2 kg with handle all complete work in all respects as per the approved drawings, technical specifications, and as directed by the Engineer.	Nos.	2.00				
134	Supply, delivery of Pipe wrench heavy duty to clamp upto DN 200 pipe all complete work in all respects as per the approved drawings, technical specifications, and as directed by the Engineer.	Nos.	2.00				
135	Supply, delivery of Pipe wrench heavy duty to clamp upto DN 100 pipe all complete work in all respects as per the approved drawings, technical specifications, and as directed by the Engineer.	Nos.	2.00				

Government of Nepal
Ministry of Water Supply
Department of Water Supply and Sewerage Management
Water Supply and Sewerage Management Office
Butwal

Name of Project: Construction of Entire Works of Imiliya Water Supply Project, Buddhabhumi-09, Kapilvastu
Contract ID: 02/083-84/NCB/Works/C/WSSMOBTL

Office Chief

Government of Nepal
Ministry of Infrastructure Development
Department of Water Supply and Sewerage Management
Water Supply and Sewerage Management Office
Butwal, Rupandehi

Priced Bill of Quantities

S.N.	Description of Works	Unit	Quantity	Rate (NRs.)		Amount	Remarks
				In Figures	In Words		
136	Supply, delivery of 1/2" dia Compression Brass Union including accessories all complete work in all respects as per the approved drawings, technical specifications, and as directed by the Engineer.)	Nos.	7137.00				
137	Supply, delivery of 1/2" dia GI Elbow including accessories all complete work in all respects as per the approved drawings, technical specifications, and as directed by the Engineer.)	Nos.	9516.00				
138	Supply, delivery of 1/2" dia Ball Valve including accessories all complete work in all respects as per the approved drawings, technical specifications, and as directed by the Engineer.)	Nos.	2379.00				
139	Supply, delivery of 1/2" x 3" long GI Nipple including accessories all complete work in all respects as per the approved drawings, technical specifications, and as directed by the Engineer.)	Nos.	7137.00				
140	Supply, delivery of 1/2" x 9" long GI Nipple including accessories all complete work in all respects as per the approved drawings, technical specifications, and as directed by the Engineer.)	Nos.	4758.00				
141	Supply, delivery of 1/2" dia bras ferrule including accessories all complete work in all respects as per the approved drawings, technical specifications, and as directed by the Engineer.)	Nos.	2379.00				
142	Supply, delivery of 1/2"/(25-50 mm dia) HDPE saddle set including accessories all complete work in all respects as per the approved drawings, technical specifications, and as directed by the Engineer.)	Nos.	2379.00				
143	Supply delivery , laying and Jointing of 150 mm ØGI Pipe with socket jointg including accessories all complete work in all respects as per the approved drawings, technical specifications, and as directed by the Engineer.	Rm	404.00				

Government of Nepal
Ministry of Water Supply
Department of Water Supply and Sewerage Management
Water Supply and Sewerage Management Office
Butwal

Office Chief

Government of Nepal
Ministry of Infrastructure Development
Department of Water Supply and Sewerage Management
Water Supply and Sewerage Management Office
Butwal, Rupandehi

Name of Project: Construction of Entire Works of Imiliya Water Supply Project, Buddhabhumi-09, Kapilvastu
Contract ID: 02/083-84/NCB/Works/C/WSSMOBTL

Priced Bill of Quantities

S.N.	Description of Works	Unit	Quantity	Rate (NRs.)		Amount	Remarks
				In Figures	In Words		
144	Supply delivery , laying and Jointing of 200 mm ØGI Pipe with socket jointg including accessories all complete work in all respects as per the approved drawings, technical specifications, and as directed by the Engineer.	Rm	1204.35				
145	Supply delivery , laying and Jointing of 20mm ØPN16 , PE-100 HDPE pipe with Butt welding including accessories all complete work in all respects as per the approved drawings, technical specifications, and as directed by the Engineer.	Rm	47580.00				
146	Supply delivery , laying and Jointing of 50mm ØPN10, PE-100 HDPE pipe with Butt welding including accessories all complete work in all respects as per the approved drawings, technical specifications, and as directed by the Engineer.	Rm	39033.27				
147	Supply delivery , laying and Jointing of 63mm ØPN10, PE-100 HDPE pipe with Butt welding including accessories all complete work in all respects as per the approved drawings, technical specifications, and as directed by the Engineer.	Rm	6352.09				
148	Supply delivery , laying and Jointing of 75mm ØPN10, PE-100 HDPE pipe with Butt welding including accessories all complete work in all respects as per the approved drawings, technical specifications, and as directed by the Engineer.	Rm	4183.91				
149	Supply delivery , laying and Jointing of 90mm ØPN6, PE-100 HDPE pipe with Butt welding including accessories all complete work in all respects as per the approved drawings, technical specifications, and as directed by the Engineer.	Rm	7181.32				
150	Supply delivery , laying and Jointing of 110mm ØPN6, PE-100 HDPE pipe with Butt welding including accessories all complete work in all respects as per the approved drawings, technical specifications, and as directed by the Engineer.	Rm	3418.85				

Government of Nepal
Ministry of Water Supply
Department of Water Supply and Sewerage Management
Water Supply and Sewerage Management Office
Butwal

Name of Project: Construction of Entire Works of Imiliya Water Supply Project, Buddhabhumi-09, Kapilvastu
Contract ID: 02/083-84/NCB/Works/C/WSSMOBTL

Office Chief

Government of Nepal
Ministry of Infrastructure Development
Department of Water Supply and Sewerage Management
Water Supply and Sewerage Management Office
Butwal, Rupandehi

Priced Bill of Quantities

S.N.	Description of Works	Unit	Quantity	Rate (NRs.)		Amount	Remarks
				In Figures	In Words		
151	Supply delivery , laying and Jointing of 125mm ØPN6, PE-100 HDPE pipe with Butt welding including accessories all complete work in all respects as per the approved drawings, technical specifications, and as directed by the Engineer.	Rm	850.19				
152	Supply delivery , laying and Jointing of 140mm ØPN6, PE-100 HDPE pipe with Butt welding including accessories all complete work in all respects as per the approved drawings, technical specifications, and as directed by the Engineer.	Rm	463.22				
153	Supply delivery , laying and Jointing of 160mm ØPN6, PE-100 HDPE pipe with Butt welding including accessories all complete work in all respects as per the approved drawings, technical specifications, and as directed by the Engineer.	Rm	1631.83				
154	Supply delivery , laying and Jointing of 200mm ØPN6, PE-100 HDPE pipe with Butt welding including accessories all complete work in all respects as per the approved drawings, technical specifications, and as directed by the Engineer.	Rm	193.27				
155	Supply delivery , laying and Jointing of 225mm ØPN6, PE-100 HDPE pipe with Butt welding including accessories all complete work in all respects as per the approved drawings, technical specifications, and as directed by the Engineer.	Rm	578.96				
156	Supply delivery , laying and Jointing of 280mm ØPN6, PE-100 HDPE pipe with Butt welding including accessories all complete work in all respects as per the approved drawings, technical specifications, and as directed by the Engineer.	Rm	237.66				
157	Supply delivery , laying and Jointing of 315mm ØPN6, PE-10 HDPE pipe with Butt welding including accessories all complete work in all respects as per the approved drawings, technical specifications, and as directed by the Engineer.	Rm	67.36				

Government of Nepal
Ministry of Water Supply
Department of Water Supply and Sewerage Management
Water Supply and Sewerage Management Office
Butwal

Name of Project: Construction of Entire Works of Imiliya Water Supply Project, Buddhabhumi-09, Kapilvastu
Contract ID: 02/083-84/NCB/Works/C/WSSMOBTL

Office Chief

Government of Nepal
Ministry of Infrastructure Development
Department of Water Supply and Sewerage Management
Water Supply and Sewerage Management Office
Butwal, Rupandehi

Priced Bill of Quantities

S.N.	Description of Works	Unit	Quantity	Rate (NRs.)		Amount	Remarks
				In Figures	In Words		
158	Supply delivery and installation of Gate Valve 50 mm dia (NS 149-2044) with Butt welding including accessories all complete work in all respects as per the approved drawings, technical specifications, and as directed by the Engineer.	Pc.	28.00				
159	Supply delivery and installation of GI Nipple 50 mm dia (6-inches long) with Butt welding including accessories all complete work in all respects as per the approved drawings, technical specifications, and as directed by the Engineer.	Pc.	16.00				
160	Supply delivery and installation of GI Reducer 65 mm x 50 mm with Butt welding including accessories all complete work in all respects as per the approved drawings, technical specifications, and as directed by the Engineer.	Pc.	16.00				
161	Supply delivery and installation of GI/HDPE Flanged Set 50 mm dia with Adopter with Butt welding including accessories all complete work in all respects as per the approved drawings, technical specifications, and as directed by the Engineer.	Pc.	32.00				
162	Supply delivery and installation of Brass Union 50 mm dia with Butt welding including accessories all complete work in all respects as per the approved drawings, technical specifications, and as directed by the Engineer.	Pc.	16.00				
163	Supply delivery and installation of HDPE Reducer 63 mm x 50 mm dia PE-100 with Butt welding including accessories all complete work in all respects as per the approved drawings, technical specifications, and as directed by the Engineer.	Pc.	82.00				
164	Supply delivery and installation of HDPE Reducer 75 mm x 63 mm dia PE-100 with Butt welding including accessories all complete work in all respects as per the approved drawings, technical specifications, and as directed by the Engineer.	Pc.	8.00				

Government of Nepal
Ministry of Water Supply
Department of Water Supply and Sewerage Management
Water Supply and Sewerage Management Office
Butwal

Name of Project: Construction of Entire Works of Imiliya Water Supply Project, Buddhabhumi-09, Kapilvastu
Contract ID: 02/083-84/NCB/Works/C/WSSMOBTL

Government of Nepal
Ministry of Infrastructure Development
Department of Water Supply and Sewerage Management
Water Supply and Sewerage Management Office
Butwal, Rupandehi

Office Chief

Priced Bill of Quantities

S.N.	Description of Works	Unit	Quantity	Rate (NRs.)		Amount	Remarks
				In Figures	In Words		
165	Supply delivery and installation of HDPE Reducer 75 mm x 50 mm dia PE-100 with Butt welding including accessories all complete work in all respects as per the approved drawings, technical specifications, and as directed by the Engineer.	Pc.	35.00				
166	Supply delivery and installation of HDPE Reducer 90 mm x 75 mm dia PE-100 with Butt welding including accessories all complete work in all respects as per the approved drawings, technical specifications, and as directed by the Engineer.	Pc.	12.00				
167	Supply delivery and installation of HDPE Reducer 90 mm x 63 mm dia PE-100 with Butt welding including accessories all complete work in all respects as per the approved drawings, technical specifications, and as directed by the Engineer.	Pc.	10.00				
168	Supply delivery and installation of HDPE Reducer 90 mm x 50 mm dia PE-100 with Butt welding including accessories all complete work in all respects as per the approved drawings, technical specifications, and as directed by the Engineer.	Pc.	34.00				
169	Supply delivery and installation of HDPE Reducer 110 mm x 90 mm dia PE-100 with Butt welding including accessories all complete work in all respects as per the approved drawings, technical specifications, and as directed by the Engineer.	Pc.	15.00				
170	Supply delivery and installation of HDPE Reducer 110 mm x 75 mm dia PE-100 with Butt welding including accessories all complete work in all respects as per the approved drawings, technical specifications, and as directed by the Engineer.	Pc.	4.00				
171	Supply delivery and installation of HDPE Reducer 110 mm x 63 mm dia PE-100 with Butt welding including accessories all complete work in all respects as per the approved drawings, technical specifications, and as directed by the Engineer.	Pc.	4.00				

Government of Nepal
Ministry of Water Supply
Department of Water Supply and Sewerage Management
Water Supply and Sewerage Management Office
Butwal

Name of Project: Construction of Entire Works of Imiliya Water Supply Project, Buddhabhumi-09, Kapilvastu
Contract ID: 02/083-84/NCB/Works/C/WSSMOBTL

Office Chief

Government of Nepal
Ministry of Infrastructure Development
Department of Water Supply and Sewerage Management
Water Supply and Sewerage Management Office
Butwal, Rupandehi

Priced Bill of Quantities

S.N.	Description of Works	Unit	Quantity	Rate (NRs.)		Amount	Remarks
				In Figures	In Words		
172	Supply delivery and installation of HDPE Reducer 110 mm x 50 mm dia PE-100 with Butt welding including accessories all complete work in all respects as per the approved drawings, technical specifications, and as directed by the Engineer.	Pc.	8.00				
173	Supply delivery and installation of HDPE Reducer 125 mm x 110 mm dia PE-100 with Butt welding including accessories all complete work in all respects as per the approved drawings, technical specifications, and as directed by the Engineer.	Pc.	1.00				
174	Supply delivery and installation of HDPE Reducer 125 mm x 90 mm dia PE-100 with Butt welding including accessories all complete work in all respects as per the approved drawings, technical specifications, and as directed by the Engineer.	Pc.	1.00				
175	Supply delivery and installation of HDPE Reducer 125 mm x 75 mm dia PE-100 with Butt welding including accessories all complete work in all respects as per the approved drawings, technical specifications, and as directed by the Engineer.	Pc.	1.00				
176	Supply delivery and installation of HDPE Reducer 125 mm x 50 mm dia PE-100 with Butt welding including accessories all complete work in all respects as per the approved drawings, technical specifications, and as directed by the Engineer.	Pc.	4.00				
177	Supply delivery and installation of HDPE Reducer 140 mm x 125 mm dia PE-100 with Butt welding including accessories all complete work in all respects as per the approved drawings, technical specifications, and as directed by the Engineer.	Pc.	3.00				
178	Supply delivery and installation of HDPE Reducer 140 mm x 110 mm dia PE-100 with Butt welding including accessories all complete work in all respects as per the approved drawings, technical specifications, and as directed by the Engineer.	Pc.	4.00				

Government of Nepal
Ministry of Water Supply
Department of Water Supply and Sewerage Management
Water Supply and Sewerage Management Office
Butwal

Name of Project: Construction of Entire Works of Imiliya Water Supply Project, Buddhabhumi-09, Kapilvastu
Contract ID: 02/083-84/NCB/Works/C/WSSMOBTL

Office Chief

Government of Nepal Ministry of Infrastructure Development Department of Water Supply and Sewerage Management Water Supply and Sewerage Management Office Butwal, Rupandehi

Priced Bill of Quantities

S.N.	Description of Works	Unit	Quantity	Rate (NRs.)		Amount	Remarks
				In Figures	In Words		
179	Supply delivery and installation of HDPE Reducer 140 mm x 90 mm dia PE-100 with Butt welding including accessories all complete work in all respects as per the approved drawings, technical specifications, and as directed by the Engineer.	Pc.	3.00				
180	Supply delivery and installation of HDPE Reducer 140 mm x 75 mm dia PE-100 with Butt welding including accessories all complete work in all respects as per the approved drawings, technical specifications, and as directed by the Engineer.	Pc.	1.00				
181	Supply delivery and installation of HDPE Reducer 140 mm x 63 mm dia PE-100 with Butt welding including accessories all complete work in all respects as per the approved drawings, technical specifications, and as directed by the Engineer.	Pc.	1.00				
182	Supply delivery and installation of HDPE Reducer 160 mm x 140 mm dia PE-100 with Butt welding including accessories all complete work in all respects as per the approved drawings, technical specifications, and as directed by the Engineer.	Pc.	4.00				
183	Supply delivery and installation of HDPE Reducer 160 mm x 125 mm dia PE-100 with Butt welding including accessories all complete work in all respects as per the approved drawings, technical specifications, and as directed by the Engineer.	Pc.	1.00				
184	Supply delivery and installation of HDPE Reducer 160 mm x 110 mm dia PE-100 with Butt welding including accessories all complete work in all respects as per the approved drawings, technical specifications, and as directed by the Engineer.	Pc.	3.00				
185	Supply delivery and installation of HDPE Reducer 160 mm x 90 mm dia PE-100 with Butt welding including accessories all complete work in all respects as per the approved drawings, technical specifications, and as directed by the Engineer.	Pc.	2.00				

Government of Nepal
Ministry of Water Supply
Department of Water Supply and Sewerage Management
Water Supply and Sewerage Management Office
Butwal

Name of Project: Construction of Entire Works of Imiliya Water Supply Project, Buddhabhumi-09, Kapilvastu
Contract ID: 02/083-84/NCB/Works/C/WSSMOBTL

Office Chief

Government of Nepal
Ministry of Infrastructure Development
Department of Water Supply and Sewerage Management
Water Supply and Sewerage Management Office
Butwal, Rupandehi

Priced Bill of Quantities

S.N.	Description of Works	Unit	Quantity	Rate (NRs.)		Amount	Remarks
				In Figures	In Words		
186	Supply delivery and installation of HDPE Reducer 160 mm x 75 mm dia PE-100 with Butt welding including accessories all complete work in all respects as per the approved drawings, technical specifications, and as directed by the Engineer.	Pc.	1.00				
187	Supply delivery and installation of HDPE Reducer 160 mm x 63 mm dia PE-100 with Butt welding including accessories all complete work in all respects as per the approved drawings, technical specifications, and as directed by the Engineer.	Pc.	1.00				
188	Supply delivery and installation of HDPE Reducer 160 mm x 50 mm dia PE-100 with Butt welding including accessories all complete work in all respects as per the approved drawings, technical specifications, and as directed by the Engineer.	Pc.	5.00				
189	Supply delivery and installation of HDPE Reducer 200 mm x 160 mm dia PE-100 with Butt welding including accessories all complete work in all respects as per the approved drawings, technical specifications, and as directed by the Engineer.	Pc.	1.00				
190	Supply delivery and installation of HDPE Reducer 200 mm x 110 mm dia PE-100 with Butt welding including accessories all complete work in all respects as per the approved drawings, technical specifications, and as directed by the Engineer.	Pc.	1.00				
191	Supply delivery and installation of HDPE Reducer 225 mm x 125 mm dia PE-100 with Butt welding including accessories all complete work in all respects as per the approved drawings, technical specifications, and as directed by the Engineer.	Pc.	1.00				
192	Supply delivery and installation of HDPE Reducer 225 mm x 50 mm dia PE-100 with Butt welding including accessories all complete work in all respects as per the approved drawings, technical specifications, and as directed by the Engineer.	Pc.	4.00				

Government of Nepal
Ministry of Water Supply
Department of Water Supply and Sewerage Management
Water Supply and Sewerage Management Office
Butwal

Name of Project: Construction of Entire Works of Imiliya Water Supply Project, Buddhabhumi-09, Kapilvastu
Contract ID: 02/083-84/NCB/Works/C/WSSMOBTL

Office Chief

Government of Nepal
Ministry of Infrastructure Development
Department of Water Supply and Sewerage Management
Water Supply and Sewerage Management Office
Butwal, Rupandehi

Priced Bill of Quantities

S.N.	Description of Works	Unit	Quantity	Rate (NRs.)		Amount	Remarks
				In Figures	In Words		
193	Supply delivery and installation of HDPE Tee 50 mm dia PE-100 with Butt welding including accessories all complete work in all respects as per the approved drawings, technical specifications, and as directed by the Engineer.	Pc.	120.00				
194	Supply delivery and installation of HDPE Tee 63 mm dia PE-100 with Butt welding including accessories all complete work in all respects as per the approved drawings, technical specifications, and as directed by the Engineer.	Pc.	39.00				
195	Supply delivery and installation of HDPE Tee 75 mm dia PE-100 with Butt welding including accessories all complete work in all respects as per the approved drawings, technical specifications, and as directed by the Engineer.	Pc.	23.00				
196	Supply delivery and installation of HDPE Tee 90 mm dia PE-100 with Butt welding including accessories all complete work in all respects as per the approved drawings, technical specifications, and as directed by the Engineer.	Pc.	22.00				
197	Supply delivery and installation of HDPE Tee 110 mm dia PE-100 with Butt welding including accessories all complete work in all respects as per the approved drawings, technical specifications, and as directed by the Engineer.	Pc.	12.00				
198	Supply delivery and installation of HDPE Tee 140 mm dia PE-100 with Butt welding including accessories all complete work in all respects as per the approved drawings, technical specifications, and as directed by the Engineer.	Pc.	1.00				
199	Supply delivery and installation of HDPE Cross Tee 50 mm dia PE-100 with Butt welding including accessories all complete work in all respects as per the approved drawings, technical specifications, and as directed by the Engineer.	Pc.	16.00				

Government of Nepal
Ministry of Water Supply
Department of Water Supply and Sewerage Management
Water Supply and Sewerage Management Office
Butwal

Name of Project: Construction of Entire Works of Imiliya Water Supply Project, Buddhabhumi-09, Kapilvastu
Contract ID: 02/083-84/NCB/Works/C/WSSMOBTL

Office Chief

Government of Nepal Ministry of Infrastructure Development Department of Water Supply and Sewerage Management Water Supply and Sewerage Management Office Butwal, Rupandehi

Priced Bill of Quantities

S.N.	Description of Works	Unit	Quantity	Rate (NRs.)		Amount	Remarks
				In Figures	In Words		
200	Supply delivery and installation of HDPE Cross Tee 63 mm dia PE-100 with Butt welding including accessories all complete work in all respects as per the approved drawings, technical specifications, and as directed by the Engineer.	Pc.	10.00				
201	Supply delivery and installation of HDPE Cross Tee 75 mm dia PE-100 with Butt welding including accessories all complete work in all respects as per the approved drawings, technical specifications, and as directed by the Engineer.	Pc.	7.00				
202	Supply delivery and installation of HDPE Cross Tee 90 mm dia PE-100 with Butt welding including accessories all complete work in all respects as per the approved drawings, technical specifications, and as directed by the Engineer.	Pc.	11.00				
203	Supply delivery and installation of HDPE Cross Tee 110 mm dia PE-100 with Butt welding including accessories all complete work in all respects as per the approved drawings, technical specifications, and as directed by the Engineer.	Pc.	4.00				
204	Supply delivery and installation of HDPE End Cap 50 mm dia PE-100 with Butt welding including accessories all complete work in all respects as per the approved drawings, technical specifications, and as directed by the Engineer.	Pc.	65.00				
205	Supply delivery and installation of DI Double Flanged reducer, Dia 300 mm x 250 mm K-9 types including accessories all complete work in all respects as per the approved drawings, technical specifications, and as directed by the Engineer.	Pc.	4.00				
206	Supply delivery and installation of DI Double Flanged reducer, Dia 300 mm x 200 mm K-9 types including accessories all complete work in all respects as per the approved drawings, technical specifications, and as directed by the Engineer.	Pc.	3.00				

Government of Nepal
Ministry of Water Supply
Department of Water Supply and Sewerage Management
Water Supply and Sewerage Management Office
Butwal

Name of Project: Construction of Entire Works of Imiliya Water Supply Project, Buddhabhumi-09, Kapilvastu
Contract ID: 02/083-84/NCB/Works/C/WSSMOBTL

Office Chief

Government of Nepal Ministry of Infrastructure Development Department of Water Supply and Sewerage Management Water Supply and Sewerage Management Office Butwal, Rupandehi

Priced Bill of Quantities

S.N.	Description of Works	Unit	Quantity	Rate (NRs.)		Amount	Remarks
				In Figures	In Words		
207	Supply delivery and installation of DI Double Flanged reducer, Dia 150 mm x 125 mm K-9 types including accessories all complete work in all respects as per the approved drawings, technical specifications, and as directed by the Engineer.	Pc.	2.00				
208	Supply delivery and installation of DI Double Flanged reducer, Dia 150 mm x 100 mm K-9 types including accessories all complete work in all respects as per the approved drawings, technical specifications, and as directed by the Engineer.	Pc.	5.00				
209	Supply delivery and installation of DI Double Flanged reducer, Dia 150 mm x 80 mm K-9 types including accessories all complete work in all respects as per the approved drawings, technical specifications, and as directed by the Engineer.	Pc.	2.00				
210	Supply delivery and installation of DI Double Flanged reducer, Dia 150 mm x 65 mm K-9 types including accessories all complete work in all respects as per the approved drawings, technical specifications, and as directed by the Engineer.	Pc.	1.00				
211	Supply delivery and installation of DI Double Flanged reducer, Dia 125 mm x 100 mm K-9 types including accessories all complete work in all respects as per the approved drawings, technical specifications, and as directed by the Engineer.	Pc.	2.00				
212	Supply delivery and installation of DI Double Flanged reducer, Dia 125 mm x 80 mm K-9 types including accessories all complete work in all respects as per the approved drawings, technical specifications, and as directed by the Engineer.	Pc.	2.00				
213	Supply delivery and installation of DI Double Flanged reducer, Dia 100 mm x 80 mm K-9 types including accessories all complete work in all respects as per the approved drawings, technical specifications, and as directed by the Engineer.	Pc.	6.00				

Government of Nepal
Ministry of Water Supply
Department of Water Supply and Sewerage Management
Water Supply and Sewerage Management Office
Butwal

Name of Project: Construction of Entire Works of Imiliya Water Supply Project, Buddhabhumi-09, Kapilvastu
Contract ID: 02/083-84/NCB/Works/C/WSSMOBTL

Government of Nepal
Ministry of Infrastructure Development
Department of Water Supply and Sewerage Management
Water Supply and Sewerage Management Office
Butwal, Rupandehi

Office Chief

Priced Bill of Quantities

S.N.	Description of Works	Unit	Quantity	Rate (NRs.)		Amount	Remarks
				In Figures	In Words		
214	Supply delivery and installation of DI Double Flanged reducer, Dia 100 mm x 65 mm K-9 types including accessories all complete work in all respects as per the approved drawings, technical specifications, and as directed by the Engineer.	Pc.	11.00				
215	Supply delivery and installation of DI Double Flanged reducer, Dia 80 mm x 65 mm K-9 types including accessories all complete work in all respects as per the approved drawings, technical specifications, and as directed by the Engineer.	Pc.	4.00				
216	Supply delivery and installation of DI All Flanged Cross, Dia 300 mm K-9 types including accessories all complete work in all respects as per the approved drawings, technical specifications, and as directed by the Engineer.	Pc.	1.00				
217	Supply delivery and installation of DI All Flanged Cross, Dia 250 mm K-9 types including accessories all complete work in all respects as per the approved drawings, technical specifications, and as directed by the Engineer.	Pc.	2.00				
218	Supply delivery and installation of DI All Flanged Cross, Dia 150 mm K-9 types including accessories all complete work in all respects as per the approved drawings, technical specifications, and as directed by the Engineer.	Pc.	8.00				
219	Supply delivery and installation of DI All Flanged Cross, Dia 100 mm K-9 types including accessories all complete work in all respects as per the approved drawings, technical specifications, and as directed by the Engineer.	Pc.	5.00				
220	Supply delivery and installation of DI All Flanged Cross, Dia 80 mm K-9 types including accessories all complete work in all respects as per the approved drawings, technical specifications, and as directed by the Engineer.	Pc.	1.00				

Government of Nepal
Ministry of Water Supply
Department of Water Supply and Sewerage Management
Water Supply and Sewerage Management Office
Butwal

Name of Project: Construction of Entire Works of Imiliya Water Supply Project, Buddhabhumi-09, Kapilvastu
Contract ID: 02/083-84/NCB/Works/C/WSSMOBTL

Office Chief

Government of Nepal
Ministry of Infrastructure Development
Department of Water Supply and Sewerage Management
Water Supply and Sewerage Management Office
Butwal, Rupandehi

Priced Bill of Quantities

S.N.	Description of Works	Unit	Quantity	Rate (NRs.)		Amount	Remarks
				In Figures	In Words		
221	Supply delivery and installation of DI All Flanged Cross, Dia 65 mm K-9 types including accessories all complete work in all respects as per the approved drawings, technical specifications, and as directed by the Engineer.	Pc.	2.00				
222	Supply delivery and installation of DI/HDPE Flanged Set 300 mm dia with Adopter K-9 types including accessories all complete work in all respects as per the approved drawings, technical specifications, and as directed by the Engineer.	Pc.	3.00				
223	Supply delivery and installation of DI/HDPE Flanged Set 250 mm dia with Adopter K-9 types including accessories all complete work in all respects as per the approved drawings, technical specifications, and as directed by the Engineer.	Pc.	12.00				
224	Supply delivery and installation of DI/HDPE Flanged Set 200 mm dia with Adopter K-9 types including accessories all complete work in all respects as per the approved drawings, technical specifications, and as directed by the Engineer.	Pc.	12.00				
225	Supply delivery and installation of DI/HDPE Flanged Set 150 mm dia with Adopter K-9 types including accessories all complete work in all respects as per the approved drawings, technical specifications, and as directed by the Engineer.	Pc.	55.00				
226	Supply delivery and installation of DI/HDPE Flanged Set 125 mm dia with Adopter K-9 types including accessories all complete work in all respects as per the approved drawings, technical specifications, and as directed by the Engineer.	Pc.	25.00				
227	Supply delivery and installation of DI/HDPE Flanged Set 100 mm dia with Adopter K-9 types including accessories all complete work in all respects as per the approved drawings, technical specifications, and as directed by the Engineer.	Pc.	19.00				

Government of Nepal
Ministry of Water Supply
Department of Water Supply and Sewerage Management
Water Supply and Sewerage Management Office
Butwal

Name of Project: Construction of Entire Works of Imiliya Water Supply Project, Buddhabhumi-09, Kapilvastu
Contract ID: 02/083-84/NCB/Works/C/WSSMOBTL

Office Chief

Government of Nepal
Ministry of Infrastructure Development
Department of Water Supply and Sewerage Management
Water Supply and Sewerage Management Office
Butwal, Rupandehi

Priced Bill of Quantities

S.N.	Description of Works	Unit	Quantity	Rate (NRs.)		Amount	Remarks
				In Figures	In Words		
228	Supply delivery and installation of DI/HDPE Flanged Set 80 mm dia with Adopter K-9 types including accessories all complete work in all respects as per the approved drawings, technical specifications, and as directed by the Engineer.	Pc.	12.00				
229	Supply delivery and installation of DI/HDPE Flanged Set 65 mm dia with Adopter K-9 types including accessories all complete work in all respects as per the approved drawings, technical specifications, and as directed by the Engineer.	Pc.	12.00				
230	Supply delivery and installation of DI Dismantling Joint, Dia 250 mm K-9 types including accessories all complete work in all respects as per the approved drawings, technical specifications, and as directed by the Engineer.	Pc.	4.00				
231	Supply delivery and installation of DI Dismantling Joint, Dia 200 mm K-9 types including accessories all complete work in all respects as per the approved drawings, technical specifications, and as directed by the Engineer.	Pc.	3.00				
232	Supply delivery and installation of DI Dismantling Joint, Dia 150 mm K-9 types including accessories all complete work in all respects as per the approved drawings, technical specifications, and as directed by the Engineer.	Pc.	2.00				
233	Supply delivery and installation of DI Dismantling Joint, Dia 125 mm K-9 types including accessories all complete work in all respects as per the approved drawings, technical specifications, and as directed by the Engineer.	Pc.	2.00				
234	Supply delivery and installation of DI Dismantling Joint, Dia 100 mm K-9 types including accessories all complete work in all respects as per the approved drawings, technical specifications, and as directed by the Engineer.	Pc.	11.00				

Government of Nepal
Ministry of Water Supply
Department of Water Supply and Sewerage Management
Water Supply and Sewerage Management Office
Butwal

Office Chief

Government of Nepal
Ministry of Infrastructure Development
Department of Water Supply and Sewerage Management
Water Supply and Sewerage Management Office
Butwal, Rupandehi

Name of Project: Construction of Entire Works of Imiliya Water Supply Project, Buddhabhumi-09, Kapilvastu
Contract ID: 02/083-84/NCB/Works/C/WSSMOBTL

Priced Bill of Quantities

S.N.	Description of Works	Unit	Quantity	Rate (NRs.)		Amount	Remarks
				In Figures	In Words		
235	Supply delivery and installation of DI Dismantling Joint, Dia 80 mm K-9 types including accessories all complete work in all respects as per the approved drawings, technical specifications, and as directed by the Engineer.	Pc.	10.00				
236	Supply delivery and installation of DI Dismantling Joint, Dia 65 mm K-9 types including accessories all complete work in all respects as per the approved drawings, technical specifications, and as directed by the Engineer.	Pc.	9.00				
237	Supply delivery and installation of DI Double Flanged Sluice Valve, Dia 250 mm K-9 types including accessories all complete work in all respects as per the approved drawings, technical specifications, and as directed by the Engineer.	Pc.	5.00				
238	Supply delivery and installation of DI Double Flanged Sluice Valve, Dia 200 mm K-9 types including accessories all complete work in all respects as per the approved drawings, technical specifications, and as directed by the Engineer.	Pc.	9.00				
239	Supply delivery and installation of DI Double Flanged Sluice Valve, Dia 150 mm K-9 types including accessories all complete work in all respects as per the approved drawings, technical specifications, and as directed by the Engineer.	Pc.	3.00				
240	Supply delivery and installation of DI Double Flanged Sluice Valve, Dia 125 mm K-9 types including accessories all complete work in all respects as per the approved drawings, technical specifications, and as directed by the Engineer.	Pc.	14.00				
241	Supply delivery and installation of DI Double Flanged Sluice Valve, Dia 100 mm K-9 types including accessories all complete work in all respects as per the approved drawings, technical specifications, and as directed by the Engineer.	Pc.	11.00				

Government of Nepal
Ministry of Water Supply
Department of Water Supply and Sewerage Management
Water Supply and Sewerage Management Office
Butwal

Name of Project: Construction of Entire Works of Imiliya Water Supply Project, Buddhabhumi-09, Kapilvastu
Contract ID: 02/083-84/NCB/Works/C/WSSMOBTL

Office Chief

Government of Nepal Ministry of Infrastructure Development Department of Water Supply and Sewerage Management Water Supply and Sewerage Management Office Butwal, Rupandehi

Priced Bill of Quantities

S.N.	Description of Works	Unit	Quantity	Rate (NRs.)		Amount	Remarks
				In Figures	In Words		
242	Supply delivery and installation of DI Double Flanged Sluice Valve, Dia 80 mm K-9 types including accessories all complete work in all respects as per the approved drawings, technical specifications, and as directed by the Engineer.	Pc.	10.00				
243	Supply delivery and installation of DI Double Flanged Sluice Valve, Dia 65 mm K-9 types including accessories all complete work in all respects as per the approved drawings, technical specifications, and as directed by the Engineer.	Pc.	9.00				
244	Supply delivery and installation of DI All Flanged Tee, 65 mm dia K-9 types including accessories all complete work in all respects as per the approved drawings, technical specifications, and as directed by the Engineer.	Pc.	1.00				
245	Supply delivery and installation of DI All Flanged Tee, 80 mm dia K-9 types including accessories all complete work in all respects as per the approved drawings, technical specifications, and as directed by the Engineer.	Pc.	1.00				
246	Supply delivery and installation of DI All Flanged Tee, 100 mm dia K-9 types including accessories all complete work in all respects as per the approved drawings, technical specifications, and as directed by the Engineer.	Pc.	3.00				
247	Supply delivery and installation of DI All Flanged Tee, 125 mm dia K-9 types including accessories all complete work in all respects as per the approved drawings, technical specifications, and as directed by the Engineer.	Pc.	21.00				
248	Supply delivery and installation of DI All Flanged Tee, 150 mm dia K-9 types including accessories all complete work in all respects as per the approved drawings, technical specifications, and as directed by the Engineer.	Pc.	11.00				

Government of Nepal
Ministry of Water Supply
Department of Water Supply and Sewerage Management
Water Supply and Sewerage Management Office
Butwal

Office Chief

Government of Nepal
Ministry of Infrastructure Development
Department of Water Supply and Sewerage Management
Water Supply and Sewerage Management Office
Butwal, Rupandehi

Name of Project: Construction of Entire Works of Imiliya Water Supply Project, Buddhabhumi-09, Kapilvastu
Contract ID: 02/083-84/NCB/Works/C/WSSMOBTL

Priced Bill of Quantities

S.N.	Description of Works	Unit	Quantity	Rate (NRs.)		Amount	Remarks
				In Figures	In Words		
249	Supply delivery and installation of DI All Flanged Tee, 200 mm dia K-9 types including accessories all complete work in all respects as per the approved drawings, technical specifications, and as directed by the Engineer.	Pc.	6.00				
250	Supply delivery and installation of DI All Flanged Tee, 300 mm dia K-9 types including accessories all complete work in all respects as per the approved drawings, technical specifications, and as directed by the Engineer.	Pc.	2.00				
251	Supply delivery and installation of GI Equal Cross 50 mm dia with Butt welding including accessories all complete work in all respects as per the approved drawings, technical specifications, and as directed by the Engineer.	Pc.	16.00				
252	Supply, delivery and installation of Seamless carbon steel schedule 40 pipe confirming to (ASTM-53) and size of 300 mm dia including accessories all complete work in all respects as per the approved drawings, technical specifications, and as directed by the Engineer.	Rm	5.00				
253	Supply, delivery and installation of Seamless carbon steel pipe piece-60 cm long, one end flanged and another end plain and size of 150 mm dia including accessories all complete work in all respects as per the approved drawings, technical specifications, and as directed by the Engineer.	Nos.	1.00				
254	Supply, delivery and installation of Seamless carbon steel bend (135 degree) schedule 40 bend both end flanged and size of 150 mm dia including accessories all complete work in all respects as per the approved drawings, technical specifications, and as directed by the Engineer.	Nos.	1.00				

Government of Nepal
Ministry of Water Supply
Department of Water Supply and Sewerage Management
Water Supply and Sewerage Management Office
Butwal

Office Chief

Government of Nepal
Ministry of Infrastructure Development
Department of Water Supply and Sewerage Management
Water Supply and Sewerage Management Office
Butwal, Rupandehi

Name of Project: Construction of Entire Works of Imiliya Water Supply Project, Buddhabhumi-09, Kapilvastu
Contract ID: 02/083-84/NCB/Works/C/WSSMOBTL

Priced Bill of Quantities

S.N.	Description of Works	Unit	Quantity	Rate (NRs.)		Amount	Remarks
				In Figures	In Words		
255	Supply, delivery and installation of Seamless carbon steel pipe piece-30 cm long, both end flanged and size of 150 mm dia including accessories all complete work in all respects as per the approved drawings, technical specifications, and as directed by the Engineer.	Nos.	4.00				
256	Supply, delivery and installation of Seamless carbon steel schedule 40 Steel Equal tee, both end flanged and size of 150 mm dia including accessories all complete work in all respects as per the approved drawings, technical specifications, and as directed by the Engineer.	Nos.	1.00				
257	Supply, delivery and installation of Cast Steel Sluice Valve, Class 300 confirming to BS:1414 or equivalent. Hydraulic Test pressure: Body 76 kg/cm2, Seat 55 kg/cm2, including ISOD Flange, Nut & bolt, Gasket. Set and size of 150 mm dia including accessories all complete work in all respects as per the approved drawings, technical specifications, and as directed by the Engineer.	Nos.	2.00				
258	Supply, delivery and installation of Cast Steel Non Return Valve (NRV), Class 300 confirming to BS:1414 or equivalent. Hydraulic Test pressure: Body 76 kg/cm2, Seat 55 kg/cm2, including ISOD Flange, Nut & bolt, Gasket. and size of 150 mm dia including accessories all complete work in all respects as per the approved drawings, technical specifications, and as directed by the Engineer.	Nos.	1.00				
259	Supply, delivery and installation of Seamless carbon steel Reducer, both ends flanged and size of 150x100 mm dia including accessories all complete work in all respects as per the approved drawings, technical specifications, and as directed by the Engineer.	Nos.	1.00				

Government of Nepal
Ministry of Water Supply
Department of Water Supply and Sewerage Management
Water Supply and Sewerage Management Office
Butwal

Office Chief

Government of Nepal
Ministry of Infrastructure Development
Department of Water Supply and Sewerage Management
Water Supply and Sewerage Management Office
Butwal, Rupandehi

Name of Project: Construction of Entire Works of Imiliya Water Supply Project, Buddhabhumi-09, Kapilvastu
Contract ID: 02/083-84/NCB/Works/C/WSSMOBTL

Priced Bill of Quantities

S.N.	Description of Works	Unit	Quantity	Rate (NRs.)		Amount	Remarks
				In Figures	In Words		
260	Supply, delivery and installation of Pressure Gauge -3" size and 40 kg/cm² pressure range and size of 80 mm dia including accessories all complete work in all respects as per the approved drawings, technical specifications, and as directed by the Engineer.	Nos.	1.00				
261	Supply, delivery and installation of Seamless carbon steel pipe piece-100 cm long, one end flanged and another end plain and size of 150 mm dia including accessories all complete work in all respects as per the approved drawings, technical specifications, and as directed by the Engineer.	Nos.	3.00				
262	Supply, delivery and installation of DI Mechanical Coupling, Dia 150 mm including accessories all complete work in all respects as per the approved drawings, technical specifications, and as directed by the Engineer.	Nos.	1.00				
263	Supply, delivery and installation of DI Double Flanged, 90 Deg Bend, Dia 150 mm including accessories all complete work in all respects as per the approved drawings, technical specifications, and as directed by the Engineer.	Nos.	2.00				
264	Rig setting up and preparation of mud pit all complete work in all respects as per the approved drawings, technical specifications, and as directed by the Engineer.	Well	3.00				
265	Camp setting and preparation including site clearance all complete work in all respects as per the approved drawings, technical specifications, and as directed by the Engineer.	Well	3.00				
266	Assembling centralising & sinking of guide pipe of size 22" dia to a depth of 10m all complete work in all respects as per the approved drawings, technical specifications, and as directed by the Engineer.	m	30.00				

Government of Nepal
Ministry of Water Supply
Department of Water Supply and Sewerage Management
Water Supply and Sewerage Management Office
Butwal

Name of Project: Construction of Entire Works of Imiliya Water Supply Project, Buddhabhumi-09, Kapilvastu
Contract ID: 02/083-84/NCB/Works/C/WSSMOBTL

Office Chief

Government of Nepal
Ministry of Infrastructure Development
Department of Water Supply and Sewerage Management
Water Supply and Sewerage Management Office
Butwal, Rupandehi

Priced Bill of Quantities

S.N.	Description of Works	Unit	Quantity	Rate (NRs.)		Amount	Remarks
				In Figures	In Words		
267	Drilling of pilot hole by std bit ranging from 7 5/8" to 9 7/8"dia for the first initial depth of 100m with drilling rigmachine in soft formation (Consists of gravel fine to medium,). upto 100 meter. all complete work in all respects as per the approved drawings, technical specifications, and as directed by the Engineer.	m	300.00				
268	Drilling of pilot hole by std bit ranging from 7 5/8" to 9 7/8"dia for the depth beyond 100m with drilling rigmachine in soft formation (Consists of gravel fine to medium,). all complete work in all respects as per the approved drawings, technical specifications, and as directed by the Engineer.	m	300.00				
269	Testing of Electrical logging for full depth of drilled pilot hole (resestivity test)- 150 meter well all complete work in all respects as per the approved drawings, technical specifications, and as directed by the Engineer.	m	600.00				
270	First and second Reaming of pilot hole by std bit above 97/8"and below 17 1/2"dia for the first initial depth of 100m with drilling machine in soft formation(consists of gravel fine to medium) upto 100m all complete work in all respects as per the approved drawings, technical specifications, and as directed by the Engineer.	m	300.00				
271	First and second Reaming of pilot hole by std bit above 97/8"and below 17 1/2"dia for the depth beyond 100m with drilling machine in soft formation(consists of gravel fine to medium) above 100m all complete work in all respects as per the approved drawings, technical specifications, and as directed by the Engineer.	m	300.00				
272	Lowering of pipe assembly of 250/200 mm diameter to a full depth as recommended by electrical logging report all complete work in all respects as per the approved drawings, technical specifications, and as directed by the Engineer.	m	600.00				

Government of Nepal
Ministry of Water Supply
Department of Water Supply and Sewerage Management
Water Supply and Sewerage Management Office
Butwal

Name of Project: Construction of Entire Works of Imiliya Water Supply Project, Buddhabhumi-09, Kapilvastu
Contract ID: 02/083-84/NCB/Works/C/WSSMOBTL

Office Chief

Government of Nepal
Ministry of Infrastructure Development
Department of Water Supply and Sewerage Management
Water Supply and Sewerage Management Office
Butwal, Rupandehi

Priced Bill of Quantities

S.N.	Description of Works	Unit	Quantity	Rate (NRs.)		Amount	Remarks
				In Figures	In Words		
273	Collection of lithological samples at every 2m depth and at every change of formation all complete work in all respects as per the approved drawings, technical specifications, and as directed by the Engineer.	Well	3.00				
274	Supply , delivery and installation of Supply and packing of 4-8 mm dia. Pea gravels = add 10% by considering the losses due to cavity formation during well development for 200 m length all complete work in all respects as per the approved drawings, technical specifications, and as directed by the Engineer.	Cu.m.	36.29				
275	Supply and installation of 250 mm MS housing pipe of thickness 6-3 to 7.0 mm or above having bevelled ends. all complete work in all respects as per the approved drawings, technical specifications, and as directed by the Engineer.	m	135.00				
276	Supply and installation of 200mm MS casing pipe of thickness 6.3 to 7.0mm or above having bevelled endsall complete work in all respects as per the approved drawings, technical specifications, and as directed by the Engineer.	m	405.00				
277	200mm dia SS304 Stainless Steel continuous slotted pipe(Johnsons or Equivalent) of thickness 6.3 to 7.0mm or above with slots of size 1.mmx75mm and percentage of opening ranging from 20-25% throughout having bevelled endsall complete work in all respects as per the approved drawings, technical specifications, and as directed by the Engineer.	m	60.00				
278	Miscellaneous (well cap, cross bar, centralizer, bottom plug, clamps, welding etc) all complete work in all respects as per the approved drawings, technical specifications, and as directed by the Engineer.	Set	3.00				

Government of Nepal
Ministry of Water Supply
Department of Water Supply and Sewerage Management
Water Supply and Sewerage Management Office
Butwal

Name of Project: Construction of Entire Works of Imiliya Water Supply Project, Buddhabhumi-09, Kapilvastu
Contract ID: 02/083-84/NCB/Works/C/WSSMOBTL

Office Chief

Government of Nepal
Ministry of Infrastructure Development
Department of Water Supply and Sewerage Management
Water Supply and Sewerage Management Office
Butwal, Rupandehi

Priced Bill of Quantities

S.N.	Description of Works	Unit	Quantity	Rate (NRs.)		Amount	Remarks
				In Figures	In Words		
279	Well development by drilling Rig machine for well size of 250/200mm dia. (Back washing and inner washing all complete work in all respects as per the approved drawings, technical specifications, and as directed by the Engineer.	m	600.00				
280	Well development by Compressor machine for well size of 250/200mm dia. all complete work in all respects as per the approved drawings, technical specifications, and as directed by the Engineer.	Hrs.	72.00				
281	Well development by belling for an 250/200mm diameter well . all complete work in all respects as per the approved drawings, technical specifications, and as directed by the Engineer.	Hrs.	72.00				
282	Well development by pump 250/200 dia. all complete work in all respects as per the approved drawings, technical specifications, and as directed by the Engineer.	Hrs.	72.00				
283	Pumping Test by suitable pump Drawdown test- Aquifer Test all complete work in all respects as per the approved drawings, technical specifications, and as directed by the Engineer.	Hrs.	72.00				
284	Pumping Test by suitable pump Step drawdown test (at least 4 steps to 36 hours) all complete work in all respects as per the approved drawings, technical specifications, and as directed by the Engineer.	Hrs.	72.00				
285	Pumping Test by suitable pump Recovery Test (for 12 hours) all complete work in all respects as per the approved drawings, technical specifications, and as directed by the Engineer.	Well	3.00				
286	Water quality test all complete work in all respects as per the approved drawings, technical specifications, and as directed by the Engineer.	Well	3.00				
287	Submission of well completion report with, litholog, well design, pumping test analysis and water quality analysis report all complete work in all respects as per the approved drawings, technical specifications, and as directed by the Engineer.	Copies	3.00				

Government of Nepal
Ministry of Water Supply
Department of Water Supply and Sewerage Management
Water Supply and Sewerage Management Office
Butwal

Name of Project: Construction of Entire Works of Imiliya Water Supply Project, Buddhabhumi-09, Kapilvastu
Contract ID: 02/083-84/NCB/Works/C/WSSMOBTL

Office Chief

Priced Bill of Quantities

S.N.	Description of Works	Unit	Quantity	Rate (NRs.)		Amount	Remarks
				In Figures	In Words		
288	Supply, delivery and installation of Porcelain clay white glazed I.P.W.C. COMODE with low level glazed cistern,seat cover complete set. including accessories all complete work in all respects as per the approved drawings, technical specifications, and as directed by the Engineer.	Set	8.00				
289	Supply, delivery and installation of Porcelain clay White glazed wash basin 50X40cm with pedestal and mixture complete set. including accessories all complete work in all respects as per the approved drawings, technical specifications, and as directed by the Engineer.	Set	11.00				
290	Supply, delivery and installation of kitchen sink stainless steel 37" long 8" deep with sink cock all complete set. including accessories all complete work in all respects as per the approved drawings, technical specifications, and as directed by the Engineer.	Nos.	1.00				
291	Supply, delivery and installation of Stainless steel towel rod 1.5X45cm including accessories all complete work in all respects as per the approved drawings, technical specifications, and as directed by the Engineer.	Set	12.00				
292	Supply, delivery and installation of Chrome plated toilet paper holder with necessary accessories, jaquar or equivalent. including accessories all complete work in all respects as per the approved drawings, technical specifications, and as directed by the Engineer.	Nos.	8.00				
293	Supply, delivery and installation of Chrome plated soap tray recessed type jaquar,nova or eqv. with necessary accessories including accessories all complete work in all respects as per the approved drawings, technical specifications, and as directed by the Engineer.	Nos.	11.00				

Government of Nepal
Ministry of Water Supply
Department of Water Supply and Sewerage Management
Water Supply and Sewerage Management Office
Butwal

Name of Project: Construction of Entire Works of Imiliya Water Supply Project, Buddhabhumi-09, Kapilvastu
Contract ID: 02/083-84/NCB/Works/C/WSSMOBTL

Office Chief

Priced Bill of Quantities

S.N.	Description of Works	Unit	Quantity	Rate (NRs.)		Amount	Remarks
				In Figures	In Words		
294	Supply, delivery and installation of Small Flat back White glazed urinal (46.5x35.5x26.5)cm all complete set including accessories all complete work in all respects as per the approved drawings, technical specifications, and as directed by the Engineer.	Nos.	6.00				
295	Supply, delivery and installation of Supplying & fixing PVC Grating 110 mm dia. including accessories all complete work in all respects as per the approved drawings, technical specifications, and as directed by the Engineer.	Nos.	12.00				
296	Supply, delivery and installation of Supplying & fixing PVC floor trap 11x7.5 cm. including accessories all complete work in all respects as per the approved drawings, technical specifications, and as directed by the Engineer.	Nos.	12.00				
297	Supply, delivery and installation of Looking Mirror Modi guard 450x600mm (18"x 24") of high quality, standard brand. including accessories all complete work in all respects as per the approved drawings, technical specifications, and as directed by the Engineer.	Nos.	11.00				
298	Supply, delivery and installation of CP Shower rose 7.5cm including accessories all complete work in all respects as per the approved drawings, technical specifications, and as directed by the Engineer.	Nos.	6.00				
299	Supply, delivery and installation of C.P. 15mm dia Angle valve Jaquar, Nova or eqv. including accessories all complete work in all respects as per the approved drawings, technical specifications, and as directed by the Engineer.	Nos.	18.00				
300	Supply, delivery and installation of 15mm dia. Auto Closing Bibcock with aerator jaquar, Nova or equivalent. including accessories all complete work in all respects as per the approved drawings, technical specifications, and as directed by the Engineer.	Nos.	18.00				

Government of Nepal
Ministry of Water Supply
Department of Water Supply and Sewerage Management
Water Supply and Sewerage Management Office
Butwal

Name of Project: Construction of Entire Works of Imiliya Water Supply Project, Buddhabhumi-09, Kapilvastu
Contract ID: 02/083-84/NCB/Works/C/WSSMOBTL

Office Chief

Government of Nepal
Ministry of Infrastructure Development
Department of Water Supply and Sewerage Management
Water Supply and Sewerage Management Office
Butwal, Rupandehi

Priced Bill of Quantities

S.N.	Description of Works	Unit	Quantity	Rate (NRs.)		Amount	Remarks
				In Figures	In Words		
301	Supply, delivery and installation of 15 mm CP water spray Jaquar, Nova or Marc eqiv. including accessories all complete work in all respects as per the approved drawings, technical specifications, and as directed by the Engineer.	Nos.	8.00				
302	Supply, delivery and installation of 2HP Electric motor Pump monoblock including accessories all complete work in all respects as per the approved drawings, technical specifications, and as directed by the Engineer.	Nos.	1.00				
303	Supply, delivery and installation of 15mm dia CPVC Pipe SDR 11 CTS, 28.1 kg/cm^2 (Flowguard or ISI Standard) includes fixing/laying with necessary fittings all complete. including accessories all complete work in all respects as per the approved drawings, technical specifications, and as directed by the Engineer.	Rm	55.00				
304	Supply, delivery and installation of 20mm dia CPVC Pipe SDR 11 CTS, 28.1 kg/cm^2 (Flowguard or ISI Standard) includes fixing/laying with necessary fittings all complete. including accessories all complete work in all respects as per the approved drawings, technical specifications, and as directed by the Engineer.	Rm	50.00				
305	Supply, delivery and installation of Supplying & fixing 25mm dia CPVC Pipe SDR 11 CTS, 28.1 kg/cm^2 (Flowguard or ISI Standard) includes fixing/laying with necessary fittings all complete. including accessories all complete work in all respects as per the approved drawings, technical specifications, and as directed by the Engineer.	Rm	30.00				
306	Supply, delivery and installation of 110mm PVC pipe of 6 kg/cm2 . including accessories all complete work in all respects as per the approved drawings, technical specifications, and as directed by the Engineer.	Rm	40.00				

Government of Nepal
Ministry of Water Supply
Department of Water Supply and Sewerage Management
Water Supply and Sewerage Management Office
Butwal

Office Chief

Government of Nepal
Ministry of Infrastructure Development
Department of Water Supply and Sewerage Management
Water Supply and Sewerage Management Office
Butwal, Rupandehi

Name of Project: Construction of Entire Works of Imiliya Water Supply Project, Buddhabhumi-09, Kapilvastu
Contract ID: 02/083-84/NCB/Works/C/WSSMOBTL

Priced Bill of Quantities

S.N.	Description of Works	Unit	Quantity	Rate (NRs.)		Amount	Remarks
				In Figures	In Words		
307	Supply, delivery and installation of 75mm PVC pipe of 6 kg/cm2 including accessories all complete work in all respects as per the approved drawings, technical specifications, and as directed by the Engineer.	Rm	60.00				
308	Supply, delivery and installation of 110 mm dia UPVC Y branch including accessories all complete work in all respects as per the approved drawings, technical specifications, and as directed by the Engineer.	Nos.	3.00				
309	Supply, delivery and installation of 110 mm dia UPVC 90 degree bend including accessories all complete work in all respects as per the approved drawings, technical specifications, and as directed by the Engineer.	Nos.	3.00				
310	Supply, delivery and installation of 75 mm dia UPVC Y branch including accessories all complete work in all respects as per the approved drawings, technical specifications, and as directed by the Engineer.	Nos.	3.00				
311	Supply, delivery and installation of 75 mm dia UPVC 90 degree bend including accessories all complete work in all respects as per the approved drawings, technical specifications, and as directed by the Engineer.	Nos.	5.00				
312	Supply, delivery and installation of 50 mm dia UPVC 90 degree bend charge. including accessories all complete work in all respects as per the approved drawings, technical specifications, and as directed by the Engineer.	Nos.	6.00				
313	Supply, delivery and installation of 110 mm dia UPVC Door bend including accessories all complete work in all respects as per the approved drawings, technical specifications, and as directed by the Engineer.	Nos.	5.00				

Government of Nepal
Ministry of Water Supply
Department of Water Supply and Sewerage Management
Water Supply and Sewerage Management Office
Butwal

Office Chief

Government of Nepal
Ministry of Infrastructure Development
Department of Water Supply and Sewerage Management
Water Supply and Sewerage Management Office
Butwal, Rupandehi

Name of Project: Construction of Entire Works of Imiliya Water Supply Project, Buddhabhumi-09, Kapilvastu
Contract ID: 02/083-84/NCB/Works/C/WSSMOBTL

Priced Bill of Quantities

S.N.	Description of Works	Unit	Quantity	Rate (NRs.)		Amount	Remarks
				In Figures	In Words		
314	Supply, delivery and installation of 75 mm dia UPVC Door bend including accessories all complete work in all respects as per the approved drawings, technical specifications, and as directed by the Engineer.	Nos.	5.00				
315	Supply, delivery and installation of 75 mm dia UPVC pipe clip including accessories all complete work in all respects as per the approved drawings, technical specifications, and as directed by the Engineer.	Nos.	25.00				
316	Supply, delivery and installation of 75 mm dia UPVC vent cowl rubber rings and joining solution etc. all complete as directed by site in-charge. including accessories all complete work in all respects as per the approved drawings, technical specifications, and as directed by the Engineer.	Nos.	3.00				
317	Supply, delivery and installation of 110 mm dia UPVC vent cowl including accessories all complete work in all respects as per the approved drawings, technical specifications, and as directed by the Engineer.	Nos.	3.00				
318	Supply, delivery and installation of 1000 litre stainless steel water tank including accessories all complete work in all respects as per the approved drawings, technical specifications, and as directed by the Engineer.	Nos.	2.00				
319	Supply, delivery and installation of 15 mm dia CPVC Ball Valve, CTS Socket all complete. including accessories all complete work in all respects as per the approved drawings, technical specifications, and as directed by the Engineer.	Nos.	3.00				
320	Supply, delivery and installation of 20 mm dia CPVC Ball Valve, CTS Socket all complete. including accessories all complete work in all respects as per the approved drawings, technical specifications, and as directed by the Engineer.	Nos.	3.00				

Government of Nepal
Ministry of Water Supply
Department of Water Supply and Sewerage Management
Water Supply and Sewerage Management Office
Butwal

Office Chief

Government of Nepal
Ministry of Infrastructure Development
Department of Water Supply and Sewerage Management
Water Supply and Sewerage Management Office
Butwal, Rupandehi

Name of Project: Construction of Entire Works of Imiliya Water Supply Project, Buddhabhumi-09, Kapilvastu
Contract ID: 02/083-84/NCB/Works/C/WSSMOBTL

Priced Bill of Quantities

S.N.	Description of Works	Unit	Quantity	Rate (NRs.)		Amount	Remarks
				In Figures	In Words		
321	Supply, delivery and installation of 25 mm dia CPVC Ball Valve, CTS Socket all complete. including accessories all complete work in all respects as per the approved drawings, technical specifications, and as directed by the Engineer.	Nos.	3.00				
322	Supplying and fixing of 10 way TPN DB Double Cover way single pole and neutral, recess type double door horizontal type sheet steel MCB distribution board, 240 volts, on surface/recess, complete with tinned copper busbar, neutral link, earth bar, din bar, detachable gland plate, interconnections, including painting, earthing etc. as required Geco with Isolator (Orient or eqv.), RCCB (ABB, Siemens or eqv.), MCB (Legrand/Siemens or eqv.) including accessories all complete work in all respects as per the approved drawings, technical specifications, and as directed by the Engineer	Set	4.00				
323	Supplying and fixing of Isolator FP 40A - 63A single pole and neutral, recess type double door horizontal type sheet steel MCB distribution board, 240 volts, on surface/recess, complete with tinned copper busbar, neutral link, earth bar, din bar, detachable gland plate, interconnections, including painting, earthing etc. as required Geco with Isolator (Orient or eqv.), RCCB (ABB, Siemens or eqv.), MCB (Legrand/Siemens or eqv.) including accessories all complete work in all respects as per the approved drawings, technical specifications, and as directed by the Engineer	Set	4.00				

Government of Nepal
Ministry of Water Supply
Department of Water Supply and Sewerage Management
Water Supply and Sewerage Management Office
Butwal

Name of Project: Construction of Entire Works of Imiliya Water Supply Project, Buddhabhumi-09, Kapilvastu
Contract ID: 02/083-84/NCB/Works/C/WSSMOBTL

Office Chief

Government of Nepal
Ministry of Infrastructure Development
Department of Water Supply and Sewerage Management
Water Supply and Sewerage Management Office
Butwal, Rupandehi

Priced Bill of Quantities

S.N.	Description of Works	Unit	Quantity	Rate (NRs.)		Amount	Remarks
				In Figures	In Words		
324	Supplying and fixing of Isolator FP 25A to 40A ,(30mA,100,300mA) FP RCCB single pole and neutral, recess type double door horizontal type sheet steel MCB distribution board, 240 volts, on surface/recess, complete with tinned copper busbar, neutral link, earth bar, din bar, detachable gland plate, interconnections, including painting, earthing etc. as required Geco with Isolator (Orient or eqv.), RCCB (ABB, Siemens or eqv.), MCB (Legrand/Siemens or eqv.) including accessories all complete work in all respects as per the approved drawings, technical specifications, and as directed by the Engineer	Set	4.00				
325	Supplying and fixing of I6–32 amp MCB SP (single pole) and neutral, recess type double door horizontal type sheet steel MCB distribution board, 240 volts, on surface/recess, complete with tinned copper busbar, neutral link, earth bar, din bar, detachable gland plate, interconnections, including painting, earthing etc. as required Geco with Isolator (Orient or eqv.), RCCB (ABB, Siemens or eqv.), MCB (Legrand/Siemens or eqv.) including accessories all complete work in all respects as per the approved drawings, technical specifications, and as directed by the Engineer	Set	52.00				
326	Supply, Transportation and Installation of 1" = 25.4mm diameter pvc conduit including accessories all complete work in all respects as per the approved drawings, technical specifications, and as directed by the Engineer	Rm	250.00				
327	Supply, Transportation and Installation of Metal Junction box 4"×4" including accessories all complete work in all respects as per the approved drawings, technical specifications, and as directed by the Engineer	Set	6.00				

Government of Nepal
Ministry of Water Supply
Department of Water Supply and Sewerage Management
Water Supply and Sewerage Management Office
Butwal

Office Chief

Government of Nepal
Ministry of Infrastructure Development
Department of Water Supply and Sewerage Management
Water Supply and Sewerage Management Office
Butwal, Rupandehi

Name of Project: Construction of Entire Works of Imiliya Water Supply Project, Buddhabhumi-09, Kapilvastu
Contract ID: 02/083-84/NCB/Works/C/WSSMOBTL

Priced Bill of Quantities

S.N.	Description of Works	Unit	Quantity	Rate (NRs.)		Amount	Remarks
				In Figures	In Words		
328	Supply, Transportation and Installation of 1.5 sq. mm PVC insulated Copper wire(earthing wire) including accessories all complete work in all respects as per the approved drawings, technical specifications, and as directed by the Engineer	Rm	350.00				
329	Supply, Transportation and Installation of 2.5 sq. mm PVC insulated Copper wire including accessories all complete work in all respects as per the approved drawings, technical specifications, and as directed by the Engineer	Rm	1350.00				
330	Supply, Transportation and Installation of 4.0 sq. mm PVC insulated Copper wire including accessories all complete work in all respects as per the approved drawings, technical specifications, and as directed by the Engineer	Rm	1250.00				
331	Supply, Transportation and Installation of Fan dimmer 60 – 500 W including accessories all complete work in all respects as per the approved drawings, technical specifications, and as directed by the Engineer	Set	8.00				
332	Supply, Transportation and Installation of One Gang two way switch including accessories all complete work in all respects as per the approved drawings, technical specifications, and as directed by the Engineer	Set	8.00				
333	Supply, Transportation and Installation of One Gang one way switch including accessories all complete work in all respects as per the approved drawings, technical specifications, and as directed by the Engineer	Set	12.00				
334	Supply, Transportation and Installation of Two gang one way switch including accessories all complete work in all respects as per the approved drawings, technical specifications, and as directed by the Engineer	Set	5.00				

Government of Nepal
Ministry of Water Supply
Department of Water Supply and Sewerage Management
Water Supply and Sewerage Management Office
Butwal

Office Chief

Government of Nepal
Ministry of Infrastructure Development
Department of Water Supply and Sewerage Management
Water Supply and Sewerage Management Office
Butwal, Rupandehi

Name of Project: Construction of Entire Works of Imiliya Water Supply Project, Buddhabhumi-09, Kapilvastu
Contract ID: 02/083-84/NCB/Works/C/WSSMOBTL

Priced Bill of Quantities

S.N.	Description of Works	Unit	Quantity	Rate (NRs.)		Amount	Remarks
				In Figures	In Words		
335	Supply, Transportation and Installation of Three Gang one way switch including accessories all complete work in all respects as per the approved drawings, technical specifications, and as directed by the Engineer	Set	2.00				
336	Supply, Transportation and Installation of Four gang one way switch including accessories all complete work in all respects as per the approved drawings, technical specifications, and as directed by the Engineer	Set	5.00				
337	Supply, Transportation and Installation of Six gang one way switch including accessories all complete work in all respects as per the approved drawings, technical specifications, and as directed by the Engineer	Set	10.00				
338	Supply, Transportation and Installation of Eight gang one way switch including accessories all complete work in all respects as per the approved drawings, technical specifications, and as directed by the Engineer	Set	4.00				
339	Supply, Transportation and Installation of 6/16 Amp , 2/3 Pin Power sockets with switch & indicator including accessories all complete work in all respects as per the approved drawings, technical specifications, and as directed by the Engineer	Set	41.00				
340	Supply, Transportation and Installation of 2- pair cable wire (2×2×0.45) mmHeavy including accessories all complete work in all respects as per the approved drawings, technical specifications, and as directed by the Engineer	Set	250.00				
341	Supply, Transportation and Installation of 20- pair cable wire (20×2×0.45) mm Heavy including accessories all complete work in all respects as per the approved drawings, technical specifications, and as directed by the Engineer	Rm	45.00				

Government of Nepal
Ministry of Water Supply
Department of Water Supply and Sewerage Management
Water Supply and Sewerage Management Office
Butwal

Name of Project: Construction of Entire Works of Imiliya Water Supply Project, Buddhabhumi-09, Kapilvastu
Contract ID: 02/083-84/NCB/Works/C/WSSMOBTL

Office Chief

Government of Nepal
Ministry of Infrastructure Development
Department of Water Supply and Sewerage Management
Water Supply and Sewerage Management Office
Butwal, Rupandehi

Priced Bill of Quantities

S.N.	Description of Works	Unit	Quantity	Rate (NRs.)		Amount	Remarks
				In Figures	In Words		
342	Supply, Transportation and Installation of Telephone socket single including accessories all complete work in all respects as per the approved drawings, technical specifications, and as directed by the Engineer	Rm	8.00				
343	Supply, Transportation and Installation of 1 x 18 watt CFL Down light with reflector & diffuser (conceal light) Complete Set Wipro WCP23118 including accessories all complete work in all respects as per the approved drawings, technical specifications, and as directed by the Engineer	Set	45.00				
344	Supply, Transportation and Installation of 1×40 watt FTL box fittings surface/wall mount WIF 14140 including accessories all complete work in all respects as per the approved drawings, technical specifications, and as directed by the Engineer	Nos.	25.00				
345	Supply, Transportation and Installation of 48" = 1200mm size ceiling Fan including accessories all complete work in all respects as per the approved drawings, technical specifications, and as directed by the Engineer	Nos.	8.00				
346	Supply, Transportation and Installation of 12" = 300mm Exhaust Fan including accessories all complete work in all respects as per the approved drawings, technical specifications, and as directed by the Engineer	Nos.	10.00				
347	Supply, Transportation and Installation of 11/13 watt CFL Wall bracket/spout light/mirror light / bulk head(weatherproof) best quality including accessories all complete work in all respects as per the approved drawings, technical specifications, and as directed by the Engineer	Nos.	10.00				

Government of Nepal
Ministry of Water Supply
Department of Water Supply and Sewerage Management
Water Supply and Sewerage Management Office
Butwal

Office Chief

Government of Nepal
Ministry of Infrastructure Development
Department of Water Supply and Sewerage Management
Water Supply and Sewerage Management Office
Butwal, Rupandehi

Name of Project: Construction of Entire Works of Imiliya Water Supply Project, Buddhabhumi-09, Kapilvastu
Contract ID: 02/083-84/NCB/Works/C/WSSMOBTL

Priced Bill of Quantities

S.N.	Description of Works	Unit	Quantity	Rate (NRs.)		Amount	Remarks
				In Figures	In Words		
348	Supply, Transportation and Installation of Earthing System - Supply and installation of Following size Earthing system including copper/ G.I earth plate(65mm x 65mm x 3.15), copper strip(25mm x 3mm) electrode, 29mm dia GI pipe of 1m length including accessories and providing masonry enclosure with cover plate having locking arrangement and watering pipe etc with charcoal and salt as required for complete earthing system with 1.5m depth as per drawing (ISO or international standard). including accessories all complete work in all respects as per the approved drawings, technical specifications, and as directed by the Engineer	Set	1.00				
349	Supplying and fixing of 400 AMP 9"×36"×48" size Panel board-double door type with locking arrangement with 2 coat of red oxide metal prime & 3 stage quality paint before final coat of enamel paint (Single phase, Neutral link, earth link) Phase and Neutral copper busbar including necessary accessories for internal wiring at the board with MCCB / MCB(Legrand/Siemens, ABB, Schnieder), measuring instrument and Power Cables (NS marked) or equivalent including accessories all complete work in all respects as per the approved drawings, technical specifications, and as directed by the Engineer	Set	1.00				
350	Supply, Transportation and Installation of Kilo watt hour energy meter 3 phase direct including accessories all complete work in all respects as per the approved drawings, technical specifications, and as directed by the Engineer	Set	1.00				
351	Supply, Transportation and Installation of 0-500 volt meter including accessories all complete work in all respects as per the approved drawings, technical specifications, and as directed by the Engineer	Set	1.00				

Government of Nepal
Ministry of Water Supply
Department of Water Supply and Sewerage Management
Water Supply and Sewerage Management Office
Butwal

Name of Project: Construction of Entire Works of Imiliya Water Supply Project, Buddhabhumi-09, Kapilvastu
Contract ID: 02/083-84/NCB/Works/C/WSSMOBTL

Office Chief

Government of Nepal
Ministry of Infrastructure Development
Department of Water Supply and Sewerage Management
Water Supply and Sewerage Management Office
Butwal, Rupandehi

Priced Bill of Quantities

S.N.	Description of Works	Unit	Quantity	Rate (NRs.)		Amount	Remarks
				In Figures	In Words		
352	Supply, Transportation and Installation of 60/100 Amp meter including accessories all complete work in all respects as per the approved drawings, technical specifications, and as directed by the Engineer	Set	1.00				
353	Supply, Transportation and Installation of Panel Indicator including accessories all complete work in all respects as per the approved drawings, technical specifications, and as directed by the Engineer	Set	1.00				
354	Supply, Transportation and Installation of 3.5 core, 300 sq.mm Aluminum conductor Armoured including accessories all complete work in all respects as per the approved drawings, technical specifications, and as directed by the Engineer	Rm	20.00				
355	Supply, Transportation and Installation of 4 core, 300 sq.mm Aluminum conductor Armoured including accessories all complete work in all respects as per the approved drawings, technical specifications, and as directed by the Engineer	Rm	20.00				
356	Supply, Transportation and Installation of 16AMP- 63AMP TP MCCB 25KA including accessories all complete work in all respects as per the approved drawings, technical specifications, and as directed by the Engineer	Set	4.00				
357	Supply, Transportation and Installation of 40–63 amp MCB DP including accessories all complete work in all respects as per the approved drawings, technical specifications, and as directed by the Engineer	Set	4.00				
358	Supply, Transportation and Installation of 10 sq. mm PVC insulated Copper wire including accessories all complete work in all respects as per the approved drawings, technical specifications, and as directed by the Engineer	Rm	40.00				

Government of Nepal
Ministry of Water Supply
Department of Water Supply and Sewerage Management
Water Supply and Sewerage Management Office
Butwal

Name of Project: Construction of Entire Works of Imiliya Water Supply Project, Buddhabhumi-09, Kapilvastu
Contract ID: 02/083-84/NCB/Works/C/WSSMOBTL

Office Chief

Government of Nepal
Ministry of Infrastructure Development
Department of Water Supply and Sewerage Management
Water Supply and Sewerage Management Office
Butwal, Rupandehi

Priced Bill of Quantities

S.N.	Description of Works	Unit	Quantity	Rate (NRs.)		Amount	Remarks
				In Figures	In Words		
359	Supply, Transportation and Installation of 25 sq.mm 4-core Aluminum conductor Armoured including accessories all complete work in all respects as per the approved drawings, technical specifications, and as directed by the Engineer	Rm	30.00				
360	Supply, Transportation and Installation of 50 Pair Telephone D.B.with crown tag including accessories all complete work in all respects as per the approved drawings, technical specifications, and as directed by the Engineer	Set	1.00				
361	Supply, Tramsportation and Erection of 11m steel Tubular poles, excavation of footing, making pole vertical and placing in footing ramming, back filling of soil for strengthening fitting including accessories all complete work in all respects as per the approved drawings, technical specifications, and as directed by the Engineer	Set	20.00				
362	Supply Transportation and Installation of HT Line fitting acessories as per specification, drawing and Engineer instruction all complete-Pin Insulator (voltage 11kv)	Set	40.00				
363	Supply Transportation and Erection of HT Line fitting acessories as per specification, drawing and Engineer instruction all complete-Disc insulator (voltage 11kv) with Grafer	Nos.	40.00				
364	Supply Transportation and Installation of HT Line fitting acessories as per specification, drawing and Engineer instruction all complete-Dead end Clamp	Set	40.00				
365	Supply Transportation and Erection of HT Line fitting acessories as per specification, drawing and Engineer instruction all complete-PG Clamp	Set	40.00				
366	Supply Transportation and Installation of HT Line fitting acessories as per specification, drawing and Engineer instruction all complete-Steel Crossarm Channel (100*50*6.4*5*300) mm	Set	14.00				

Government of Nepal
Ministry of Water Supply
Department of Water Supply and Sewerage Management
Water Supply and Sewerage Management Office
Butwal

Name of Project: Construction of Entire Works of Imiliya Water Supply Project, Buddhabhumi-09, Kapilvastu
Contract ID: 02/083-84/NCB/Works/C/WSSMOBTL

Office Chief

Government of Nepal
Ministry of Infrastructure Development
Department of Water Supply and Sewerage Management
Water Supply and Sewerage Management Office
Butwal, Rupandehi

Priced Bill of Quantities

S.N.	Description of Works	Unit	Quantity	Rate (NRs.)		Amount	Remarks
				In Figures	In Words		
367	Supply Transportation and Installation of HT Line fitting acessories as per specification, drawing and Engineer instruction all complete-Steel Crossarm Channel (100*50*6.4*5*1200) mm	Set	14.00				
368	Supply Transportation and Installation of HT Line fitting acessories as per specification, drawing and Engineer instruction all complete-Steel Crossarm Channel (100*50*6.4*5*2390) mm	Set	6.00				
369	Supply Transportation and Installation of HT Line fitting acessories as per specification, drawing and Engineer instruction all complete-Transformer Mounting Cross Arm(100*50*6.4*5*2490)	Set	20.00				
370	Supply Transportation and Installation of HT Line fitting acessories as per specification, drawing and Engineer instruction all complete-Transformer mounting bracing arm(size 500 mm long)	Set	12.00				
371	Supply Transportation and Installation of HT Line fitting acessories as per specification, drawing and Engineer instruction all complete-Flat Crossarm Brace (40*6.0*660) mm	Nos.	6.00				
372	Supply Transportation and Installation of HT Line fitting acessories as per specification, drawing and Engineer instruction all complete-Bracing Angle (40*40*5*2071) mm	Nos.	3.00				
373	Supply Transportation and Installation of HT Line fitting acessories as per specification, drawing and Engineer instruction all complete-Crossarm Bracing Angle (40*40*5*2723)mm	Nos.	3.00				
374	Supply Transportation and Installation of HT Line fitting acessories as per specification, drawing and Engineer instruction all complete-Pole clamp	Set	20.00				

Government of Nepal
Ministry of Water Supply
Department of Water Supply and Sewerage Management
Water Supply and Sewerage Management Office
Butwal

Name of Project: Construction of Entire Works of Imiliya Water Supply Project, Buddhabhumi-09, Kapilvastu
Contract ID: 02/083-84/NCB/Works/C/WSSMOBTL

Office Chief

Government of Nepal
Ministry of Infrastructure Development
Department of Water Supply and Sewerage Management
Water Supply and Sewerage Management Office
Butwal, Rupandehi

Priced Bill of Quantities

S.N.	Description of Works	Unit	Quantity	Rate (NRs.)		Amount	Remarks
				In Figures	In Words		
375	Supply, Transportaion and Stringing of 0.05 sq. inch ACSR Cover conductor with proper tension in 11kV HT Line as per specification, drawing and Engineer instruction all complete	km	1.65				
376	Supply, Transportation and Installation of Stay set including pit excavation and backfilling, stay wire and stay insulator fitting -Stay set HT 8 feet long with HT Insulator	Set	20.00				
377	Supply, Transportation and Installation of Stay set including pit excavation and backfilling, stay wire and stay insulator fitting -Stay Wire 7/12	Set	240.00				
378	Supply, Transportation and Installation of Stay set including pit excavation and backfilling, stay wire and stay insulator fitting - Nut&Bolts (size)	Set	5.00				
379	Supply, Transportation and Installation of Distribution Transformer set with earthing works, LA, DO, GS with Earthing complete all complete set as per technical specifications and drawings-50 kVA 11/0.4kV Transformer	Set	2.00				
380	Supply, Transportation and Installation of HT Line fitting -Earthing Plate including accessories all complete work in all respects as per the approved drawings, technical specifications, and as directed by the Engineer	Nos.	9.00				
381	Supply, Transportation and Installation of HT Line fitting -Earthing wire including accessories all complete work in all respects as per the approved drawings, technical specifications, and as directed by the Engineer	Nos.	6.00				
382	Supply, Transportation and Installation of HT Line fitting -Earthing powder including accessories all complete work in all respects as per the approved drawings, technical specifications, and as directed by the Engineer	Set	75.00				

Government of Nepal
Ministry of Water Supply
Department of Water Supply and Sewerage Management
Water Supply and Sewerage Management Office
Butwal

Name of Project: Construction of Entire Works of Imiliya Water Supply Project, Buddhabhumi-09, Kapilvastu
Contract ID: 02/083-84/NCB/Works/C/WSSMOBTL

Office Chief

Government of Nepal Ministry of Infrastructure Development Department of Water Supply and Sewerage Management Water Supply and Sewerage Management Office Butwal, Rupandehi

Priced Bill of Quantities

S.N.	Description of Works	Unit	Quantity	Rate (NRs.)		Amount	Remarks
				In Figures	In Words		
383	Supply, Transportation and Installation of HT Line fitting - Lightening arrestor (Voltage 11 KV) including accessories all complete work in all respects as per the approved drawings, technical specifications, and as directed by the Engineer	Set	9.00				
384	Supply, Transportation and Installation of HT Line fitting -Drop out fuse set (Voltage 11 KV) including accessories all complete work in all respects as per the approved drawings, technical specifications, and as directed by the Engineer	Nos.	9.00				
385	Supply, Transportation and Installation of Distribution Transformer set with earthing works, LA, DO, GS with Earthing complete all complete set as per technical specifications and drawings-25 kVA 11/0.4kV Transformer including accessories all complete work in all respects as per the approved drawings, technical specifications, and as directed by the Engineer	Set	1.00				
386	Supply, Transportation and Installation of 4 core (XLPE and PVC Insulation) Armoured Aluminum 35 sq. mm cable IS Marked or Equivalent as per IS 7098 Part I & II , IS 1554 Part I& II and IS-694 including accessories all complete work in all respects as per the approved drawings, technical specifications, and as directed by the Engineer	Rm	20.00				
387	Supply, Transportation and Installation of 4 core (XLPE and PVC Insulation) Armoured Aluminum 25 sq. mm cable IS Marked or Equivalent as per IS 7098 Part I & II , IS 1554 Part I& II and IS-694 including accessories all complete work in all respects as per the approved drawings, technical specifications, and as directed by the Engineer	Rm	40.00				

Government of Nepal
Ministry of Water Supply
Department of Water Supply and Sewerage Management
Water Supply and Sewerage Management Office
Butwal

Name of Project: Construction of Entire Works of Imiliya Water Supply Project, Buddhabhumi-09, Kapilvastu
Contract ID: 02/083-84/NCB/Works/C/WSSMOBTL

Office Chief

Government of Nepal
Ministry of Infrastructure Development
Department of Water Supply and Sewerage Management
Water Supply and Sewerage Management Office
Butwal, Rupandehi

Priced Bill of Quantities

S.N.	Description of Works	Unit	Quantity	Rate (NRs.)		Amount	Remarks
				In Figures	In Words		
388	Supply, Transportation and Installation of 3.5 core (XLPE and PVC Insulation) Armoured cu. 4 sq. mm cable IS Marked or Equivalent as per IS 7098 Part I & II , IS 1554 Part I& II and IS-694 including accessories all complete work in all respects as per the approved drawings, technical specifications, and as directed by the Engineer	Rm	30.00				
389	Supply, Transportation and Installation of 3.5 core 25 sq.mm (XLPE and PVC Insulation) insuleted multi strand Copper un-armoed cable IS Marked or Equivalent as per IS 7098 Part I & II , IS 1554 Part I& II and IS-694 including accessories all complete work in all respects as per the approved drawings, technical specifications, and as directed by the Engineer	Rm	15.00				
390	Supply, Transportation and Installation of 3.5 core 25 sq.mm (XLPE and PVC Insulation) insuleted multi strand Copper armoed cable IS Marked or Equivalent as per IS 7098 Part I & II , IS 1554 Part I& II and IS-695 including accessories all complete work in all respects as per the approved drawings, technical specifications, and as directed by the Engineer	Rm	60.00				
391	Supply, Transportation and Installation of 3 core 16 sq.mm (XLPE and PVC Insulation) insuleted multi strand Copper Flat , IS 1554 Part I& II and IS-696 including accessories all complete work in all respects as per the approved drawings, technical specifications, and as directed by the Engineer	Rm	90.00				

Government of Nepal
Ministry of Water Supply
Department of Water Supply and Sewerage Management
Water Supply and Sewerage Management Office
Butwal

Office Chief

Government of Nepal
Ministry of Infrastructure Development
Department of Water Supply and Sewerage Management
Water Supply and Sewerage Management Office
Butwal, Rupandehi

Name of Project: Construction of Entire Works of Imiliya Water Supply Project, Buddhabhumi-09, Kapilvastu
Contract ID: 02/083-84/NCB/Works/C/WSSMOBTL

Priced Bill of Quantities

S.N.	Description of Works	Unit	Quantity	Rate (NRs.)		Amount	Remarks
				In Figures	In Words		
392	Supply, Transportation and Installation of Modular LT Control Panel for 25 HP with Premagnetic contactor based and dizital controller module of 25HP@ 1 no. Star Delta Starter, Fully Automatic Operation of Pump (2W) Auto / Manual mode, Manual Changeover for AVR by pass & Automatic Phase corrector , 60/75/100/125 Amp Panel Board with copper Busbar and hardware (1400mm *1600mm*300) -1 , 100 Amp TPN MCCB -1, Electronic Digital Volt Meter - 1, Electronic Digital Ammeter - 1, 100/5 Amp C.T. coil per set (3 pc) - 1, Indication LED Light - 3, volt meter selector switch -1, Amp meter Selector switch -1, Amp glass fuse with holder -3, Kilo watt hour energy meter 3 phase -1, 63 A TPN MCCB,25kA -12, Pre-magnetic Contactor based Star Delta 25 HP Starter module -1, 16/32 A DP MCB - 21, 16A SP MCB - 1, 63 A TPN 4 Pole manual changeover switch - 1, Cement/Sand Mortar for Installation with required Brick wall and redoing the chiselled area (Civil works), (600x600x3) mm electrolytically pure copper plate at least 3m below the ground level surrounded by alternate layer of charcoal and common salt to thickness of 300mm around the electrode effectively grounded by means of 8 swg bare cu wire conductor including the necessary connecting, fixing and jont materials as well as evacuation and backfillng works as per drawing, specification, electricity rules and instruction all complete -1 set including accessories all complete work in all respects as per the approved drawings, technical specifications, and as directed by the Engineer	Set	1.00				

Government of Nepal
Ministry of Water Supply
Department of Water Supply and Sewerage Management
Water Supply and Sewerage Management Office
Butwal

Office Chief

Government of Nepal
Ministry of Infrastructure Development
Department of Water Supply and Sewerage Management
Water Supply and Sewerage Management Office
Butwal, Rupandehi

Name of Project: Construction of Entire Works of Imiliya Water Supply Project, Buddhabhumi-09, Kapilvastu
Contract ID: 02/083-84/NCB/Works/C/WSSMOBTL

Priced Bill of Quantities

S.N.	Description of Works	Unit	Quantity	Rate (NRs.)		Amount	Remarks
				In Figures	In Words		
393	Supply, Transportation and Installation of Modular LT Control Panel for 60 HP with Premagnetic contactor based and dizital controller module of 20HP@ 3 no. Star Delta Starter, Fully Automatic Operation of Pump (2W) Auto / Manual mode, Manual Changeover for AVR by pass & Automatic Phase corrector , 60/75/100/125 Amp Panel Board with copper Busbar and hardware (1400mm *1600mm*300) -1 , 63 Amp TPN MCCB -1, Electronic Digital Volt Meter - 1, Electronic Digital Ammeter - 1, 100/5 Amp C.T. coil per set (3 pc) - 1, Indication LED Light - 3, volt meter selector switch -1, Amp meter Selector switch -1, Amp glass fuse with holder -3, Kilo watt hour energy meter 3 phase -1, 63 A TPN MCCB,25kA -12, Pre-magnetic Contactor based Star Delta 25 HP Starter module -1, 16/32 A DP MCB - 21, 16A SP MCB - 1, 63 A TPN 4 Pole manual changeover switch - 1, Cement/Sand Mortar for Installation with required Brick wall and redoing the chiselled area (Civil works), (600x600x3) mm electrolytically pure copper plate at least 3m below the ground level surrounded by alternate layer of charcoal and common salt to thickness of 300mm around the electrode effectively grounded by means of 8 swg bare cu wire conductor including the necessary connecting, fixing and jont materials as well as evacuation and backfillng works as per drawing, specification, electricity rules and instruction all complete -1 set including accessories all complete work in all respects as per the approved drawings, technical specifications, and as directed by the Engineer	Set	3.00				

Government of Nepal
Ministry of Water Supply
Department of Water Supply and Sewerage Management
Water Supply and Sewerage Management Office
Butwal

Name of Project: Construction of Entire Works of Imiliya Water Supply Project, Buddhabhumi-09, Kapilvastu
Contract ID: 02/083-84/NCB/Works/C/WSSMOBTL

Office Chief

Government of Nepal
Ministry of Infrastructure Development
Department of Water Supply and Sewerage Management
Water Supply and Sewerage Management Office
Butwal, Rupandehi

Priced Bill of Quantities

S.N.	Description of Works	Unit	Quantity	Rate (NRs.)		Amount	Remarks
				In Figures	In Words		
394	Supply, Transportation and Installation of submersible motor pump 825 l/min and Puming Head is 75.09 . The size of pump 6 inch, 25 HP and Pump efficiency is 70%. including accessories all complete work in all respects as per the approved drawings, technical specifications, and as directed by the Engineer	Set	1.00				
395	Supply, Transportation and Installation of submersible motor pump 826 l/min and Puming Head is 720 l/min and Puming Head is 74.30 m m . The size of pump 6 inch, 20 HP and Pump efficiency is 70%. . including accessories all complete work in all respects as per the approved drawings, technical specifications, and as directed by the Engineer	Set	1.00				
396	Supply, Transportation and Installation of submersible motor pump 840 l/min and Puming Head is 60.73 . The size of pump 6 inch, 20 HP and Pump efficiency is 75%. including accessories all complete work in all respects as per the approved drawings, technical specifications, and as directed by the Engineer	Set	1.00				
397	Supply, Transportation and Installation of 840 l/min and Puming Head is 53.13 . The size of pump 6 inch, 20 HP and Pump efficiency is 75%. Or equivalent, submersible motor pump accessories fitted with all complete as per specification, drawings & instructions. including accessories all complete work in all respects as per the approved drawings, technical specifications, and as directed by the Engineer	Set	1.00				
398	Supply, Transportation and Installation of Lightening arrestor system of overhead tank with all complete meeting the requirement of IS/IEC 62305,62561 with all air termination system, down conductor system including accessories all complete work in all respects as per the approved drawings, technical specifications, and as directed by the Engineer	Set	1.00				

Government of Nepal
Ministry of Water Supply
Department of Water Supply and Sewerage Management
Water Supply and Sewerage Management Office
Butwal

Name of Project: Construction of Entire Works of Imiliya Water Supply Project, Buddhabhumi-09, Kapilvastu
Contract ID: 02/083-84/NCB/Works/C/WSSMOBTL

Office Chief

Government of Nepal
Ministry of Infrastructure Development
Department of Water Supply and Sewerage Management
Water Supply and Sewerage Management Office
Butwal, Rupandehi

Priced Bill of Quantities

S.N.	Description of Works	Unit	Quantity	Rate (NRs.)		Amount	Remarks
				In Figures	In Words		
399	Supply, delivery and installation of DI Double Flanged, 45 Deg Bend, Dia 125 mm including accessories all complete work in all respects as per the approved drawings, technical specifications, and as directed by the Engineer.	Nos.	12.00				
400	Supply, delivery and installation of DI Double Flanged Tail Piece 125 mm dia including accessories all complete work in all respects as per the approved drawings, technical specifications, and as directed by the Engineer.	Nos.	24.00				
401	Supply, delivery and installation of DI Flanged Socket, 125 mm including accessories all complete work in all respects as per the approved drawings, technical specifications, and as directed by the Engineer.	Nos.	18.00				
402	Supply, delivery and installation of Flanged Joint, DI pipe, Dia 125 mm including accessories all complete work in all respects as per the approved drawings, technical specifications, and as directed by the Engineer.	Rm	225.00				
403	Supply, delivery and installation of DI Double Flanged Tail Piece 200 mm dia including accessories all complete work in all respects as per the approved drawings, technical specifications, and as directed by the Engineer.	Nos.	6.00				
404	Supply, delivery and installation of DI Flanged Socket, 200 mm including accessories all complete work in all respects as per the approved drawings, technical specifications, and as directed by the Engineer.	Nos.	3.00				
405	Supply, delivery and installation of Flanged Joint, DI pipe, Dia 200 mm including accessories all complete work in all respects as per the approved drawings, technical specifications, and as directed by the Engineer.	Rm	60.00				

Government of Nepal
Ministry of Water Supply
Department of Water Supply and Sewerage Management
Water Supply and Sewerage Management Office
Butwal

Name of Project: Construction of Entire Works of Imiliya Water Supply Project, Buddhabhumi-09, Kapilvastu
Contract ID: 02/083-84/NCB/Works/C/WSSMOBTL

Office Chief

Government of Nepal
Ministry of Infrastructure Development
Department of Water Supply and Sewerage Management
Water Supply and Sewerage Management Office
Butwal, Rupandehi

Priced Bill of Quantities

S.N.	Description of Works	Unit	Quantity	Rate (NRs.)		Amount	Remarks
				In Figures	In Words		
406	Supply, delivery and installation of DI All Flanged Cross, Dia 200 mm including accessories all complete work in all respects as per the approved drawings, technical specifications, and as directed by the Engineer.	Nos.	3.00				
407	Supply, delivery and installation of DI Mechanical Coupling, Dia 200 mm including accessories all complete work in all respects as per the approved drawings, technical specifications, and as directed by the Engineer.	Nos.	6.00				
408	Supply, delivery and installation of GI Pipe 100 mm dia including accessories all complete work in all respects as per the approved drawings, technical specifications, and as directed by the Engineer.	Rm	90.00				
409	Supply, delivery and installation of 150 mm dia. CI Road surface Valve box with key including accessories all complete work in all respects as per the approved drawings, technical specifications, and as directed by the Engineer.	Set	6.00				
410	Supply, delivery and installation of 5 ton capacity CHAINPULLY BLOCK including accessories all complete work in all respects as per the approved drawings, technical specifications, and as directed by the Engineer.	Set	6.00				
411	Supply, delivery and installation of Forzed Steel Nut & bolt (different size) including accessories all complete work in all respects as per the approved drawings, technical specifications, and as directed by the Engineer.	Kg	18.00				
412	Supply, delivery and installation of 3mm thick Gasket liner (Fiber reinforce) including accessories all complete work in all respects as per the approved drawings, technical specifications, and as directed by the Engineer.	Nos.	60.00				

Government of Nepal
Ministry of Water Supply
Department of Water Supply and Sewerage Management
Water Supply and Sewerage Management Office
Butwal

Name of Project: Construction of Entire Works of Imiliya Water Supply Project, Buddhabhumi-09, Kapilvastu
Contract ID: 02/083-84/NCB/Works/C/WSSMOBTL

Office Chief

Government of Nepal
Ministry of Infrastructure Development
Department of Water Supply and Sewerage Management
Water Supply and Sewerage Management Office
Butwal, Rupandehi

Priced Bill of Quantities

S.N.	Description of Works	Unit	Quantity	Rate (NRs.)		Amount	Remarks
				In Figures	In Words		
413	Supply, delivery and installation of 300mm dia ISOD MS Blind Flange (22mm thick) including accessories all complete work in all respects as per the approved drawings, technical specifications, and as directed by the Engineer.	Nos.	6.00				
414	Supply, delivery and installation of Galvanized Iron (GI) column pipe -100 mm @ 3 m long including accessories all complete work in all respects as per the approved drawings, technical specifications, and as directed by the Engineer.	Nos.	90.00				
415	Supply, delivery and installation of Flange Set 125 mm dia including accessories all complete work in all respects as per the approved drawings, technical specifications, and as directed by the Engineer.	Nos.	6.00				
416	Supply, delivery and installation of Flange Set 100 mm dia including accessories all complete work in all respects as per the approved drawings, technical specifications, and as directed by the Engineer.	Nos.	180.00				
417	Supply, delivery and installation of GI Reducer 125 mm x 100 mm including accessories all complete work in all respects as per the approved drawings, technical specifications, and as directed by the Engineer.	Nos.	12.00				
418	Supply, delivery and installation of Cast Iron Non Return Valve (Class 300), DN 125 including accessories all complete work in all respects as per the approved drawings, technical specifications, and as directed by the Engineer.	Nos.	6.00				
419	Supply, delivery and installation of DI Double Flanged, 90 Deg Bend, Dia 125 mm including accessories all complete work in all respects as per the approved drawings, technical specifications, and as directed by the Engineer.	Nos.	6.00				

Government of Nepal
Ministry of Water Supply
Department of Water Supply and Sewerage Management
Water Supply and Sewerage Management Office
Butwal

Office Chief

Government of Nepal
Ministry of Infrastructure Development
Department of Water Supply and Sewerage Management
Water Supply and Sewerage Management Office
Butwal, Rupandehi

Name of Project: Construction of Entire Works of Imiliya Water Supply Project, Buddhabhumi-09, Kapilvastu
Contract ID: 02/083-84/NCB/Works/C/WSSMOBTL

Priced Bill of Quantities

S.N.	Description of Works	Unit	Quantity	Rate (NRs.)		Amount	Remarks
				In Figures	In Words		
428	Procurement, Supply, and Installation of Software and Mobile Application development for the user interface with multiple tabular and data visualization reports, and remotely monitoring system transporation and portaring all complete work as per specification and instruction of engineer	Job	1.00				
429	Procurement, Supply, and Installation of Installation, testing and commisioning of the RTU system transporation and portaring all complete work as per specification and instruction of engineer	Job	1.00				
					Subtotal		
					Total PS		
					Total without PS		
					VAT @13%		
					Total with PS and VAT		

Office Chief

Government of Rwanda
Ministry of Infrastructure
Department of Water Supply and Sewerage Management
Water Supply and Sewerage Management Unit
Butwal, Rwandchi

Part III: CONDITIONS OF CONTRACT AND CONTRACT FORMS

Table of Clauses

Office Chief

A. General **96**

1. Definitions 96
2. Interpretation 98
3. Language and Law 98
4. Contract Agreement 98
5. Assignment 99
6. Care and Supply of Documents 99
7. Confidential Details 99
8. Compliance with Laws 100
9. Joint and Several Liability 100
10. Project Manager's Decisions 100
11. Delegation 100
12. Communications 100
13. Subcontracting 100
14. Other Contractors 101
15 Personnel and Equipment 101
16. Employer's and Contractor's Risk 102
17. Employer's Risks 102
18. Contractor's Risks 102
19. Insurance 102
20. Site Investigation Reports 103
21. Contractor to Construct the Works 103
22. The Works to Be Completed within intended Completion Date 103
23. Design by contractor and Approval by the Project Manager 103
24. Safety, Security and Protection of the Environment 103
25. Discoveries 104
26. Possession of the Site 104
27. Access to the Site 104
28. Instructions, Inspections and Audits 104
29. Dispute Settlement 105
30. Procedures for Disputes 105

B1.Staff and Labor **105**

31. Forced Labor 105
32. Child Labor 105
33.Non-discrimination and Equal Opportunity 105

Office Chief

B. Time Control **105**

34. Program 105
35. Extension of the Intended Completion Date 106
36. Acceleration 106
37. Delays Ordered by the Project Manager 107
38. Management Meetings 107
39. Early Warning 107

C. Quality Control **107**

40. Identifying Defects 107
41. Tests 107
42. Correction of Defects 107
43. Uncorrected Defects 108

D. Cost Control **108**

44. Contract Price 108
45. Changes in the Contract Price 108
46. Variations 108
47. Cash Flow Forecasts 109
48. Payment Certificates 109
49. Payments 109
50. Compensation Events 110
51. Tax 111
52. Currency 111
53. Price Adjustment 111
54. Retention 113
55. Liquidated Damages 113
56. Bonus 113
57. Advance Payment 113
58. Securities 114
59. Dayworks 114
60. Cost of Repairs 115

F. Force Majeure **115**

61. Definition of Force Majeure 115
62. Notice of Force Majeure 115
63. Duty to Minimize Delay 116
64. Consequences of Force Majeure 116
65. Force Majeure Affecting Subcontractor 116

Office Chief

66. Optional Termination, Payment and Release 116
67. Release from Performance 117
G. Finishing the Contract 117
68. Completion 117
69. Taking Over 117
70. Final Account 118
71. Operating and Maintenance Manuals 118
72. Termination 118
73. Fraud and Corruption 119
74. Black Listing 120
75. Payment upon Termination 120
76. Property 121
77. Release from Performance 121
78.Suspension of DP Loan/Credit/ Grant 121
79. Eligibility 121
80. Project Manager's Duties and Authorities 121
81. Quarries and Spoil Dumps 122
82. Local Taxation 122
83. Value Added Tax 122
84. Income Taxes on Staff 122
85. Duties, Taxes and Royalties 122
86. Member of Government, etc, not Personally Liable 122
87. Approval of Use of Explosives 123
88 Compliance with Regulations for Explosives 123
89. Permission for Blasting 123
90. Records of Explosives 123
91.Traffic Diversion 123
92. Social Security Fund 123

Section VIII: General Conditions of Contract

Office Chief

Water Supply and Sewerage Management Office, Butwal

Name of Project: Construction of Entire Works of Imiliya Water Supply Project, Buddhabhumi-09, Kapilvastu

Contract Identification No.:

02/083-84/NCB/Works/C/WSSMOBTL

Office Chief

General Conditions of Contract

This Section provides the General Conditions of Contract that will apply to the Contract for which the Biding document is issued.

A. General	
1. Definitions	1.1 Boldface type is used to identify defined terms. (a) The **Accepted Contract Amount** means the amount accepted in the Letter of Acceptance for the execution and completion of the Works and the remedying of any defects. (b) The **Activity Schedule** is a schedule of the activities comprising the construction, installation, testing, and commissioning of the Works in a lump sum contract. It includes a lump sum price for each activity, which is used for valuations and for assessing the effects of Variations and Compensation Events. (c) **Bill of Quantities** means the priced and completed Bill of Quantities forming part of the Bid. (d) **Compensation Events** are those defined in GCC 50 hereunder. (e) The **Completion Date** is the date of completion of the Works as certified by the Project Manager, in accordance with GCC 68.1. (f) The **Contract** is the Contract between the Employer and the Contractor to execute, complete, and maintain the Works. It consists of the documents listed in GCC 2.3 below. (g) The **Contractor** is the party whose Bid to carry out the Works has been accepted by the Employer. (h) The **Contractor's Bid** is the completed bidding document submitted by the Contractor to the Employer. (i) The **Contract Price** is the Accepted Contract Amount stated in the Letter of Acceptance and thereafter as adjusted in accordance with the Contract. (j) **Days** are calendar days; months are calendar-months. (k) **Dayworks** are varied work inputs subject to payment on a time basis for the Contractor's employees and Equipment, in addition to payments for associated Materials and Plant. (l) A **Defect** is any part of the Works not completed in accordance with the Contract. (m) The **Defects Liability Certificate** is the certificate issued by Project Manager upon correction of defects by the Contractor. (n) The **Defects Liability Period** is the period calculated from the Completion Date where the Contractor remains responsible for remedying defects. (o) **Drawings** include calculations and other information provided or approved by the Project Manager for the execution of the Contract. (p) The **Employer** is the party who employs the Contractor to carry out the Works, as **specified in the SCC**. (q) **Equipment** is the Contractor's machinery and vehicles brought

Office Chief

temporarily to the Site to construct the Works.

(r) **Force Majeure** means an exceptional event or circumstance: which is beyond a Party's control; which such Party could not reasonably have provided against before entering into the Contract; which, having arisen, such Party could not reasonably have avoided or overcome; and, which is not substantially attributable to the other Party.

(s) The **Initial Contract Price** is the Contract Price listed in the Employer's Letter of Acceptance.

(t) **In writing** or **written** means hand written, type written, printed or electronically made, and resulting in permanent record.

(u) The **Intended Completion Date** is the date on which it is intended that the Contractor shall complete the Works. The Intended Completion Date is **specified in the SCC**. The Intended Completion Date may be revised only by the Project Manager by issuing an extension of time or an acceleration order.

(v) **Letter of Acceptance** means the formal acceptance by the Employer of the Bid and denotes the formation of the contract at the date of acceptance.

(w) **Materials** are all supplies, including consumables, used by the Contractor for incorporation in the Works.

(x) **Party** means the Employer or the Contractor, as the context requires.

(y) **SCC** means Special Conditions of Contract

(aa) **Plant** is any integral part of the Works that shall have a mechanical, electrical, chemical, or biological function.

(bb) The **Project Manager** is the person **named in the SCC** (or any other competent person appointed by the Employer and notified to the Contractor, to act in replacement of the Project Manager) who is responsible for supervising the execution of the Works and administering the Contract.

(cc) **Retention Money** means the aggregate of all monies retained by the Employer pursuant to GCC 54.1.

(dd) **Schedules** means the document(s) entitled schedules, completed by the Contractor and submitted with the Letter of Bids, as included in the Contract. Such document may include the Bill of Quantities, data, lists, and schedules of rates and/or prices.

(ee) The **Site** is the area defined as such in the SCC

(ff) **Site Investigation Reports** are those that were included in the bidding documents and are factual and interpretative reports about the surface and subsurface conditions at the Site.

(gg) **Specification** means the Specification of the Works included in the Contract and any modification or addition made or approved by the Project Manager.

(hh) The **Start Date** is given **in the SCC**. It is the latest date when the Contractor shall commence execution of the Works. It does not necessarily coincide with any of the Site Possession Dates.

(ii) A **Subcontractor** is a person or corporate body who has a Contract with

Office Chief

	the Contractor to carry out a part of the work in the Contract, which includes work on the Site. (jj) **Temporary Works** are works designed, constructed, installed, and removed by the Contractor that are needed for construction or installation of the Works. (kk) A **Variation** is an instruction given by the Project Manager which varies the Works. (ll) The **Works** are what the Contract requires the Contractor to construct, install, and turn over to the Employer, as **defined in the SCC**.
2. Interpretation	2.1 In interpreting these GCC, singular also means plural, male also means female or neuter, and the other way around. Headings have no significance. Words have their normal meaning under the language of the Contract unless specifically defined. The Project Manager shall provide instructions clarifying queries about these GCC.
	2.2 If sectional completion is **specified in the SCC**, references in the GCC to the Works, the Completion Date, and the Intended Completion Date apply to any Section of the Works (other than references to the Completion Date and Intended Completion Date for the whole of the Works).
	2.3 The documents forming the Contract shall be interpreted in the following order of priority: (a) Contract Agreement, (b) Letter of Acceptance, (c) Letters of Technical Bid and Price Bid, (d) Special Conditions of Contract, (e) General Conditions of Contract, (f) Specifications, (g) Drawings, (h) Bill of Quantities (or Schedules of Prices for lump sum contracts), and (i) Any other document **listed in the SCC** as forming part of the Contract.
3. Language and Law	3.1 The language of the Contract and the law governing the Contract are **stated in the SCC**.
	3.2. Throughout the execution of the Contract, the Contractor shall comply with the import of goods and services prohibitions in the Employer's country when (a) by an act of compliance with a decision of the United Nations Security Council taken under Chapter VII of the Charter of the United Nations, the Employer's Country prohibits any import of goods from, or any payments to, a particular country, person, or entity. Where the employer's country prohibits payments to a particular firm or for particular goods by such an act of compliance, that firm may be excluded.
4. Contract Agreement	4.1 The Parties shall enter into a Contract Agreement within 15 days after the Contractor receives the Letter of Acceptance, unless the Special Conditions establish otherwise. The Contract Agreement shall be based upon the attached Contract forms in Section X.

Office Chief

	4.2 Without altering the basic nature or scope of work, the contract may be amended upon mutual written consent as per prevailing Public Procurement Law.
5. Assignment	5.1 Neither Party shall assign the whole or any part of the Contract or any benefit or interest in or under the Contract. However, either Party (a) may assign the whole or any part with the prior agreement of the other Party, at the sole discretion of such other Party; and (b) may, as security in favor of a bank or financial institution, assign its right to any moneys due, or to become due, under the Contract.
6. Care and Supply of Documents	6.1 The Specification and Drawings shall be in the custody and care of the Employer. Unless otherwise stated in the Contract, one copy of the Contract and of each subsequent Drawing shall be supplied to the Contractor, who may make or request further copies at the cost of the Contractor.
	6.2 Each of the Contractor's Documents shall be in the custody and care of the Contractor, unless and until taken over by the Employer. Unless otherwise stated in the Contract, the Contractor shall supply to the Engineer six copies of each of the Contractor's Documents.
	6.3 The Contractor shall keep, on the Site, a copy of the Contract, publications named in the Specification, the Contractor's Documents (if any), the Drawings and Variations and other communications given under the Contract. The Employer's Personnel shall have the right of access to all these documents at all reasonable times.
	6.4 If a Party becomes aware of an error or defect in a document which was prepared for use in executing the Works, the Party shall promptly give notice to the other Party of such error or defect.
7. Confidential Details	7.1 The Contractor's and the Employer's Personnel shall disclose all such confidential and other information as may be reasonably required in order to verify the Contractor's compliance with the Contract and allow its proper implementation.
	7.2 Each of them shall treat the details of the Contract as private and confidential, except to the extent necessary to carry out their respective obligations under the Contract or to comply with applicable Laws. Each of them shall not publish or disclose any particulars of the Works prepared by the other Party without the previous agreement of the other Party. However, the Contractor shall be permitted to disclose any publicly available information, or information otherwise required to establish his qualifications to compete for other projects.
	7.3 Notwithstanding the above, the Contractor may furnish to its Subcontractor(s) such documents, data and other information it receives from the Employer to the extent required for the Subcontractor(s) to perform its work under the Contract, in which event the Contractor shall obtain from such Subcontractor(s) an undertaking of confidentiality similar to that imposed on the Contractor under this Clause.

Office Chief

8. Compliance with Laws	8.1 The Contractor shall, in performing the Contract, comply with applicable Laws of Nepal.
9. Joint and Several Liability	9.1 If the Contractor is a joint venture of two or more entities, all such entities shall be jointly and severally liable to the Employer for the fulfillment of the provisions of the Contract, and shall designate one of such persons to act as a leader with authority to bind the joint venture. The contractor shall not handover the responsibility of the contract to any one member or some members of Joint Venture or any other parties, not involved in the contract. The composition or the constitution of the joint venture shall not be altered without the prior consent of the Employer.
10. Project Manager's Decisions	10.1 Except where otherwise specifically stated, the Project Manager shall decide contractual matters between the Employer and the Contractor in the role representing the Employer.
11. Delegation	11.1 The Project Manager may delegate any of his duties and responsibilities to other people after notifying the Contractor, and may cancel any delegation after notifying the Contractor.
12. Communications	12.1 Communications between parties that are referred to in the Conditions shall be effective only when in writing. Wherever these Conditions provide for the giving or issuing of approvals, certificates, consents, determinations, notices and requests, these communications shall be: (a) in writing and delivered by hand (against receipt), sent by mail or courier, or transmitted using any of the agreed systems of electronic transmission as **stated in the SCC**; and (b) delivered, sent or transmitted to the address for the recipient's communications as stated in the Contract. However: (i) if the recipient gives notice of another address, communications shall thereafter be delivered accordingly; and (ii) if the recipient has not stated otherwise when requesting an approval or consent, it may be sent to the address from which the request was issued. Approvals, certificates, consents and determinations shall not be unreasonably withheld or delayed.
	12.2 A Notice shall be effective when delivered or on the Notice's effective date, whichever is later.
13. Subcontracting	13.1 **For GON Funded:** A list of approved Subcontractors including its value/works is included as Article 2 (k) of Contract Agreement Approval by the Employer for any of the Subcontractors shall not relieve the Contractor from any of its obligations, duties, or responsibilities under the contract. **For DP Funded:** The Contractor may subcontract with the approval of the Project Manager, but may not assign the Contract without the approval of the Employer in writing. Subcontracting shall not alter the Contractor's obligations. Bidders may propose subcontracting up to the percentage of

	total value of contracts as specified in the SCC. The Sub contractor shall meet the qualification requirement as specified **in SCC.** 13.2 The contractor shall give prior notice to the Employer clearly specifying the nature, scope, and responsibilities of the work to be performed, to engage other subcontractors, material suppliers, equipment suppliers, service providers, or other persons or entities during the implementation of the contract. 13.3 Before notifying the Employer as per GCC 13.2, the contractor shall enter into a written agreement with the subcontractors, material suppliers, equipment suppliers, service providers, or other persons or entities clearly specifying the scope of work, responsibilities, quality requirements, duration, payment terms, security, labor-related obligations, and conditions relating to performance of the work. 13.4 Any subcontracting arrangement made in accordance with GCC 13.2 shall not relieve the Contractor of any of its obligations or liabilities under the Contract. 13.5 The contractor shall provide the Employer with details of the payments made to the subcontractors, material suppliers, equipment suppliers, service providers, or other persons or entities engaged under GCC 13.1 and/or GCC 13.2. 13.6 If the contractor is found not to have made payment to the subcontractor, material suppliers, equipment suppliers, service providers, or other persons or entities engaged under GCC 13.1 and/or GCC 13.2 in accordance with the terms of the agreement, the Employer may determine the amount payable to such subcontractor, material suppliers, equipment suppliers, service providers, or other persons or entities and make payment to them from any remaining dues to be paid to the contractor, retention money, or forfeited performance security.
14. Other Contractors	14.1 The Contractor shall cooperate and share the Site with other contractors, public authorities, utilities, and the Employer between the dates given in the Schedule of Other Contractors, **as referred to in the SCC**. The Contractor shall also provide facilities and services for them as described in the Schedule. The Employer may modify the Schedule of Other Contractors, and shall notify the Contractor of any such modification
15 Personnel and Equipment	15.1 The Contractor shall employ the key personnel and use the equipment identified in its Bid to carry out the Works, or other personnel and equipment approved by the Project Manager. The Project Manager shall approve any proposed replacement of key personnel and equipment only if their relevant qualifications or characteristics are substantially equal to or better than those proposed in the Bid.
	15.2 If the Project Manager asks the Contractor to remove a person who is a member of the Contractor's staff or work force, stating the reasons, the Contractor shall ensure that the person leaves the Site within seven days and has no further connection with the work in the Contract.
	15.3 If the Employer, Project Manager, or Contractor determines, that any employee of the Contractor be determined to have engaged in corrupt, fraudulent, collusive, coercive, or other prohibited practices during the

Office Chief

	execution of the Works, then that employee shall be removed in accordance with Clause 15.2 above.
16. Employer's and Contractor's Risk	16.1 The Employer carries the risks which this Contract states are Employer's risks, and the Contractor carries the risks which this Contract states are Contractor's risks.
17. Employer's Risks	17.1 From the Start Date until the Defects Liability Certificate has been issued, the following are Employer's risks: (a) The risk of personal injury, death, or loss of or damage to property (excluding the Works, Plant, Materials, and Equipment), which are due to (i) use or occupation of the Site by the Works or for the purpose of the Works, which is the unavoidable result of the Works or (ii) negligence, breach of statutory duty, or interference with any legal right by the Employer or by any person employed by or contracted to him except the Contractor. (b) The risk of damage to the Works, Plant, Materials, and Equipment to the extent that it is due to a fault of the Employer or in the Employer's design, or due to war or radioactive contamination directly affecting the country where the Works are to be executed.
	17.2 From the Completion Date until the Defects Liability Certificate has been issued, the risk of loss of or damage to the Works, Plant, and Materials is an Employer's risk except loss or damage due to (a) a Defect which existed on the Completion Date, (b) an event occurring before the Completion Date, which was not itself an Employer's risk, or (c) the activities of the Contractor on the Site after the Completion Date.
18. Contractor's Risks	18.1 From the Starting Date until the Defects Liability Certificate has been issued, the risks of personal injury, death, and loss of or damage to property (including, without limitation, the Works, Plant, Materials, and Equipment) which are not Employer's risks are Contractor's risks.
19. Insurance	19.1 The Contractor shall provide insurance in the joint names of the Employer and the Contractor from the Start Date to the end of the Defects Liability Period, in the amounts and deductibles **stated in the SCC** for the following events which are due to the Contractor's risks: (a) loss of or damage to the Works, Plant, and Materials; (b) loss of or damage to Equipment; (c) loss of or damage to property (except the Works, Plant, Materials, and Equipment) in connection with the Contract; and (d) Personal injury or death.
	19.2 Policies and certificates for insurance shall be delivered by the Contractor to the Project Manager for the Project Manager's approval before the Start Date. All such insurance shall provide for compensation to be payable in the

Office Chief

	proportions of Nepalese Rupees required to rectify the loss or damage incurred.
	19.3 If the Contractor does not provide any of the policies and certificates required, the Employer may affect the insurance which the Contractor should have provided and recover the premiums the Employer has paid from payments otherwise due to the Contractor or, if no payment is due, the payment of the premiums shall be a debt due.
	19.4 Alterations to the terms of insurance shall not be made without the approval of the Project Manager.
	19.5 Both parties shall comply with any conditions of the insurance policies.
20. Site Investigation Reports	20.1 The Contractor, in preparing the Bid, shall rely on any Site Investigation Reports referred to **in the SCC**, supplemented by any information available to the Contractor.
21. Contractor to Construct the Works	21.1 The Contractor shall construct and install the Works in accordance with the Specifications and Drawings.
22. The Works to Be Completed within intended Completion Date	22.1 The Contractor may commence execution of the Works on the Start Date and shall carry out the Works in accordance with the Program submitted by the Contractor, as updated with the approval of the Project Manager, and complete them within the intended Completion Date.
23. Design by contractor and Approval by the Project Manager	23.1 The contractor shall be responsible for the design of permanent works as **specified in SCC**.
	23.2 Contractor shall be responsible for design of the Temporary Works. The Contractor shall submit Specifications and Drawings showing the proposed Temporary Works to the Project Manager, for his approval.
	23.3 All Drawings prepared by the Contractor for the execution of the temporary or permanent Works, shall be subject to prior approval by the Project Manager before their use.
	23.4 The Project Manager's approval shall not alter the Contractor's responsibility for design of temporary works.
24. Safety, Security and Protection of the Environment	24.1 The Contractor shall, throughout the execution, and completion of the works and remedying of any defects therein: a. Have full regard for the safety of all persons entitled to be upon the site and keep the site (so as the same is under his control) and the works (so far as the same are not completed or occupied by the Employer) in an orderly state appropriate to the avoidance of danger to such persons. b. Provide and maintain at his own cost all lights, guards, fencing, warning signs and watching, when necessary or required by the Project Manager or by any duly constituted authority, for the protection of the Works of for the

Office Chief

	safety and convenience of the public or others. c. Take all reasonable steps to protect the environment on and off the site and to avoid damage or nuisance to persons or to property of the public or others resulting from pollution, noise or other causes arising as a consequence of his methods of operation. d. Ensure that any cut or fill slopes are planted in grass or other plant cover as soon as possible to protect them from erosion. e. Any spoil or material removed from drains shall be disposed of to designated stable tipping areas as directed by the Project Manager. f. Shall not use fuel wood as a means of heating during the processing or preparation of any materials forming part of the works. g. The Project Manager shall have the power to disallow any working practice or activity of the Contractor or direct that such practices or activities be modified should the Project Manager consider, on the advice of the relevant Government Departments, that the practices or activities will be harmful to wildlife. h. Provide on the Site such lifesaving apparatus as may be appropriate and an adequate and easily accessible first aid outfit or such outfits as may be required by any government ordinance, factory act, etc., subsequently published and amended from time to time.
	24.2 The Contractor shall comply with the Employer's Occupational Health and Safety (OHS) Policy, Guideline and/or Operating Manual, if any, **as specified in the SCC.**
25. Discoveries	25.1 Anything of historical or other interest or of significant value unexpectedly discovered on the Site shall be the property of the employer. The Contractor shall notify the Project Manager of such discoveries and carry out the Project Manager's instructions for dealing with them.
26. Possession of the Site	26.1 The Employer shall give possession of all parts of the Site to the Contractor. If possession of a part is not given by the date **stated in the SCC**, the Employer shall be deemed to have delayed the start of the relevant activities, and this shall be a Compensation Event.
27. Access to the Site	27.1 The Contractor shall allow the Project Manager and any person authorized by the Project Manager access to the Site and to any place where work in connection with the Contract is being carried out or is intended to be carried out.
28. Instructions, Inspections and Audits	28.1 The Contractor shall carry out all instructions of the Project Manager which comply with the applicable laws where the Site is located.
	28.2 The Contractor shall keep, and shall make all reasonable efforts to cause its Subcontractors and sub consultants to keep accurate and systematic accounts and records in respect of the Works in such form and details as will clearly identify relevant time changes and costs.
	28.3 The Contractor shall permit the GoN/DP and/or persons appointed by the GoN/DP to inspect the Site and/or the accounts and records of the Contractor and its sub-contractors relating to the performance of the Contract, and to have such accounts and records audited by auditors appointed by the GoN/DP if required by the GoN/DP. The Contractor's attention is drawn to Sub-Clause 73.2 which provides, inter alia, that acts intended to materially impede the

	exercise of the GoN's/DP's inspection and audit rights provided for under this Sub-Clause constitute a obstructive practice subject to contract termination.
29. Dispute Settlement	29.1 The Employer and the Contractor shall attempt to settle amicably by direct negotiation any disagreement or dispute arising between them under or in connection with the Contract.
	29.2 Any dispute between the Parties as to matters arising pursuant to this Contract which cannot be settled amicably within thirty (30) days after receipt by one Party of the other Party 's request for such amicable settlement may be referred to Arbitration within 30 days after the expiration of amicable settlement period.
30. Procedures for Disputes	30.1 In case of arbitration, the arbitration shall be conducted in accordance with the arbitration procedures in accordance with law of Nepal at the place within the territory of Nepal **given in the SCC**.
B1. Staff and Labor	
31. Forced Labor	31.1 The Contractor shall not employ forced labor, which consists of any work or service, not voluntarily performed, that is exacted from an individual under threat of force or penalty. This covers any kind of involuntary or compulsory labor, such as indentured labor, bonded labor, or similar labor–contracting arrangements.
32. Child Labor	32.1 The Contractor shall not employ children in a manner that is economically exploitative, or is likely to be hazardous, or to interfere with, the child's education, or to be harmful to the child's health or physical, mental, spiritual, moral, or social development. Where national laws have provisions for employment of minors, the Contractor shall follow those laws applicable to the Contractor. Children below the age of 18 years shall not be employed in dangerous work.
33.Non-discrimination and Equal Opportunity	33.1 The Contractor shall not make employment decisions on the basis of personal characteristics unrelated to inherent job requirements. The Contractor shall base the employment relationship on the principle of equal opportunity and fair treatment, and shall not discriminate with respect to aspects of the employment relationship, including recruitment and hiring, compensation (including wages and benefits), working conditions and terms of employment, access to training, promotion, termination of employment or retirement, and discipline. In countries where national law provides for non-discrimination in employment, the Contractor shall comply with national law. When national laws are silent on nondiscrimination in employment, the Contractor shall meet this Sub clause's requirements. Special measures of protection or assistance to remedy past discrimination or selection for a particular job based on the inherent requirements of the job shall not be deemed discrimination.
B. Time Control	
34. Program	34.1 Within the time **stated in the SCC**, after the date of the Letter of Acceptance, the Contractor shall submit to the Project Manager for approval a Program showing the general methods, arrangements, order, and timing for all the activities in the Works. In the case of a lump sum contract, the activities in the Program shall be consistent with those in the Activity Schedule.
	34.2 An update of the Program shall be a program showing the actual progress

Office Chief

	achieved on each activity and the effect of the progress achieved on the timing of the remaining work, including any changes to the sequence of the activities.
	34.3 The Contractor shall submit to the Project Manager for approval an updated Program at intervals no longer than the period **stated in the SCC**. If the Contractor does not submit an updated Program within this period, the Project Manager may withhold the amount **stated in the SCC** from the next payment certificate and continue to withhold this amount until the next payment after the date on which the overdue Program has been submitted. In the case of a lump sum contract, the Contractor shall Provide an updated Activity Schedule within 15 days of being instructed to by the Project Manager.
	34.4 The Project Manager's approval of the Program shall not alter the Contractor's obligations. The Contractor may revise the Program and submit it to the Project Manager again at any time. A revised Program shall show the effect of Variations and Compensation Events.
35. Extension of the Intended Completion Date	35.1 The Project Manager shall extend the Intended Completion Date if a Compensation Event occurs or a Variation is issued which makes it impossible for Completion to be achieved by the Intended Completion Date without the Contractor taking steps to accelerate the remaining work, which would cause the Contractor to incur additional cost.
	35.2 The Project Manager shall decide whether and by how much to extend the Intended Completion Date within 21 days of the Contractor asking the Project Manager for a decision upon the effect of a Compensation Event or Variation and submitting full supporting information at least 21 days prior to the intended completion date. If the Contractor has failed to give early warning of a delay or has failed to cooperate in dealing with a delay, the delay by this failure shall not be considered in assessing the new Intended Completion Date. Along with full supporting information, the contractor shall also submit a revised work schedule and ensure that the Performance Security, Insurance, and Advance Payment Security (if any) remain valid. The contractor shall submit Performance Security, Advanced Payment Guarantee (if any) and Insurance Policy documents, as required with extended validity, within fifteen (15) days of receiving the Letter of Extension of Intended Completion Date from the Employer.
	35.3 If the contractor fails to submit Performance Security, Advanced Payment Guarantee (if any) and Insurance Policy documents, as required with extended validity within the prescribed time as per GCC 35.2, the Contractor shall pay a fine at the rate of 0.01% of the final contract price (without VAT but including PS) per day for a maximum of fifteen (15) days. The Employer may deduct the fine from payments due to the Contractor.
36. Acceleration	36.1 When the Employer wants the Contractor to finish before the Intended Completion Date, the Project Manager shall obtain priced proposals for achieving the necessary acceleration from the Contractor. If the Employer accepts these proposals, the Intended Completion Date shall be adjusted accordingly and confirmed by both the Employer and the Contractor.
	36.2 If the Contractor's priced proposals for acceleration are accepted by the Employer, they are incorporated in the Contract Price and treated as a Variation.

Office Chief

37. Delays Ordered by the Project Manager	37.1 The Project Manager may instruct the Contractor to delay the start or progress of any activity within the Works.
38. Management Meetings	38.1 Either the Project Manager or the Contractor may require the other to attend a management meeting. The business of a management meeting shall be to review the plans for remaining work and to deal with matters raised in accordance with the early warning procedure.
	38.2 The Project Manager shall record the business of management meetings and provide copies of the record to those attending the meeting and to the Employer. The responsibility of the parties for actions to be taken shall be decided by the Project Manager either at the management meeting or after the management meeting and stated in writing to all who attended the meeting.
39. Early Warning	39.1 The Contractor shall warn the Project Manager at the earliest opportunity of specific likely future events or circumstances that may adversely affect the quality of the work, increase the Contract Price, or delay the execution of the Works. The Project Manager may require the Contractor to provide an estimate of the expected effect of the future event or circumstance on the Contract Price and Completion Date. The estimate shall be provided by the Contractor as soon as reasonably possible.
	39.2 The Contractor shall cooperate with the Project Manager in making and considering proposals for how the effect of such an event or circumstance can be avoided or reduced by anyone involved in the work and in carrying out any resulting instruction of the Project Manager.
C. Quality Control	
40.Identifying Defects	40.1 The Project Manager shall check the Contractor's work and notify the Contractor of any Defects that are found. Such checking shall not affect the Contractor's responsibilities. The Project Manager may instruct the Contractor to search for a Defect and to uncover and test any work that the Project Manager considers may have a Defect.
41. Tests	41.1 If the Project Manager instructs the Contractor to carry out a test not specified in the Specification to check whether any work has a Defect and the test shows that it does, the Contractor shall pay for the test and any samples. If there is no Defect, the test shall be a Compensation Event.
42. Correction of Defects	42.1 The Project Manager shall give notice to the Contractor of any Defects before the end of the Defects Liability Period, which begins at_issuance of taking over certificate pursuant to GCC clause 69.2, and is **defined in the SCC**. The Defects Liability Period shall be extended for as long as Defects remain to be corrected.
	42.2 Every time notice of a Defect is given, the Contractor shall correct the notified Defect within the length of time specified by the Project Manager's notice.

Office Chief

43.Uncorrected Defects	43.1 If the Contractor has not corrected a Defect within the time specified in the Project Manager's notice, the Project Manager shall assess the cost of having the Defect corrected, and the Contractor shall pay this amount.
D. Cost Control	
44. Contract Price	44.1 In the case of a Unit Rate contract, the Bill of Quantities shall contain priced items for the Works to be performed by the Contractor. The Bill of Quantities is used to calculate the Contract Price. The Contractor will be paid for the quantity of the work accomplished at the rate in the Bill of Quantities for each item.
	44.2 In the case of a lump sum contract, the Activity Schedule shall contain the priced activities for the Works to be performed by the Contractor. The Activity Schedule is used to monitor and control the performance of activities on which basis the Contractor will be paid. If payment for Materials on Site shall be made separately, the Contractor shall show delivery of Materials to the Site separately on the Activity Schedule.
45. Changes in the Contract Price	45.1 In the case of a Unit Rate contract: (a) If the final quantity of the work done differs from the quantity in the Bill of Quantities for the particular item by more than 25 percent, provided the change exceeds 2 percent of the Initial Contract Price, the Project Manager shall adjust the rate to allow for the change. (b) If requested by the Project Manager, the Contractor shall provide the Project Manager with a detailed cost breakdown of any rate in the Bill of Quantities.
	45.2 In the case of a lump sum contract, the Activity Schedule shall be amended by the Contractor to accommodate changes of Program or method of working made at the Contractor's own discretion. Prices in the Activity Schedule shall not be altered when the Contractor makes such changes to the Activity Schedule.
46. Variations	46.1 All Variations shall be included in updated Programs, and, in the case of a lump sum contract, also in the Activity Schedule, produced by the Contractor.
	46.2 The Contractor shall provide the Project Manager with a quotation for carrying out the Variation when requested to do so by the Project Manager. The Project Manager shall assess the quotation, which shall be given within seven (7) days of the request or within any longer period stated by the Project Manager and before the Variation is ordered.
	46.3 If the Contractor's quotation is unreasonable, the Project Manager may order the Variation and make a change to the Contract Price, which shall be based on the Project Manager's own forecast of the effects of the Variation on the Contractor's costs.
	46.4 If the Project Manager decides that the urgency of varying the work would prevent a quotation being given and considered without delaying the work, no quotation shall be given and the Variation shall be treated as a Compensation Event.
	46.5 The Contractor shall not be entitled to additional payment for costs that could have been avoided by giving early warning.

Office Chief

	46.6 In the case of a Unit Rate contract, if the work in the Variation corresponds to an item description in the Bill of Quantities and if, in the opinion of the Project Manager, the quantity of work above the limit stated in **GCC 45.1** or the timing of its execution do not cause the cost per unit of quantity to change, the rate in the Bill of Quantities shall be used to calculate the value of the Variation. If the cost per unit of quantity changes, or if the nature or timing of the work in the Variation does not correspond with items in the Bill of Quantities, the quotation by the Contractor shall be in the form of new rates for the relevant items of work.
47. Cash Flow Forecasts	47.1 When the Program, or, in the case of a lump sum contract, the Activity Schedule, is updated, the Contractor shall provide the Project Manager with an updated cash flow forecast.
48. Payment Certificates	48.1 The Contractor shall submit to the Project Manager monthly statements of the estimated value of the work executed less the cumulative amount certified previously.
	48.2 The Project Manager shall check the Contractor's monthly statement and certify the amount to be paid to the Contractor within 30 days of submission by contractor.
	48.3 The value of work executed shall be determined by the Project Manager.
	48.4 The value of work executed shall comprise: (a) In the case of a Unit Rate contract, the value of the quantities of work in the Bill of Quantities that have been completed; or (b) In the case of a lump sum contract, the value of work executed shall comprise the value of completed activities in the Activity Schedule.
	48.5 The value of work executed shall include the valuation of Variations and Compensation Events.
	48.6 The Project Manager may exclude any item certified in a previous certificate or reduce the proportion of any item previously certified in any certificate in the light of later information.
49. Payments	49.1 Payments shall be adjusted for deductions for advance payments and retention. The Employer shall pay the Contractor the amounts certified by the Project Manager within 30 days of the date of each certificate. If the Employer makes a late payment, the Contractor shall be paid interest as **indicated in the SCC** on the late payment in the next payment. Interest shall be calculated from the date by which the payment should have been made up to the date when the late payment is made.
	49.2 If an amount certified is increased in a later certificate or as a result of an award by an Arbitrator, the Contractor shall be paid interest upon the delayed payment as set out in this clause. Interest shall be calculated from the date upon which the increased amount would have been certified in the absence of dispute.
	49.3 Items of the Works for which no rate or price has been entered in BOQ shall not be paid for by the Employer and shall be deemed covered by other rates and

Office Chief

	prices in the Contract.
50. Compensation Events	50.1 The following shall be Compensation Events: (a) The Employer does not give access to a part of the Site by the Site Possession Date pursuant to GCC 26.1. (b) The Employer modifies the Schedule of Other Contractors in a way that affects the work of the Contractor under the Contract. (c) The Project Manager orders a delay or does not issue Drawings, Specifications, or instructions required for execution of the Works on time. (d) The Project Manager instructs the Contractor to uncover or to carry out additional tests upon work, which is then found to have no Defects. (e) The Project Manager unreasonably does not approve a subcontract to be let. (f) Ground conditions are substantially more adverse than could reasonably have been assumed before issuance of the Letter of Acceptance from the information issued to bidders (including the Site Investigation Reports), from information available publicly and from a visual inspection of the Site. (g) The Project Manager gives an instruction for dealing with an unforeseen condition, caused by the Employer, or additional work required for safety or other reasons. (h) Other contractors, public authorities, utilities, or the Employer does not work within the dates and other constraints stated in the Contract, and they cause delay or extra cost to the Contractor. (i) The advance payment is delayed. (j) The effects on the Contractor of any of the Employer's Risks. (k) The Project Manager unreasonably delays issuing a Certificate of Completion.
	50.2 If a Compensation Event would cause additional cost or would prevent the work being completed before the Intended Completion Date, the Contract Price shall be increased and/or the Intended Completion Date shall be extended. The Project Manager shall decide whether and by how much the Contract Price shall be increased and whether and by how much the Intended Completion Date shall be extended.
	50.3 As soon as information demonstrating effect of each Compensation Event upon the Contractor's forecast cost has been provided by the Contractor, it shall be assessed by the Project Manager, and the Contract Price shall be adjusted accordingly. If the Contractor's forecast is deemed unreasonable, the Project Manager shall adjust the Contract Price based on the Project Manager's own forecast. The Project Manager shall assume that the Contractor shall react competently and promptly to the event.
	50.4 The Contractor shall not be entitled to compensation to the extent that the Employer's interests are adversely affected by the Contractor's not having given early warning or not having cooperated with the Project

Office Chief

	Manager.
51. Tax	51.1 The Project Manager shall adjust the Contract Price if taxes, duties, and other levies are changed between the date 30 days before the submission of bids for the Contract and the date of the last Completion certificate. The adjustment shall be the change in the amount of tax payable by the Contractor, provided such changes are not already reflected in the Contract Price or are a result of GCC 53.
52. Currency	52.1 The currency of Contracts shall be Nepalese Rupees.
53. Price Adjustment	53.1 Prices shall be adjusted for fluctuations in the cost of inputs only if provided for **in the SCC**. If so provided, the amounts certified in each payment certificate, before deducting for Advance Payment, shall be adjusted by applying the respective price adjustment factor to the payment amounts due.
	53.2 Adjustment Formulae[10]: The formulae will be of the following general type: $$pn = A + b\frac{Ln}{Lo} + c\frac{Mn}{Mo} + d\frac{En}{Eo} + etc.$$ Where: *pn* is a price adjustment factor to be applied to the amount for the payment of the work carried out in the subject month, determined in accordance with Clause 49; *A* is a constant, specified in the Bidding Forms- Table of Price Adjustment data, representing the nonadjustable portion in contractual payments;[11] b, c, d, etc., coefficients representing the estimated proportion of each cost element (labor, materials, equipment usage, etc.) in the Works or sections thereof, net of Provisional Sums, **as specified in the SCC;** *Ln, Mn, En,* etc., are the current cost indices or reference prices of the cost elements for month "n," determined pursuant to Sub-Clause 53.4, applicable to each cost element; and *Lo, Mo, Eo,* etc., are the base cost indices or reference prices corresponding to the above cost elements at the date specified in Sub-Clause 53.4.
	53.3 Sources of Indices and Weightings: The sources of indices shall be those listed in the Bidding Forms- Table of Price Adjustment data, as approved by the Project Manager and stated in SCC. Indices shall be appropriate for their purpose and shall relate to the Contractor's proposed source of supply of inputs on the basis of which his Contract shall have been computed. As the proposed basis for price adjustment, the Contractor shall have submitted with his bid the tabulation of Weightings and Source of Indices in the Bidding Forms, which shall be subject to approval by the Project Manager.
	53.4 Base, Current and Provisional Indices: The base cost indices or prices shall

[10] For complex Works involving several types of construction work with different inputs, a family of Formulae will be necessary. The various items of Day work may also require different formulae, depending on the nature and source of the inputs

[11] Insert a figure for factor A only where there is a part of the Contractors' expenditures which will not be subject to fluctuation in cost or to compensate for the unreliability of some indices. A should normally be 0.15. The sum of A, b, c, d, etc., should be one.

Government of Nepal
Ministry of Infrastructure Development
Department of Roads
Road Division Butwal
Butwal, Rupandehi
Office Chief

be those prevailing on the day 30 days prior to the latest date for submission of bids. Current indices or prices shall be those prevailing on the day 30 days prior to the last day of the period to which a particular Interim Payment Certificate is related. If at any time the current indices are not available, provisional indices as determined by the Project Manager will be used, subject to subsequent correction of the amounts paid to the Contractor when the current indices become available.

53.5 Weightings: The weightings for each of the factors of cost given in the Bidding Forms shall be adjusted if, in the opinion of the Project Manager, they have been rendered unreasonable, unbalanced or inapplicable as a result of varied or additional work already executed or instructed under Clause 46 or for any other reason.

53.6 Where, price adjustment provision is not applicable pursuant to Sub-clause 53.1 then the Contract is subject to price adjustment only for construction material in accordance with this clause. If the prices of the construction materials stated in the contract is increased or decreased in an unexpected manner in excess of ten (10%) percent in comparison to the base price construction material stated in Section –IV, Bidding Forms-Table of Price Adjustment Data, then the price adjustment for the increase or decrease of price of the construction material beyond 10% shall be made by applying the following formulas:

For unexpected increase in price

$P = [R_1 - (R_0 \times 1.10)] \times Q$

For unexpected decrease in price P

$= [R_1 - (R_0 \times 0.90)] \times Q$

Where:

"P" is price adjustment amount

"R_1" is the present price of the construction material (Source of indices shall be those listed in the Bidding forms)

"R_0" is the base price of the construction material

"Q" is quantity of the construction material consumed in construction during the period of price adjustment consideration If the Base price and source is to be proposed by the Bidder as per the provision made in Section –IV, Bidding Forms-Table of Price Adjustment Data then the Base price and source filled by Bidder for the construction material stated in the Bidding Form shall be subject to the approval of the Project manager and shall be as **stated in SCC**.

53.7 The Price Adjustment amount shall be limited to a maximum of the initial Contract Amount **as specified in the SCC**.

53.8 The Price Adjustment provision shall not be applicable for delayed period if the contract is not completed in time due to the delay caused by the contractor or the contract is a Lump sum Contract.

Office Chief

54. Retention	54.1 The Employer shall retain from each payment due to theContractor the proportion **stated in the SCC** until Completion of the whole of the Works.
	54.2 Upon the issue of a Defects Liability Certificate by the Project Manager, **in accordance with GCC** 70.1, half the total amount retained shall be repaid to the Contractor and half when the Contractor has submitted the evidence of submission of tax return to the concerned Internal Revenue Office.
	54.3 The Contractor may substitute retention money with an unconditional bank guarantee issued from Commercial Bank or Financial Institution eligible to issue Bank Guarantee as per prevailing Law if: (a) at least eighty (80) percent of the whole works have been completed, (b) progress of the works is satisfactory in accordance with the Contract as per approved work schedule, and (c) it can be assured that the works can be completed at the intended completion date. The validity of the bank guarantee under this sub-clause shall be at least 30 days beyond the end of Defect Liability Period.
	54.4 If retention money is substituted by bank guarantee in accordance with clause 54.3, the bank guarantee shall be submitted either using the Retention Money Security Form included in Section X (Contract Forms) or in another Form acceptable to the employer. The validity of the bank guarantee shall be at least one month more than the end of defect liability period.
55. Liquidated Damages	55.1 The Contractor shall pay liquidated damages to the Employer at the rate per day **stated in the SCC** for each day that the Completion Date is later than the Intended Completion Date. The total amount of liquidated damages shall not exceed the amount **defined in the SCC**. The Employer may deduct liquidated damages from payments due to the Contractor. Payment of liquidated damages shall not affect the Contractor's liabilities.
	55.2 If the Intended Completion Date is extended after liquidated damages have been paid, the Project Manager shall correct any overpayment of liquidated damages by the Contractor by adjusting the next payment certificate. The Contractor shall be paid interest on the overpayment, calculated from the date of payment to the date of repayment, at the rates specified in GCC 49.
56. Bonus	56.1 The Contractor shall be paid a Bonus calculated at the rate per calendar day **stated in the SCC** for each day (less any days for which the Contractor is paid for acceleration) that the Completion is earlier than the Intended Completion Date. The Project Manager shall certify that the Works are complete, although they may not be due to be complete.
57. Advance Payment	57.1 Unless otherwise **stated in SCC,** the Employer shall make advance payment to the Contractor of the amounts stated in the SCC in a separate bank account maintained for the contract in two equal installments by the

Office Chief

	date **stated in the SCC**, against provision by the Contractor of an unconditional bank guarantee from Commercial Bank or Financial Institution eligible to issue Bank Guarantee as per prevailing Law in Nepal in a form acceptable to the Employer in amounts equal to the advance payment. The guarantee shall remain effective until the advance payment has been repaid, but the amount of the guarantee shall be progressively reduced by the amounts repaid by the Contractor. Interest shall not be charged on the advance payment. The validity of the bank guarantee under this sub-clause shall be at least 30 days beyond the end of intended completion date. The contractor shall submit the list of activities for which the Advance Payment for mobilization is to be used along with their time schedules.
	57.2 The Contractor is to use the advance payment only to pay for the purpose of construction site preparation, establishment of temporary camp facilities, construction of workers' housing, mobilization of labors, materials or equipment etc. required specifically for execution of the Contract. The Contractor shall demonstrate that advance payment has been used in this way by supplying copies of invoices or other documents to the Project Manager.
	57.3 The advance payment shall be repaid by deducting proportionate amounts, **as stated in SCC**, from payments otherwise due Contractor, following the schedule of completed percentages of the Works on a payment basis. No account shall be taken of the advance payment or its repayment in assessing valuations of work done, Variations, price adjustments, Compensation Events, Bonuses, or Liquidated Damages.
	57.4 If the advance provided under GCC 57.1 is not repaid due to non-performance of the works under the contract, by the Contractor within the time period specified in the Contract, the Employer shall recover the advance by enforcing the bank guarantee as provided under GCC 57.1, and shall also recover interest on the advance amount from the Contractor at a rate **stated in SCC.**
58. Securities	58.1 The Performance Security, including any additional security required as per ITB 35.5, shall be provided to the Employer no later than the date specified in the Letter of Acceptance and shall be issued in an amount **specified in the SCC,** by a Commercial Bank or Financial Institution eligible to issue Bank Guarantee as per prevailing Law in Nepal in accordance with the conditions of Contract using Sample Form for the Performance Security included in Section X (Contract Forms), or another form acceptable to the Employer, and denominated in Nepalese Rupees. The Performance Security shall be valid until a date 30 days beyond the end of the Defect Liability Period. However, any additional performance security required as per ITB 35.5 shall be valid until a date 30 days beyond the end of the intended completion date.
	58.2 The performance security issued by any foreign Bank outside Nepal must be counter guaranteed by Commercial Bank or Financial Institution eligible to issue Bank Guarantee as per prevailing Law in Nepal.
59. Dayworks	59.1 If applicable, the Dayworks rates in the Contractor's Bid shall be used for small additional amounts of work only when the Project Manager has given written instructions in advance for additional work to be paid for in that way.

Office Chief

	59.2 All work to be paid for as Dayworks shall be recorded by the Contractor on forms approved by the Project Manager. Each completed form shall be verified and signed by the Project Manager within two days of the work being done.
	59.3 The Contractor shall be paid for Dayworks subject to obtaining signed Dayworks forms.
60. Cost of Repairs	60.1 Loss or damage to the Works or Materials to be incorporated in the Works between the Start Date and the end of the Defects Correction periods shall be remedied by the Contractor at the Contractor's cost if the loss or damage arises from the Contractor's acts or omissions.
F. Force Majeure	
61. Definition of Force Majeure	61.1 In this Clause, "Force Majeure" means an exceptional event or circumstance, (a) which is beyond a Party's control; (b) which such Party could not reasonably have provided against before entering into the Contract; (c) which, having arisen, such Party could not reasonably have avoided or overcome; and (d) which is not substantially attributable to the other Party.
	61.2 Force Majeure may include, but is not limited to, exceptional events or circumstances of the kind listed below, so long as conditions (a) to (d) above are satisfied: (a) war, hostilities (whether war be declared or not), invasion, act of foreign enemies; (b) rebellion, terrorism, sabotage by persons other than the Contractor's Personnel, revolution, insurrection, military or usurped power, or civil war; (c) riot, commotion, disorder, strike or lockout by persons other than the Contractor's Personnel; (d) munitions of war, explosive materials, ionizing radiation or contamination by radio-activity, except as may be attributable to the Contractor's use of such munitions, explosives, radiation or radio-activity; and (e) natural catastrophes such as earthquake, hurricane, typhoon or volcanic activity.
62. Notice of Force Majeure	62.1 If a Party is or will be prevented from performing its substantial obligations under the Contract by Force Majeure, then it shall give notice to the other Party of the event or circumstances constituting the Force Majeure and shall specify the obligations, the performance of which is or will be prevented. The notice shall be given within 14 days after the Party became aware, or

Office Chief

	should have become aware of the relevant event or circumstance constituting Force Majeure.
	62.2 The Party shall, having given notice, be excused performance of its obligations for so long as such Force Majeure prevents it from performing them.
	62.3 Notwithstanding any other provision of this Clause, Force Majeure shall not apply to obligations of either Party to make payments to the other Party under the Contract.
63. Duty to Minimize Delay	63.1 Each Party shall at all times use all reasonable endeavors to minimize any delay in the performance of the Contract as a result of Force Majeure.
	63.2 A Party shall give notice to the other Party when it ceases to be affected by the Force Majeure.
64. Consequences of Force Majeure	64.1 If the Contractor is prevented from performing its substantial obligations under the Contract by Force Majeure of which notice has been given under GCC 62, and suffers delay and/or incurs Cost by reason of such Force Majeure, the Contractor shall be entitled subject to GCC 30 to (a) an extension of time for any such delay, if completion is or will be delayed, under GCC35; and (b) if the event or circumstance is of the kind described in sub-paragraphs (a) to (d) of GCC 61.2 and, in the case of subparagraphs (b) to (d), occurs in the Country, payment of any such Cost, including the costs of rectifying or replacing the Works and/or Goods damaged or destructed by Force Majeure, to the extent they are not indemnified through the insurance policy referred to in GCC 19.
	64.2 After receiving this notice, the Project Manager shall proceed in accordance with GCC 10 to agree or determine these matters.
65. Force Majeure Affecting Subcontractor	65.1 If any Subcontractor is entitled under any contract or agreement relating to the Works to relief from force majeure on terms additional to or broader than those specified in this Clause, such additional or broader force majeure events or circumstances shall not excuse the Contractor's nonperformance or entitle him to relief under this Clause.
66. Optional Termination, Payment and Release	66.1 If the execution of substantially all the Works in progress is prevented for a continuous period of 90 days by reason of Force Majeure of which notice has been given under GCC 62, or for multiple periods which total more than 150 days due to the same notified Force Majeure, then either Party may give to the other Party a notice of termination of the Contract. In this event, the termination shall take effect 7 days after the notice is given, and the Contractor shall proceed in accordance with GCC 72.5.
	66.2 Upon such termination, the Project Manager shall determine the value of the work done and issue a Payment Certificate, which shall include

Office Chief

	(a) the amounts payable for any work carried out for which a price is stated in the Contract; (b) the Cost of Plant and Materials ordered for the Works which have been delivered to the Contractor, or of which the Contractor is liable to accept delivery: this Plant and Materials shall become the property of (and be at the risk of) the Employer when paid for by the Employer, and the Contractor shall place the same at the Employer's disposal; (c) other Costs or liabilities which in the circumstances were reasonably and necessarily incurred by the Contractor in the expectation of completing the Works; (d) the Cost of removal of Temporary Works and Contractor's Equipment from the Site and the return of these items to the Contractor's works in his country (or to any other destination at no greater cost); and (e) the Cost of repatriation of the Contractor's staff and labor employed wholly in connection with the Works at the date of termination.
67. Release from Performance	67.1 Notwithstanding any other provision of this Clause, if any event or circumstance outside the control of the Parties (including, but not limited to, Force Majeure) arises, which makes it impossible or unlawful for either or both Parties to fulfill its or their contractual obligations or which, under the law governing the Contract, entitles the Parties to be released from further performance of the Contract, then upon notice by either Party to the other Party of such event or circumstance, (a) the Parties shall be discharged from further performance, without prejudice to the rights of either Party in respect of any previous breach of the Contract; and (b) the sum payable by the Employer to the Contractor shall be the same as would have been payable under GCC 66 if the Contract had been terminated under GCC 66.
G. Finishing the Contract	
68. Completion	68.1 The Contractor shall request the Project Manager to issue a certificate of Completion of the Works, and the Project Manager shall do so upon deciding that the work is completed.
	68.2 In addition to the other provisions, before acceptance of the completed works, Employer shall verify and assure that such works are within the set objective, quality and appropriate to operate and use.
69. Taking Over	69.1 In the contractor's Opinion, if the works are complete and ready for taking over, the contractor may apply by notice to the Project Manager for a Taking-Over Certificate. If the Works are divided into Sections, the Contractor may similarly apply for a Taking-Over Certificate for each Section. 69.2 The Project Manager shall, within 30 days after receiving the Contractor's application: (a) issue the Taking-Over Certificate to the Contractor if physical progress of works is at least ninety (90) percent in accordance with the Contract except for any minor outstanding work and defects (as listed in the

Office Chief

	Taking-Over Certificate) which will not substantially affect the use of the Works or Section for their intended purpose (either until or whilst this work is completed and these defects are remedied); or (b) reject the application, giving reasons and specifying the work required to be done by the Contractor to enable the Taking-Over Certificate to be issued. The Contractor shall then complete this work before issuing a further notice under this Sub-Clause. 69.3 If the Engineer fails either to issue the Taking-Over Certificate or to reject the Contractor's application within the period of 30 days, and if the Works or Section (as the case may be) are substantially completed in accordance with the Contract, the Taking-Over Certificate shall be deemed to have been issued on the last day of that period.
70. Final Account	70.1 The Contractor shall supply the Project Manager with a detailed account of the total amount that the Contractor considers payable under the Contract before the end of the Defects Liability Period. The Project Manager shall issue a Defects Liability Certificate and certify any final payment that is due to the Contractor within 60 days of receiving the Contractor's account if it is correct and complete. If it is not, the Project Manager shall issue within 60 days a schedule that states the scope of the corrections or additions that are necessary. If the Final Account is still unsatisfactory after it has been resubmitted, the Project Manager shall decide on the amount payable to the Contractor and issue a payment certificate.
71. Operating and Maintenance Manuals	71.1 If "as built" Drawings and/or operating and maintenance manuals are required, the Contractor shall supply them by the **dates stated in the SCC**.
	71.2 If the Contractor does not supply the Drawings and/or manuals by the dates **stated in the SCC** pursuant to **GCC 71.1,** or they do not receive the Project Manager's approval, the Project Manager shall withhold the amount **stated in the SCC** from payments due to the Contractor.
72. Termination	72.1 The Employer may terminate the Contract at any time if the contractor; a. does not commence the work as per the Contract, b. abandons the work without completing, c. fails to achieve progress as per the Contract.
	72.2 The Employer or the Contractor may terminate the Contract if the other party causes a fundamental breach of the Contract.
	72.3 Fundamental breaches of Contract shall include, but shall not be limited to, the following: a. the Contractor uses the advance payment for matters other than the contractual obligations, b. the Contractor stops work for 30 days when no stoppage of work is shown on the current Program and the stoppage has not been authorized by the Project Manager; c. the Project Manager instructs the Contractor to delay the progress of the Works, and the instruction is not withdrawn within 30 days; d. the Employer or the Contractor is made bankrupt or goes into liquidation other than for a reconstruction or amalgamation. e. a payment certified by the Project Manager is not paid by the Employer to the Contractor within 90 days of the date of the Project Manager's certificate; f. the Project Manager gives Notice that failure to correct a particular Defect

	is a fundamental breach of Contract and the Contractor fails to correct it within a reasonable period of time determined by the Project Manager; g. the Project Manager gives two consecutive Notices to update the Program and accelerate the works to ensure compliance with GCC Sub clause 22.1 and the Contractor fails to update the Program and demonstrate acceleration of the works within a reasonable period of time determined by the Project Manager; h. the Contractor does not maintain a Security, which is required; i. the Contractor has delayed the completion of the Works by the number of days for which the maximum amount of liquidated damages can be paid, **as defined in the SCC**; and j. If the Contractor, in the judgment of the Employer has engaged in corrupt or fraudulent practices in competing for or in executing the Contract, pursuant to GCC 73.1. k. If the Contractor fails to submit Performance Security, Advanced Payment Guarantee (if any) and Insurance Policy documents even after the time period indicated in GCC 35.3.
	72.4 When either party to the Contract gives notice of a breach of Contract to the Project Manager for a cause other than those listed under GCC 72.3 above, the Project Manager shall decide whether the breach is fundamental or not.
	72.5 Notwithstanding the above, the Employer may terminate the Contract for convenience.
	72.6 If the Contract is terminated, the Contractor shall stop work immediately, make the Site safe and secure, and leave the Site as soon as reasonably possible.
73. Fraud and Corruption	73.1 If the Employer determines that the Contractor has engaged in corrupt, fraudulent, collusive, coercive or obstructive practices, in competing for or in executing the Contract, then the Employer may, after giving 15 days' notice to the Contractor, terminate the Contractor's employment under the Contract and expel him from the Site.
	73.2 Should any employee of the Contractor be determined to have engaged in corrupt, fraudulent, collusive, coercive, or obstructive practice during the execution of the Works, then that employee shall be removed in accordance with GCC Clause 15. For the purposes of this GCC 73; (i) "corrupt practice" is the offering, giving, receiving or soliciting, directly or indirectly, of anything of value to influence improperly the actions of another party. (ii) "fraudulent practice"[5] is any act or omission, including a misrepresentation, that knowingly or recklessly misleads, or attempts to mislead, a party to obtain a financial or other benefit or to avoid an obligation; (iii) "collusive practice"[6] is an arrangement between two or more parties designed to achieve an improper purpose, including to influence improperly the actions of another party; (iv) "coercive practice"[7] is impairing or harming, or threatening to impair or harm, directly or indirectly, any party or the property of the party to influence improperly the actions of a party;

Office Chief
Water Supply and Sewerage Management Office
Butwal, Rupandehi

	(v) "obstructive practice" is (aa) deliberately destroying, falsifying, altering or concealing of evidence material to the investigation or making false statements to investigators in order to materially impede a investigation into allegations of a corrupt, fraudulent, coercive or collusive practice; and/or threatening, harassing or intimidating any party to prevent it from disclosing its knowledge of matters relevant to the investigation or from pursuing the investigation; or (bb) acts intended to materially impede the exercise of the GON's/DP's inspection and audit rights provided for under GCC28.3.
	73.3 The contractor shall be prosecuted for offenses under prevailing criminal laws, if the contractor: (i) Misuses the Advance Payment or payments received from the Employer; (ii) Receives payment by submitting false information or documents; (iii) Abandons the works before completion; (iv) Commits a serious violation of the contract; or (v) Causes loss or damage to the Employer.
74. Black Listing	74.1 Without prejudice to any other rights of the Employer under this Contract, GoN, Public Procurement Monitoring Office (PPMO), on the recommendation of procuring entity, may blacklist a Bidder or contractor for its conduct for a period of one (1) to three (3) years on the following grounds and seriousness of the act committed by the bidder or contractor: (a) if it is established that the Contractor has committed substantial defect in implementation of the contract or has not substantially fulfilled its obligations under the contract or the completed work is not of the specified quality as per the contract. (b) If convicted from a court of law in a criminal offense liable to be disqualified for taking part in procurement contract, (c) If it is established that the Contractor has engaged in corrupt or fraudulent practices in competing for or in executing the Contract.
75. Payment upon Termination	75.1 If the Contract is terminated because of a fundamental breach of Contract by the Contractor, the Project Manager shall issue a certificate for the value of the work done and Materials ordered less advance payments received up to the date of the issue of the certificate. Additional Liquidated Damages shall not apply. If the total amount due to the Employer exceeds any payment due to the Contractor, the difference shall be a debt payable to the Employer.
	75.2 If the Contract is terminated for the Employer's convenience or because of a fundamental breach of Contract by the Employer, the Project Manager shall issue a certificate for the value of the work done, Materials ordered, the reasonable cost of removal of Equipment, repatriation of the Contractor's personnel employed solely on the Works, and the Contractor's costs of protecting and securing the Works, and less advance payments received up to the date of the certificate.
	75.3 If the Contract is terminated because of fundamental breach of Contract or for any other fault by the Contractor, the Employer may: (a) withhold further payments to the Contractor until the costs of design, execution, completion and remedying of any defects, liquidated damages (if any), and all other costs incurred by the Employer, have been established, and/or

Office Chief

	(b) recover from the Contractor any losses and damages incurred by the Employer and any additional costs of completing the Works, after allowing for any sum due to the Contractor, as Government dues. After recovering any such losses, damages and extra costs, the Employer shall pay any balance to the Contractor. (c) forfeit the Performance Security. If the total amount due to the Employer exceeds any payment due to the Contractor, the difference shall be a debt payable to the Employer.
76. Property	76.1 All Materials on the Site, Plant, Equipment, Temporary Works, and Works shall be deemed to be the property of the Employer if the Contract is terminated because of the Contractor's default.
77. Release from Performance	77.1 If the Contract is frustrated by the outbreak of war or by any other event entirely outside the control of either the Employer or the Contractor, the Project Manager shall certify that the Contract has been frustrated. The Contractor shall make the Site safe and stop work as quickly as possible after receiving this certificate and shall be paid for all work carried out before receiving it and for any work carried out afterwards to which a commitment was made.
78.Suspension of DP Loan/Credit/ Grant	78.1 In the event that the DP suspends the loan/ credit/grant to the Employer from which part of the payments to the Contractor are being made: a. the Employer is obligated to notify the Contractor of such suspension within 7 days of having received the DP's suspension notice; and b. if the Contractor has not received sums due him within the 30 days for payment provided for in GCC 49.1, the Contractor may immediately issue a 15-day termination notice.
79. Eligibility	79.1 The Contractor shall have the nationality of an eligible country as specified in Section V of the bidding document. The Contractor shall be deemed to have the nationality of a country if the Contractor is a citizen or is constituted, or incorporated, and operates in conformity with the provisions of the laws of that country. This criterion shall also apply to the determination of the nationality of proposed subcontractors or suppliers for any part of the Contract including related services.
	79.2 The materials, equipment, and services to be supplied under the Contract shall have their origin in eligible source countries as specified in Section V of the bidding document and all expenditures under the Contract will be limited to such materials, equipment, and services. At the Employer's request, the Contractor may be required to provide evidence of the origin of materials, equipment, and services.
	79.3 For purposes of GCC 79.2, "origin" means the place where the materials and equipment are mined, grown, produced, or manufactured, and from which the services are provided. Materials and equipment are produced when, through manufacturing, processing, or substantial or major assembling of components, a commercially recognized product results that differs substantially in its basic characteristics or in purpose or utility from its components.
80. Project Manager's Duties and Authorities	80.1 The Project Manager's duties and authorities are restricted to the extent as **stated in the SCC**.

81. Quarries and Spoil Dumps	81.1 Any quarry operated as part of this Contract shall be maintained and left in a stable condition without steep slopes and be either refilled or drained and be landscaped by appropriate planting. Rock or gravel taken from a river shall be removed over some distance so as to limit the depth of material removed at any one location, not disrupt the river flow or damage or undermine the river banks. The Contractor shall not deposit excavated material on land in Government or private ownership except as directed by the Project Manager in writing or by permission in writing of the authority responsible for such land in Government ownership, or of the owner or responsible representative of the owner of such land in private ownership, and only then in those places and under such conditions as the authority, owner or responsible representative may prescribe.
82. Local Taxation	82.1 The prices bid by the Contractor shall include all taxes that may be levied in accordance to the laws and regulations in being in Nepal on the date 30 days prior to the closing date for submissions of Bids on the Contractor's equipment, plant and materials acquired for the purpose of the Contract and on the services performed under the Contract. Nothing in the Contract shall relieve the Contractor from his responsibility to pay any tax that may be levied in Nepal on profits made by him in respect of the Contract.
83. Value Added Tax	83.1 The Contract is not exempted from value added tax. An amount specified in the schedule of taxes shall be paid by the Contractor in the concerned VAT office within time frame specified in VAT regulation.
84. Income Taxes on Staff	84.1 The Contractor's staff, personnel and labor will be liable to pay personal income taxes in Nepal in respect of their salaries and wages, as are chargeable under the laws and regulations for the time being in force, and the Contractor shall perform such duties in regard to such deductions as may be imposed on him by such laws and regulations.
	84.2 The issue of the Final Account Certificate pursuant to clause GCC 70 shall be made only upon submittal by the Contractor of a certificate of income tax clearance from the Government of Nepal.
85. Duties, Taxes and Royalties	85.1 Any element of royalty, duty or tax in the price of any goods including fuel oil, and lubricating oil, cement, timber, iron and iron goods locally procured by the Contractor for the works shall be included in the Contract rates and prices and no reimbursement or payment in that respect shall be made to the Contractor.
	85.2 The Contractor shall familiarize himself with GON the rules and regulations with regard to customs, duties, taxes, clearing of goods and equipment, immigration and the like, and it will be necessary for him to follow the required procedures regardless of the assistance as may be provided by the Employer wherever possible.
	85.3 The Contractor shall pay and shall not be entitled to the reimbursement of cost of extracting construction materials such as sand, stone/boulder, gravel, etc. from the river beds or quarries. Such prices will be levied by concerned Local Government as may be in force at the time. The Contractor, sub-contractor(s) employed directly by him and for whom he is responsible, will not be exempted from payment of royalties, taxes or other kinds of surcharges on these construction materials so extracted and paid for to the concerned Local Government.
86. Member of Government, etc, not	86.1 No member or officer of GoN or the Employer or the Project Manager or any of their respective employees shall be in any way personally bound or liable for the act or obligations of the Employer under the Contract or answerable for

Office Chief

Personally Liable	any default or omission in the observance or performance of any of act, matter or thing which are herein contained.
87. Approval of Use of Explosives	87.1 No explosives of any kind shall be used by the Contractor without the prior consent of the Employer in writing and the Contractor shall provide, store and handle these and all other items of every kind whatsoever required for blasting operations, all at his own expense in a manner approved in writing by the Employer.
88 Compliance with Regulations for Explosives	88.1 The Contractor shall comply with all relevant ordinances, instructions and regulations which the Government, or other person or persons having due authority, may issue from time to time regarding the handling, transportation, storage and use of explosives.
89. Permission for Blasting	89.1 The Contractor shall at all times maintain full liaison with and inform well in advance, and obtain such permission as is required from all Government authorities, public bodies and private parties whatsoever concerned or affected, or likely to be concerned or affected by blasting operation.
90. Records of Explosives	90.1 Before the beginning of the Defects Liability Period, the Contractor shall account to the satisfaction of the Project Manager for all explosives brought on to the Site during the execution of the Contract and the Contractor shall remove all unused explosives from the Site on completion of works when ordered by the Project Manager.
91.Traffic Diversion	91.1 The Contractor shall include the necessary safety procedures regarding and pedestrian traffic diversion that is needed in execution of the works. The Contractor shall include in his costing of works, any temporary works or diversion that are needed during the construction period. All traffic diversion should be designed for the safety of both the motoring public and the men at work. It shall ensure the uninterrupted flow of traffic and minimum inconvenience to the public during the period concerned. As such, adequate warning signs, flagmen and other relevant safety precautionary measures shall be provided to warn motorists and pedestrians well ahead of the intended diversion as directed by the Project Manager. All traffic devices used shall be designed in accordance with the instruction of Project Manager.
92 Social Security Fund	92.1 The contractor shall enroll the laborers, employees, or other workforce engaged in such work in the Social Security Fund in accordance with prevailing laws.
	92.2 The contractor shall be responsible to disburse the remuneration, benefits, and other payments of the laborers, employees, or workforce into the bank account of the concerned individual.
	92.3 The contractor shall be responsible for ensuring that the required work permit has been obtained in accordance with prevailing laws in respect of foreign personnel.,

Office Chief

Section IX: Special Conditions of Contract

The following Special Conditions of Contract shall supplement the GCC. Whenever there is a conflict, the provisions herein shall prevail over those in the GCC.

Water Supply and Sewerage Management Office, Butwal

Name of Project: Construction of Entire Works of Imiliya Water Supply Project, Buddhabhumi-09, Kapilvastu

Contract Identification No.:

02/083-84/NCB/Works/C/WSSMOBTL

Special Conditions of Contract

A. General	
GCC 1.1 (p)	The Employer is ***Water Supply and Sewerage Management Office, Butwal.***
GCC 1.1 (u)	The Intended Completion Date for the whole of the Works shall be: ***730 Calender Days from Start.***
GCC 1.1(bb) & GCC10.1	The Project Manager is The Office Chief, WSSMO Butwal. The Project Manager and Engineer are synonyms.
GCC 1.1 (ee)	The Site is located at ***Buddha Bhumi Municipality, Ward No. 09 and is defined in drawings No. 01.***
GCC 1.1 (hh)	The Start Date shall be **within 14 days after the date of Signing of Contract or the date of Site Possession whichever is earlier.**
GCC 1.1 (ll)	*The works consist of construction works of Deep Tubewell (DTW) - 3 Nos., Borehole Platform and Casing well Platform - 3 Nos., RCC Overhead tank (225 cum) - 1 Nos., RCC Ground Reservoir Tank – 1 No., Aeration Tower and Pressure Filter – 3 Nos., Valve Chambers – 35 Nos., Washout Chambers – 5 Nos., Guard House – 1 No., Pump House – 3 Nos., Office Building - 1 No., House Connections from PE pipes - 2379 Nos., Pipeline works and other associated works under project* ***Construction of Entire Works of Imiliya Water Supply Project, Buddhabhumi-09, Kapilvastu.***
GCC 2.2	Sectional Completions are: ***Not Applicable.***
GCC 2.3(i)	The following documents also form part of the Contract: (i) Preamble of Bill of Quantities (ii) Bid Addendum Documents, if any.
GCC 3.1	The language of the contract is **ENGLISH/NEPALI** The law that applies to the Contract is the law of NEPAL
GCC 11.1	The Project Manager ***"may"*** delegate any of his duties and responsibilities.
GCC 12.1 (a)	The agreed electronic transmission shall be fwssmpbutwal@gmail.com ***[E-mail of Employer] and ……..[E-mail of Contractor].***
GCC 13.1	**<u>For GoN Funded:</u>** **Maximum percentage of subcontracting permitted is 25% of the total contract amount** (without VAT but including PS). **Nature of Works that agreed to be subcontracted and Details of Sub-Contractors:** **Qualification Criteria** The proposed sub-contractor shall meet the following requirements: 1) Completion of 80% of the amount in NRs. with similar size and nature of the

Office Chief

	work being sub contracted 2) Average Annual Construction Turnover for the work being sub contracted should be at least 1.5 * V/T where V is the proposed value of sub contract and T is estimated time in year for which the intended sub-contracting work is to be completed. For intended Sub contracting work duration of up to 1 year, T shall be "1".
GCC 14.1	Schedule of other contractors: ***Not Applicable.***
GCC 19.1	The minimum insurance amounts and deductibles shall be: 1. The minimum cover for loss of or damage to the Works, Plant and Materials is: **115%** of the Contract Amount. 2. The maximum deductible for insurance of the Works and of Plant and Materials is: ***as per the provision of Nepal Insurance Authority.*** 3. The minimum cover for loss or damage to **immovable** Equipment/**plants** is: ***100 % (i.e Replacement Cost).*** 4. The maximum deductible for insurance of immovable Equipment/**plant** is: ***1% of sum insured.*** 5. The minimum **cover for loss of or damage to** other property is: ***NRs. 500,000.00*** with unlimited number of occurrences. 6. The maximum deductible for insurance of other property is: ***1% of sum Insured.*** 7. The minimum cover for personal injury or death insurance i. for the Contractor's employees is that specified in the Labor act of Nepal (i.e. NRs. 700,000.00) and ii. for other people is***: NRs.1,000,000.00 for each person*** with an unlimited number of occurrences.
GCC 20.1	Site Investigation Reports are: ***N/A.***
GCC 23.1	The following shall be designed by the Contractor: N/A.
GCC 24.2	*The Contractor shall comply with the Labour Act, 2074, Labour Rules, 2075, all applicable Nepal government occupational safety and health standards/directives and other OHS requirements contained in the Contract Documents.*
GCC 26.1	The Site Possession Date(s) shall be: ***with in 14 days from the date of signing of Contract.***
GCC 30.1	The place of arbitration shall be: ***Nepal Council of Arbitration (NEPCA), Jwagal, Lalitpur.***
	C. Time Control
GCC 34.1	The Contractor shall submit for approval a Program for the Works within **28 days** from the date of the Letter of Acceptance.
GCC 34.3	The period between Program updates is **90** days. The amount to be withheld for late submission of an updated Program is **NRs. 100,000.00.**
	D. Quality Control

Office Chief

GCC 42.1	The Defects Liability Period is: ***365*** days.
	E. Cost Control
GCC 49.1	***The Prevailing Interest rate is as per Nepal Rastra Bank.***
GCC 53.1	The Contract ***"is"*** subjected to price adjustment, and the following information regarding coefficients ***"does"*** apply.
	The coefficients and indices for adjustment of prices in Nepalese Rupees shall be as specified in the Table of Adjustment Data submitted by bidder together with the Letter of Price Bid which is approved by the Project manager and attached as Annex-1.
GCC 53.6	Base Price of Construction Materials applicable for price adjustment shall be as per the Table of Adjustment Data submitted by Bidder together with the Letter of Price Bid which is approved by the Project manager and attached as Annex-1.
GCC 53.7	The Price Adjustment amount shall be limited to a maximum of: For GoN Funded: ***25 %*** percentage of the initial Contract Amount (without VAT but including PS).
GCC 54.1	The proportion of payments retained is: 5 (five) percent.
GCC 55.1	The liquidated damages for the whole of the Works are 0.05 Percent of the final Contract Price (without VAT but including PS) per day. The maximum amount of liquidated damages for the whole of the Works is 10 Percent of the final Contract Price (without VAT but including PS).
GCC 56.1	The provision of bonus ***"Not Applicable"*** in the contract.
GCC 57.1	The provision of Advance Payments ***"Applicable"*** in the contract. The Advance Payments shall be: 20% percent of of the Accepted Contract Amount (without VAT but including PS) and shall be paid in two equal installments and to the Contractor. (i) 10% of the advance shall be paid within a month of contract signing after the submission of equivalent acceptable Bank Guarantee, Insurance Policies and after submission of program pursuant to GCC 34.1 work Schedule. (ii) additional 10% after Contractor completes the works that are valued at not less than 10 (Ten) % of the Contract price upon submission of equivalent acceptable Bank Guarantee. Payment of such advance payment will be paid under separate certification by the Project Manager (Engineer) after, (a) provision by the Contractor of an unconditional and irrevocable bank guarantee as per the format attached in amounts equal to the advance payment, (b) provision by the Contractor of the performance security and (c) Submission of Work Program (iii) The bank guarantee referred in item (a) above shall be obtained from a reputed bank acceptable to the Employer.

Government of Nepal Ministry of Urban Development Department of Water Supply and Sewerage Management Office Butwal, Rupandehi Office Chief

GCC 57.3	Deductions from Payment Certificates will commence in the first certificate in which the value of works executed exceeds 30% of the Contract Price. Deduction will be at the rate of ***20%*** of the respective Monthly Interim Payment Certificate until such time as the advance payment has been repaid; provided that the advance payment shall be completely repaid prior to the end of 80 % of the approved contract price.
GCC 57.4	Recover interest on the advance amount from the Contractor should be at a rate of **10 %**.
GCC 58.1	The Performance Security amount is: a) If bid price of the bidder selected for acceptance is up to 15% (fifteen) percent below the approved cost estimate, the performance security amount shall be 5% (five) percent of the bid price. b) For the bid price of the bidder selected for acceptance is more than 15%(fifteen) percent below of the cost estimate, the performance security amount shall be determined as follows: Performance security amount=[(0.85*Cost Estimate-Bid Price) *0.5]+ 5% of Bid Price C)For unbalanced/front loaded item rate bids, additional performance security shall be considered as per ITB 35.5 (8 percent of accepted Contract amount).
G. Finishing the Contract	
GCC 71.1	The date by which operating and maintenance manuals are required is; 30 days prior to the issue of the Construction Completion Certificate.
GCC 71.2	The date by which "as built" drawings are required is: ***30 days after work Acceptance date.*** The amount to be withheld for failing to produce "as built" drawings and/or Operating and maintenance manuals is: **NRs. 200,000.00.**
GCC 72.3 (i)	The maximum number of days is: **200.**
GCC 80	The Project Manager has to obtain the specific approval of the Employer for taking any of the following actions : a. Approving subcontracting of any part of the works under General Conditions of Contract Clause 13; b. Certifying additional costs determined under General Conditions of Contract Clause 50; c. Determining start date under General Conditions of Contract Clause 1; d. Determining the extension of the intended Completion Date under General Conditions of Contract Clause 35; e. Issuing a Variation under General Conditions of Contract Clause 1 and 46, except in an emergency situation, as reasonably determined by the Project Manager; emergency situation may be defined as the situation when protective measures must be taken for the safety of life or of the works or of adjoining property. f. Adjustment of rates under General Conditions of Contract Clause 45;

Office Chief

Section X: Contract Forms

This Section contains forms which, once completed, will form part of the Contract. The forms for Performance Security and when required Advance Payment Security and Retention Money Security shall only be completed by the successful Bidder after contract award.

Government of Nepal
Ministry of Water Supply and Sewerage Development
Office of Water Supply and Sewerage Management Office
Butwal, Rupandehi

Office Chief

Letter of Intent

[on letterhead paper of the Employer]

Date: ... .

To: .....*Name and address of the Contractor*.....

Subject: ..... Issuance of letter of intent to award the contract.....

This is to notify you that, it is our intention to award the contract .....***[insert date]*** .....for execution of the .....***[insert name of the contract and identification number, as given in the Contract Data/SCC]*** to you as your bid price Nepalese Rupees ..... ***[insert amount of contract price in figures and words including taxes]*** as corrected and modified in accordance with the Instructions to Bidders is hereby selected as substantially responsive evaluated bid closest to the Average Bid Price.

Authorized Signature: .....

Name: ... .

Title: .....

CC:

[Insert name and address of all other Bidders, who submitted the bid]

[Notes on Letter of Intent

The issuance of Letter of Intent is the information of the selection of the bid of the successful bidder by the Employer and for providing information to other unsuccessful bidders who participated in the bid as regards to the outcome of the procurement process. This standard form of Letter of Intent to Award should be filled in and sent to the successful Bidder only after evaluation and selection of substantially responsible evaluated bid closest to the Average Bid Price.]

Office Chief

Letter of Acceptance

[on letterhead paper of the Employer]

Date: ……..

To: ……*Name and address of the Contractor*……..

Subject: ……*Notification of Award*

This is to notify that your Bid for the Invitation of Bids dated .....[***Insert date of bid invitation]*** ……..for execution of the……..[***Insert name of the contract and identification number, as given in the Contract BDS/SCC]*** …….. for the Contract price of Nepalese Rupees ***[insert amount of contract price in figures and words including taxes],*** as corrected in accordance with the Instructions to Bidders is hereby accepted in accordance with the Instruction to Bidders.

You are hereby instructed to contact this office to sign the formal contract agreement within 15 days with Performance Security of **NRs**. ……. in accordance with the Conditions of Contract, using for that purpose the Performance security Form included in Section X (Contract Forms) of this Bidding Document.

Authorized Signature: ……...

Name and Title of Signatory: ……

Office Chief

Contract Agreement

THIS AGREEMENT made the .....day of.....between..... name of the Employer .....*(hereinafter "the Employer"),* of the one part, and .....name of the Contractor .....(hereinafter "the Contractor"), of the other part:

WHEREAS the Employer desires that the Works known as ..... name of the Contract .....should be executed by the Contractor, and has accepted a Bid by the Contractor for the execution and completion of these Works and the remedying of any defects in the sum of NRs .....***[insert amount of contract price in words and figures including taxes]***(hereinafter "the Contract Price").

The Employer and the Contractor agree as follows:

1. In this Agreement words and expressions shall have the same meanings as are respectively assigned to them in the Contract documents referred to.

2. The following documents shall be deemed to form and be read and construed as part of this Agreement. This Agreement shall prevail over all other Contract documents.
   (a) the Letter of Acceptance;
   (b) the Letters of Technical and Price Bid;
   (c) the Addenda Nos ..... ***Insert addenda numbers if any*** .....
   (d) the Special Conditions of Contract;
   (e) the List of Eligible Countries that was specified in Section V of the bidding document,
   (f) the General Conditions of Contract;
   (g) the Specification;
   (h) the Drawings;
   (i) Bill of Quantities (or Schedules of Prices for lump sum contracts), and
   (j) Table of Price Adjustment Data
   (k) List of Approved Subcontractors *[For GoN funded project]*
   (l) .....***[Specify if there are any other document]***

3. In consideration of the payments to be made by the Employer to the Contractor as indicated in this Agreement, the Contractor hereby covenants with the Employer to execute the Works and to remedy defects therein in conformity in all respects with the provisions of the Contract.

4. The Employer hereby covenants to pay the Contractor in consideration of the execution and completion of the Works and the remedying of defects therein; the Contract Price or such other sum as may become payable under the provisions of the Contract at the times and in the manner prescribed by the Contract.

IN WITNESS whereof the parties hereto have caused this Agreement to be executed in accordance with the laws of Nepal on the day, month and year indicated above.

Signed by .....
for and on behalf the Contractor in the presence of

Witness, Name Signature, Address, Date

Signed by.....
for and on behalf of the Employer in the presence of

Witness, Name, Signature, Address, Date

Office Chief

Ministry of Infrastructure and Transport
Department of Water Supply and Sewerage Management
Water Supply and Sewerage Office
Butwal, Rupandehi

List of Approved Subcontractors

In accordance with GCC Sub-Clause 13.1, The following Subcontractors are approved for carrying out the work as specified below.

Name of Subcontractors	Description of Works	Value/Percentage of subcontract

Office Chief

Performance Security

(On letterhead paper of the Bank)

..... ***Bank's Name, and Address of Issuing Branch or Office*** .....

Beneficiary: ..... ***[insert Name and Address of Employer***].....

Date: .....

Performance Guarantee No.:.....

We have been informed that ... ... ***[insert name of the Contractor, which in the case of a joint venture shall be the name of the joint venture]*** (hereinafter called "the Contractor") has been notified by you to sign the Contract No. ..... ***[insert reference number of the Contract]***, for the execution of ..... ***[insert name of contract and brief description of Works]*** (hereinafter called "the Contract").

Furthermore, we understand that, according to the conditions of the Contract, a performance guarantee is required.

At the request of the Contractor, we..... ***[insert name of the Bank]*** ....., hereby irrevocably undertake to pay you any sum or sums not exceeding in total an amount of Nepalese Rupees.....***[insert amount in figures*and amount in words]*.....** such sum being payable in Nepalese Rupees, upon receipt by us of your first demand in writing accompanied by a written statement stating that the Contractor is in breach of its obligation(s) under the Contract, without your needing to prove or to show grounds for your demand or the sum specified therein.

This guarantee shall expire, no later than the..... ***[[insert day].*** Day of ***.....[[insert month, year]***, **, and any demand for payment under it must be received by us at this office on or before that date.

This guarantee is subject to the Uniform Rules for Demand Guarantees (URDG), 2010 Revisions, ICC Publication No. 758, except that the supporting statement under Article 15(a) is hereby excluded.

.....

Seal of Bank and Signature(s)

Note:

All italicized text is for guidance on how to prepare this demand guarantee and shall be deleted from the final document.

* *The Guarantor shall insert an amount representing the percentage of the Contract Price specified in the Contract in Nepalese Rupees.*

** *Insert the date thirty days after the date specified for the Defect Liability Period. The Employer should note that in the event of an extension of the time for completion of the Contract, the Employer would need to request an extension of this guarantee from the Guarantor. Such request must be in writing and must be made prior to the expiration date established in the guarantee.*

Office Chief

Advance Payment Security

(On letterhead paper of the Bank)

..... ***Bank's Name, and Address of Issuing Branch or Office*.....**

Beneficiary: .....***[insert Name and address of employer]***

Date : .....

Advance Payment Guarantee No.....

We have been informed that ..... ***[insert name of the Contractor, which in the case of a joint venture shall be the name of the joint venture]*** ..... (hereinafter called "the Contractor") has entered into Contract No. .....***[insert refrence number of the contract]*** dated .....***[date]***..... with you, for the execution of .....*[**insert** name of contract and brief description of Works]* ..... (hereinafter called "the Contract").

Furthermore, we understand that, according to the Conditions of the Contract, an advance payment in the sum Nepalese Rupees ..... ***[Insert amount in figures*and in words]*** is to be made against an advance payment guarantee.

At the request of the Contractor, we..... ***[insert name of the Bank]*** ....., hereby irrevocably undertake to pay you any sum or sums not exceeding in total an amount of Nepalese Rupees .....***[insert amount in figures* and amount in words]*** upon receipt by us of your first demand in writing accompanied by a written statement stating that the Contractor is in breach of its obligation under the Contract because the Contractor:

(a) Used the advance payment for purposes other than the costs of mobilization in respect of the Works; or

(b) Has failed to repay the advance payment when it has become due and payable in accordance with the conditions of the contract, specifying the amount payable by the contractor.

The maximum amount of this guarantee shall be progressively reduced by the amount of the advance payment repaid by the Contractor as indicated in copies of interim statements or payment certificates which shall be presented to us. This guarantee shall expire, at the latest, upon our receipt of a copy of the interim payment certificate indicating that eighty (80) percent of the Contract Price has been certified for payment, or on the .....***[date]***..... day of ...***[month],[year]***...**, whichever is earlier. Consequently, any demand for payment under this guarantee must be received by us at this office on or before that date.

This guarantee is subject to the Uniform Rules for Demand Guarantees (URDG), 2010 Revisions, ICC Publication No. 758, except that the supporting statement under Article 15(a) is hereby excluded.

.....

Seal of Bank and Signature(s)

Note:

All italicized text is for guidance on how to prepare this demand guarantee and shall be deleted from the final document.

**The Guarantor shall insert an amount representing the amount of the advance payment in Nepalese Rupees of the advance payment as specified in the Contract.*

*** Insert the date Thirty days after the intended completion date. The Employer should note that in the event of an extension of the time for completion of the Contract, the Employer would need to request an extension of this guarantee from the Guarantor. Such request must be in writing and must be made prior to the expiration date established in the guarantee.*

Office Chief

Retention Money Security

(On letterhead paper of the Bank)

..... *Bank's Name, and Address of Issuing Branch or Office*.....

Beneficiary: _____ *[Insert name and Address of Employer]*

Date: _____ *[Insert date of issue]*

RETENTION MONEY GUARANTEE No.: *[Insert guarantee reference number]*

We have been informed that _____ ***[insert name of Contractor, which in the case of a joint venture shall be the name of the joint venture]*** (hereinafter called "the Contractor") has entered into Contract No. _____ ***[insert reference number of the contract]*** dated _____ with the Beneficiary, for the execution of _____ ***[insert name of contract and brief description of* Works*]*** (hereinafter called "the Contract").

Furthermore, we understand that, according to the conditions of the Contract, the Beneficiary retains moneys up to the limit set forth in the Contract ("the Retention Money"), and that when at least eighty (80) percent of the whole works have been completed, progress of the works is satisfactory in accordance with the Contract as per approved work schedule and it can be assured that the works can be completed at the intended completion date, payment of ***[insert the amount of the Retention Money]*** is to be made against a Retention Money guarantee.

At the request of the Contractor, we, .. . ***[insert name of the Bank]*** .....,as Guarantor, hereby irrevocably undertake to pay the Beneficiary any sum or sums not exceeding in total an amount of Nepalese Rupees _____ ***[insert amount in figures and amount in words][1]]*** upon receipt by us of the Beneficiary's complying demand supported by the Beneficiary's statement, whether in the demand itself or in a separate signed document accompanying or identifying the demand, stating that the Contractor is in breach of its obligation(s) under the Contract, without your needing to prove or show grounds for your demand or the sum specified therein.

This guarantee shall expire no later than the .... day of ....., ... [2], and any demand for payment under it must be received by us at the office indicated above on or before that date.

This guarantee is subject to the Uniform Rules for Demand Guarantees (URDG), 2010 Revisions, ICC Publication No. 758, except that the supporting statement under Article 15(a) is hereby excluded.

_____

[Seal of Bank and signature(s)]

Note: All italicized text (including footnotes) is for use in preparing this form and shall be deleted from the final product.

---

[1] *The Guarantor shall insert the amount of the Retention Money.*

[2] *Insert the same expiry date which is 30 days more than the end of Defect Liability Period. The Employer should note that in the event of an extension of this date for completion of the Contract, the Employer would need to request an extension of this guarantee from the Guarantor. Such request must be in writing and must be made prior to the expiration date established in the guarantee.*

Office Chief

Annex-1

Table of Price Adjustment Data
[SCC 53.1]

Code	Index Description	Source of Index*	Base Value and Date	Employer's Proposed Weighting Range (coefficient)	Bidder's Proposed Weighting (coefficient)**
1	2	3	4	5	6
	Non - adjustable (A)			0.15	0.15
	Labor (b)				
	Materials (c)				
	Equipment usage (d)				
	…				
		Total			**1.00**

Note: Base value and Bidder's proposed weighting coefficient to be filled as per "Bid Form of Table of Price Adjustment Data" in Bidding Forms (Section-IV) after verification by the Employer in case of the alternative provision of Bidder proposed value and weighting coefficient.

Table of Price Adjustment Data
[SCC 53.6]

Code	Construction Material*	Unit	Base Price (NRs/Unit) ** (Ex-factory)	Source (Factory)**
1	2	3	4	5

** For the purpose of calculation of price adjustment, the Ex-factory price of the same source mentioned in the table shall be taken into consideration.

Note: Base Price and source to be filled as per "Bid Form of Table of Price Adjustment Data" in Bidding Forms (Section-IV) after verification by the Employer in case of the alternative provision of Bidder proposed source and base price.